NAVAIR 01-S3AAB-1.1

NATOPS WEAPON SYSTEM MANUAL NAVY MODEL S-3B AIRCRAFT

THIS PUBLICATION SUPERSEDES NAVAIR 01-S3AAB-1 DATED 15 SEPTEMBER 2000.
TO BE USED IN CONJUNCTION WITH NATOPS FLIGHT MANUAL NAVAIR 01-S3AAB-1 AND SUPPLEMENTAL NATOPS FLIGHT MANUAL NAVAIR 01-S3AAB-1A.

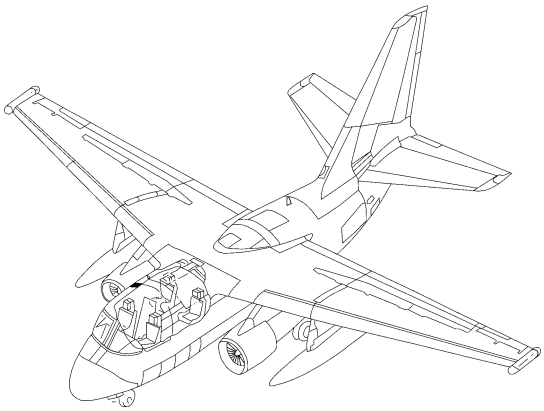

DISTRIBUTION STATEMENT C — Distribution authorized to U.S. Government Agencies and their contractors to protect publications required for official use or for administrative or operational purposes, determined on 1 August 1998. Other requests for this document shall be referred to Commanding Officer, Naval Air Technical Data Service Command, NAS North Island, Bldg. 90, P.O. Box 357031, San Diego, CA 92135-7031.

DESTRUCTION NOTICE — For unclassified, limited documents, destroy by any method that will prevent disclosure of contents or reconstruction of the document.

ISSUED BY AUTHORITY OF THE CHIEF OF NAVAL OPERATIONS AND
UNDER THE DIRECTION OF THE COMMANDER,
NAVAL AIR SYSTEMS COMMAND.

DATA PROCESSING 1
ARMAMENT 2
NAVIGATION 3
DATA LINK 4
NONACOUSTIC SENSORS 5
ACOUSTIC SENSORS 6
CUES 7
ALERTS 8
TABLEAUS 9
INDEX & FOLDOUTS

DEPARTMENT OF THE NAVY
CHIEF OF NAVAL OPERATIONS
2000 NAVY PENTAGON
WASHINGTON, D.C. 20350-2000

15 December 2002

LETTER OF PROMULGATION

1. The Naval Air Training and Operating Procedures Standardization (NATOPS) Program is a positive approach toward improving combat readiness and achieving a substantial reduction in the aircraft mishap rate. Standardization, based on professional knowledge and experience, provides the basis for development of an efficient and sound operational procedure. The standardization program is not planned to stifle individual initiative, but rather to aid the commanding officer in increasing the unit's combat potential without reducing command prestige or responsibility.

2. This manual standardizes ground and flight procedures but does not include tactical doctrine. Compliance with the stipulated manual requirements and procedures is mandatory except as authorized herein. In order to remain effective, NATOPS must be dynamic and stimulate rather than suppress individual thinking. Since aviation is a continuing, progressive profession, it is both desirable and necessary that new ideas and new techniques be expeditiously evaluated and incorporated if proven to be sound. To this end, commanding officers of aviation units are authorized to modify procedures contained herein, in accordance with the waiver provisions established by OPNAVINST 3710.7, for the purpose of assessing new ideas prior to initiating recommendations for permanent changes. This manual is prepared and kept current by the users in order to achieve maximum readiness and safety in the most efficient and economical manner. Should conflict exist between the training and operating procedures found in this manual and those found in other publications, this manual will govern.

3. Checklists and other pertinent extracts from this publication necessary to normal operations and training should be made and carried for use in naval aircraft.

M.J. McCABE
Rear Admiral, U.S. Navy
Director, Air Warfare

INTERIM CHANGE SUMMARY

The following Interim Changes have been cancelled or previously incorporated into this manual.

INTERIM CHANGE NUMBER(S)	REMARKS/PURPOSE
1 thru 2	Previously incorporated.

The following Interim Changes have been incorporated into this Change/Revision.

INTERIM CHANGE NUMBER(S)	REMARKS/PURPOSE

Interim Changes Outstanding — To be maintained by the custodian of this manual.

INTERIM CHANGE NUMBER	ORIGINATOR/DATE (or DATE/TIME GROUP)	PAGES AFFECTED	REMARKS/PURPOSE

Summary of Applicable Technical Directives/ECP Summary

Information relating to the following technical directives has been incorporated into this manual.

ECP NUMBER	DESCRIPTION	DATE INC. IN MANUAL	VISUAL IDENTIFICATION
S3-400 (AFC-208)	Weapon Improvement Program		S-3B MOD
S3-402 (AFC-226)	Main Landing Gear Downlock Latch and Nose Landing Gear Catapult Aircraft Holdback Fitting Revisions (Retrofit)		Main Landing Gear and Nose Landing Gear
S3-411 (AVC-4129)	AN/ALE-39 ECM Programmer Panel Modification		Mk 9254/ALE-39 ECM Programmer
S3-397 S3-405 (AFC-231)	Off-Line On Top Position Indicator		AN/A44-78 AN/A4A-50
S3-423 (AFC-281)	Communication Improvement Program		AN/ARC-187 AN/ARC-182

RECORD OF CHANGES

Change No. and Date of Change	Date of Entry	Page Count Verified by (Signature)

NATOPS Weapon System Manual
Navy Model S-3B Aircraft

CONTENTS

Page No.

PART I — DATA PROCESSING

CHAPTER 1 — DATA PROCESSING — AYK-10

1.1 DATA PROCESSING — AYK-10 1-1
1.1.1 Introduction 1-1
1.1.2 General Purpose Digital Computer 1-1
1.1.3 Digital Memory Unit/Transportable Cartridge 1-5

1.2 TACTICAL DISPLAY SYSTEM 1-8
1.2.1 Introduction 1-8
1.2.2 Universal Display Generator 1-8
1.2.3 Displays 1-10
1.2.4 Display Off-Line Controls 1-11
1.2.5 Power Control Panel 1-23

1.3 OPERATIONAL PROGRAM LOADING 1-23
1.3.1 Normal Load Procedures 1-23
1.3.2 Initialization 1-25
1.3.3 Program Loading Faults 1-26
1.3.4 Operational Continue Reload 1-28
1.3.5 Operational Program Degraded Modes 1-28
1.3.6 Program Degradation 1-30
1.3.7 Program/Avionics Shutdown 1-30
1.3.8 Power Transients 1-31
1.3.9 Data Extraction and Safe Data 1-31
1.3.10 In-Flight Performance Monitoring 1-31
1.3.11 Hook Table and Display Buffer 1-32

1.4 CUES 1-33
1.4.1 Data Entry Cues 1-33
1.4.2 Decision Cues 1-34
1.4.3 Function Activation Cues 1-34
1.4.4 Loader Cues 1-34

Page No.

1.5	ALERTS	1-34
1.5.1	Executive Program Alerts	1-35
1.5.2	System Alerts	1-35
1.5.3	Keyset Alerts	1-35
1.5.4	Function Alerts	1-36
1.5.5	Loader Alerts	1-36
1.5.6	Advisory Alerts	1-37
1.5.7	Recovery Alerts	1-37
1.6	DISPLAY SYMBOLOGY	1-37
1.6.1	Hook	1-37
1.6.2	Aircraft	1-37
1.6.3	Sonobuoy	1-37
1.6.4	Smoke	1-37
1.6.5	Sound Underwater Signal	1-37
1.6.6	Fly-To-Point	1-37
1.6.7	Reference Mark	1-38
1.6.8	Area Search Symbol	1-38
1.6.9	Classification Aids Cursor	1-38
1.6.10	Radar Detect Symbol	1-38
1.6.11	Weapon Splash Point	1-38
1.6.12	Enable Point	1-38
1.6.13	Destruct Point	1-38
1.6.14	Harpoon Waypoint	1-39
1.6.15	Harpoon Aim Point	1-39
1.6.16	Harpoon Waypoint Envelope — RBL Mode	1-39
1.6.17	Harpoon Waypoint Envelope — BOL Mode	1-39
1.6.18	Harpoon Destruct Point Envelope	1-39
1.6.19	Harpoon Release Envelope — BOL Mode with No Waypoint Selected	1-39
1.6.20	Harpoon Release Envelope — RBL Mode with No Waypoint Selected	1-39
1.6.21	Harpoon Release Envelope — Waypoint Selected	1-39
1.6.22	Harpoon DTOT Display Symbology	1-40
1.6.23	On Top	1-40
1.6.24	Datum (Local or Remote)	1-40
1.6.25	Lost Contact	1-40
1.6.26	Downed Aircraft (Local or Remote)	1-41
1.6.27	Distressed Vessel (Local or Remote)	1-41
1.6.28	CV	1-41
1.6.29	Nonsub (Local or Remote)	1-41
1.6.30	Remote Weapon Splash Point	1-41
1.6.31	Man-in-Water (Local or Remote) or PU Emergency Bailout	1-41
1.6.32	Return to Base (PU Emergency)	1-42
1.6.33	Basic Contact	1-42

Page No.

1.6.34 ESM Bearing Sector Inhibit 1-42
1.6.35 ESM Contact 1-42
1.6.36 ESM Emitter 1-42
1.6.37 ESM/ESM Computed Intersection Fix 1-42
1.6.38 ESM Threat Contact 1-43
1.6.39 Computer Intersection — Fix Dissimilar Sources 1-43
1.6.40 Continuous Predict 1-43
1.6.41 Single Predict 1-43
1.6.42 Basic Fix 1-44
1.6.43 Aircraft Own Track History 1-44
1.6.44 Fix History 1-45
1.6.45 Sonobuoy Contact Bearing 1-45
1.6.46 Vector 1-45
1.6.47 Range Radius Circle 1-45
1.6.48 Probability Contour 1-45
1.6.49 Latitude/Longitude 1-46
1.6.50 Latitude/Longitude (Grid Coordinate Reference) 1-46
1.6.51 ASW Search Center 1-46
1.6.52 Participating Unit 1-46

1.7 TACTICAL PLOT DISPLAY 1-46
1.7.1 Pilot Display 1-46
1.7.2 COTAC MPD 1-50
1.7.3 TACCO/SENSO MPD 1-52

1.8 INTEGRATED CONTROL SYSTEM 1-52
1.8.1 Introduction 1-52
1.8.2 Built-In Test Equipment 1-52
1.8.3 Trackball, Hook Verify, and Enter 1-52
1.8.4 Switch Lighting Conventions 1-53
1.8.5 INCOS Switch Actions 1-53
1.8.6 INCOS Switch Types 1-53
1.8.7 Keyset Functions 1-54
1.8.8 Display Control Functions 1-63

1.9 DATA PROCESSING OPTION SELECT FUNCTIONS 1-81
1.9.1 PRGM CONT Matrix 1-82
1.9.2 REDSPL Matrix 1-88
1.9.3 SEARCH MODE Matrix 1-91
1.9.4 TAC AIDS Matrix 1-95
1.9.5 SONO CONT Matrix 1-110

Page No.

1.9.6 PILOT DSPL Matrix 1-110
1.9.7 PTA/CON PTA Matrix 1-112
1.9.8 REINIT Matrix 1-113

1.10 TACTICAL DIAGNOSTIC/OPERATIONAL READINESS TESTS 1-116
1.10.1 Introduction 1-116
1.10.2 Tactical Diagnostic Tests 1-116
1.10.3 Operational Readiness Tests 1-116
1.10.4 DIA/ORT MATRIX 1-116
1.10.5 RADAR DIAGNOSTIC Option 1-117

CHAPTER 2 — DATA PROCESSING — AYK-23

2.1 DATA PROCESSING — AYK-23 2-1
2.1.1 Introduction 2-1
2.1.2 General Purpose Digital Computer 2-1
2.1.3 Digital Memory Unit/Transportable Cartridge 2-4

2.2 TACTICAL DISPLAY SYSTEM 2-8
2.2.1 Introduction 2-8
2.2.2 Universal Display Generator 2-8
2.2.3 Displays 2-9
2.2.4 Display Off-Line Controls 2-15
2.2.5 Power Control Panel 2-15

2.3 OPERATIONAL PROGRAM LOADING 2-15
2.3.1 Normal Load Procedures 2-15
2.3.2 Initialization 2-27
2.3.3 Program Loading Faults 2-28
2.3.4 Operational Continue Reload 2-28
2.3.5 Operational Program Degraded Modes 2-29
2.3.6 Program/Avionics Shutdown 2-29
2.3.7 Power Transients 2-29
2.3.8 Data Extraction and Safe Data 2-29
2.3.9 In-Flight Performance Monitoring 2-30
2.3.10 Hook Table and Display Buffer 2-31

2.4 CUES 2-31
2.4.1 Data Entry Cues 2-32
2.4.2 Decision Cues 2-32
2.4.3 Function Activation Cues 2-33
2.4.4 Loader Cues 2-33

Page No.

2.5 ALERTS 2-33
2.5.1 System Alerts 2-33
2.5.2 Keyset Alerts 2-34
2.5.3 Function Alerts 2-34
2.5.4 Loader Alerts 2-35
2.5.5 Advisory Alerts 2-35
2.5.6 Recovery Alerts 2-35

2.6 DISPLAY SYMBOLOGY 2-35
2.6.1 Hook 2-35
2.6.2 Aircraft 2-35
2.6.3 Sonobuoy 2-35
2.6.4 Smoke 2-36
2.6.5 Sound Underwater Signal 2-36
2.6.6 Fly-To-Point 2-36
2.6.7 Reference Mark 2-36
2.6.8 Area Search Symbol 2-36
2.6.9 Classification Aids Cursor 2-36
2.6.10 Radar Detect Symbol 2-36
2.6.11 Weapon Splash Point 2-36
2.6.12 Enable Point 2-37
2.6.13 Destruct Point 2-37
2.6.14 Harpoon Waypoint 2-37
2.6.15 Harpoon Aim Point 2-37
2.6.16 Harpoon Waypoint Envelope — RBL Mode 2-37
2.6.17 Harpoon Waypoint Envelope — BOL Mode 2-37
2.6.18 Harpoon Destruct Point Envelope 2-38
2.6.19 Harpoon Release Envelope — BOL Mode With No Waypoint Selected 2-38
2.6.20 Harpoon Release Envelope — RBL Mode with No Waypoint Selected 2-38
2.6.21 Harpoon Release Envelope — Waypoint Selected 2-38
2.6.22 Harpoon DTOT Display Symbology 2-38
2.6.23 On Top 2-38
2.6.24 Datum (Local or Remote) 2-38
2.6.25 Lost Contact 2-39
2.6.26 Downed Aircraft (Local or Remote) 2-39
2.6.27 Distressed Vessel (Local or Remote) 2-39
2.6.28 CV 2-39
2.6.29 Nonsub (Local or Remote) 2-39
2.6.30 Remote Weapon Splash Point 2-40
2.6.31 Man-In-Water (Local or Remote) or PU Emergency Bailout 2-40

Page No.

2.6.32 Return to Base (PU Emergency) 2-40
2.6.33 Basic Contact 2-40
2.6.34 ESM Bearing Sector Inhibit 2-40
2.6.35 ESM Contact 2-41
2.6.36 ESM Emitter 2-41
2.6.37 ESM/ESM Computed Intersection Fix 2-41
2.6.38 ESM Threat Contact 2-41
2.6.39 Computer Intersection — Fix Dissimilar Sources 2-41
2.6.40 Continuous Predict 2-41
2.6.41 Single Predict 2-42
2.6.42 Basic Fix 2-42
2.6.43 Aircraft Own Track History 2-42
2.6.44 Fix History 2-42
2.6.45 Sonobuoy Contact Bearing 2-42
2.6.46 Vector 2-43
2.6.47 Range Radius Circle 2-44
2.6.48 Probability Contour 2-44
2.6.49 Latitude/Longitude 2-44
2.6.50 Latitude/Longitude (Grid Coordinate Reference) 2-44
2.6.51 ASW Search Center 2-44
2.6.52 Participating Unit 2-44

2.7 TACTICAL PLOT DISPLAY 2-45
2.7.1 Pilot Display 2-45
2.7.2 COTAC MPD 2-45
2.7.3 TACCO/SENSO MPD 2-45

2.8 INTEGRATED CONTROL SYSTEM 2-45
2.8.1 Introduction 2-45
2.8.2 Built-In Test Equipment 2-45
2.8.3 Trackball, Hook Verify, and Enter 2-49
2.8.4 Switch Lighting Conventions 2-49
2.8.5 INCOS Switch Actions 2-51
2.8.6 INCOS Switch Types 2-51
2.8.7 Keyset Functions 2-52
2.8.8 Display Control Functions 2-61

2.9 DATA PROCESSING OPTION SELECT FUNCTIONS 2-79
2.9.1 PRGM CONT Matrix 2-79
2.9.2 REDSPL Matrix 2-85
2.9.3 SEARCH MODE Matrix 2-89

Page No.

2.9.4 DATUM Option 2-90
2.9.5 TAC AIDS Matrix 2-93
2.9.6 SONO CONT Matrix 2-108
2.9.7 PILOT DSPL Matrix 2-108
2.9.8 PTA/CON PTA Matrix 2-110
2.9.9 REINIT Matrix 2-111

2.10 TACTICAL DIAGNOSTIC/OPERATIONAL READINESS TESTS 2-114
2.10.1 Introduction 2-114
2.10.2 Tactical Diagnostic Tests 2-114
2.10.3 Operational Readiness Tests 2-114
2.10.4 DIA/ORT MATRIX 2-114

PART II — ARMAMENT

CHAPTER 3 — ARMAMENT

3.1 ARMAMENT SYSTEM 3-1

3.2 SEARCH STORES 3-1
3.2.1 Introduction 3-1
3.2.2 Launcher Chutes 3-1

3.3 SEARCH STORES CONTROL 3-4
3.3.1 Search Power (SRCH PWR) Switch 3-4
3.3.2 Search Stores Manual Mode Operation 3-4
3.3.3 Search Stores Emergency Jettison 3-6
3.3.4 Search and Rescue Sonobuoy Release 3-8

3.4 SEARCH STORES ON-LINE CONTROL 3-8

3.5 SEARCH STORES CONTROL FUNCTIONS 3-8
3.5.1 Low Frequency Analysis and Recording (LO FAR) 3-9
3.5.2 Directional Frequency Analysis and Recording (DIFAR) 3-9
3.5.3 Directional Command Activated Sonobuoy System (DICASS) 3-9
3.5.4 SMOKE 3-9
3.5.5 Vertical Line Array DIFAR (VLAD) 3-9
3.5.6 Stores Load (STR LOAD) 3-9
3.5.7 Release (RLSE) 3-9
3.5.8 SEARCH STORES Matrix 3-9

3.6 KILL STORES 3-24
3.6.1 Introduction 3-24

Page No.

3.6.2	Bomb Bay Stations	3-25
3.6.3	Bomb Bay Doors	3-25
3.6.4	Bomb Bay Racks	3-27
3.6.5	Wing Stations	3-27
3.6.6	Wing Racks	3-27
3.6.7	Armament Control System	3-29
3.7	KILL STORES OFF-LINE CONTROL	3-29
3.7.1	MASTER ARM Switch	3-29
3.7.2	Master Arm Cue Light	3-29
3.7.3	Emergency Jettison Switch	3-29
3.7.4	STORES Switch	3-29
3.7.5	Trigger Switch	3-32
3.7.6	Bomb Bay Heat Caution Lights	3-32
3.7.7	Armament Control Panel	3-32
3.8	SELECTIVE JETTISON	3-40
3.9	EMERGENCY JETTISON	3-40
3.10	HARPOON LOS LAUNCH PROCEDURES	3-46
3.11	MISSILE SIMULATION	3-46
3.12	MAVERICK PLUS SYSTEM	3-46
3.12.1	Introduction	3-46
3.12.2	Maverick Plus System Armament and Components	3-49
3.13	KILL STORES ON-LINE CONTROL	3-66
3.13.1	Armament Control Subprogram Interface	3-68
3.14	KILL STORES CONTROL FUNCTIONS	3-91
3.14.1	TORP (Torpedo)	3-91
3.14.2	BOMB	3-91
3.14.3	MINE	3-91
3.14.4	PRACT BOMB (Practice Bomb)	3-91
3.14.5	CLSTR BOMB (Cluster Bomb)	3-91
3.14.6	HRPN MSL SIM (Harpoon Missile Simulator)	3-91
3.14.7	WPN FTP (Weapon Fly-to-Point)	3-91
3.14.8	MSL (Missile)	3-91
3.14.9	SUS (Sound Underwater Signal)	3-91
3.14.10	RLSE (Release)	3-91
3.14.11	KILL STORES Matrix	3-91

Page No.

3.15 REINITIALIZATION 3-106
3.15.1 Kill Stores 3-106
3.15.2 Search Stores 3-107

3.16 ELECTRONIC COUNTERMEASURES SYSTEM 3-107
3.16.1 System Operation 3-107
3.16.2 Control Unit 3-108
3.16.3 ECM Programmer 3-111
3.16.4 ECM Initiate Panel 3-115
3.16.5 Trigger Pulse Amplifier 3-117
3.16.6 Sequencing Switches 3-117
3.16.7 Dispenser Housings and Modules 3-117
3.16.8 Dispenser Safety Switch 3-117
3.16.9 ECM Safety Disable Toggle Switch 3-117

PART III — NAVIGATION

CHAPTER 4 — NAVIGATION

4.1 NAVIGATION 4-1
4.1.1 Introduction 4-1
4.1.2 Source Selection Criteria 4-1
4.1.3 Velocity Defects 4-2
4.1.4 DR DEF (Dead Reckoning Defect) Alert 4-2
4.1.5 Heading Selection 4-3
4.1.6 Pitch and Roll 4-3
4.1.7 Magnetic Variation 4-4
4.1.8 Groundspeed Computation 4-4
4.1.9 Vertical Velocity 4-4
4.1.10 True Track and Drift Angle 4-4
4.1.11 Windspeed and Direction 4-5
4.1.12 Altitude 4-5
4.1.13 System Drift 4-6
4.1.14 Position Keeping 4-6
4.1.15 GEO NAV Functions 4-7

4.2 TAC NAV MATRIX FUNCTIONS 4-23
4.2.1 Insert SONB (Insert Sonobuoy) 4-23
4.2.2 A/C TRK (Aircraft Track) 4-23
4.2.3 Enter FTP (Enter Fly-to-Point) 4-23
4.2.4 TAC NAV Matrix 4-23

Page No.

4.3 STEERING 4-27
4.3.1 Steering Description 4-27

PART IV — DATA LINK

CHAPTER 5 — DATA LINK SYSTEM

5.1 DATA LINK SYSTEM, MODEL IV 5-1
5.1.1 Introduction 5-1
5.1.2 System Components 5-1
5.1.3 Data Exchange 5-3
5.1.4 Control Functions 5-3

5.2 ON-LINE CONTROL FUNCTIONS 5-4
5.2.1 LINK CONT Matrix 5-4
5.2.2 LINK OPER Matrix 5-5

5.3 LINK CONT MATRIX 5-5
5.3.1 LINK PRMTR Option 5-6
5.3.2 IFF, SIF Option 5-10
5.3.3 GRID LOCK Option 5-11
5.3.4 TRACK MANAGE Option 5-12
5.3.5 ASW SUMRY Option 5-14
5.3.6 SONB STATUS (Sonobuoy Status) 5-17
5.3.7 NET ACTIVE Option 5-17

5.4 LINK OPER MATRIX 5-18
5.4.1 SHORT BC Option 5-18
5.4.2 DATA SLNCE Option 5-19
5.4.3 ACK ORDER Option 5-19
5.4.4 SPCL POINT Option 5-20
5.4.5 INHIBT REMOTE Option 5-21
5.4.6 OWN EMER Option 5-21
5.4.7 TN CALL Option 5-22
5.4.8 TN AMPLFY Option 5-23
5.4.9 ENGAGE STATUS Option 5-23
5.4.10 ASSEM REPORT Option 5-24

5.5 DATA LINK SYSTEM CONFIGURATION 5-25
5.5.1 Link Setup Procedure 5-25
5.5.2 Own Aircraft (OAC Filter) 5-28
5.5.3 Latitude/Longitude Filter (LAT/LONG/Filter) 5-28

Page No.

PART V — NONACOUSTIC SENSORS

CHAPTER 6 — NONACOUSTIC SENSORS

6.1	FLIR SYSTEM	6-1
6.1.1	Introduction	6-1
6.1.2	System Components	6-1
6.1.3	Off-Line Controls and Indicators	6-1
6.1.4	Display	6-3
6.1.5	On-Line Control Functions	6-5
6.1.6	FLIR Matrix	6-5
6.1.7	FLIR Reinitialization	6-17
6.1.8	AN/USH-42 Mission Recorder/Reproducer Set	6-17
6.2	APS-137(V) RADAR SYSTEM	6-31
6.2.1	Introduction	6-31
6.2.2	Hardware Introduction	6-31
6.2.3	CV11164/APS-137 Radar Interface Unit	6-33
6.2.4	SN-546/APS-137 Synchronizer/Exciter	6-35
6.2.5	T-1203/APS-116 Transmitter	6-35
6.2.6	R-2231/APS-137 Receiver Pulse Compressor	6-35
6.2.7	AS-3637/APS-137 Antenna	6-36
6.2.8	CV-3744/APS-137 Signal Data Converter	6-37
6.2.9	PP-7813/APS-137 Programmer/Power Supply	6-38
6.2.10	C-11229/APS-137(V) Off-Line Control Unit	6-40
6.2.11	Peripheral Equipment	6-41
6.2.12	Modes of Operation	6-41
6.2.13	Radar Display Formats	6-42
6.2.14	Target Designator and Hook Symbol	6-42
6.2.15	Peripheral Readouts	6-42
6.2.16	B-Scan Autotrack Window	6-45
6.2.17	Single Target Automatic Tracking	6-45
6.2.18	Test Pattern Displays	6-47
6.2.19	Radar Operation	6-47
6.2.20	RDR A Matrix	6-51
6.2.21	RDR B Matrix	6-65
6.3	INTERROGATOR SET	6-73
6.3.1	Interrogator Equipment	6-73
6.3.2	IFF Controls and Indicators	6-75
6.3.3	Interrogator Displays	6-75
6.4	ELECTRONIC SUPPORT MEASURES SYSTEM	6-75
6.4.1	AN/ALR-76 ESM	6-76

Page No.

PART VI — ACOUSTIC SENSORS

CHAPTER 7 — ACOUSTIC DATA PROCESSING SYSTEM (ADPS)

7.1 ACOUSTIC SYSTEM 7-1

7.2 SRX POWER CONTROL AND SAU TEMPERATURE INDICATOR 7-1

7.3 SONOBUOY MONITOR PANEL 7-1

7.4 SAU POWER ON/OFF SWITCH 7-2

PART VII — CUES

CHAPTER 8 — CUES

8.1 INTRODUCTION 8-1

8.2 DATA ENTRY CUES 8-1

8.3 DECISION CUES 8-1

8.4 FUNCTION ACTIVATION CUES 8-1

8.5 LOADER CUES 8-1

PART VIII — ALERTS

CHAPTER 9 — ALERTS

9.1 INTRODUCTION 9-1

9.2 EXECUTIVE ALERTS (AYK-10 ONLY) 9-1

9.3 SYSTEM ALERTS 9-1

9.4 LOADER ALERTS 9-1

9.5 ADVISORY ALERTS 9-1

9.6 KEYSET ALERTS 9-2

9.7 FUNCTION ALERTS 9-2

9.8 RECOVERY ALERTS (AYK-10 ONLY) 9-2

9.9 IN-FLIGHT TROUBLESHOOTING 9-2

Page No.

PART IX — TABLEAUS

CHAPTER 10 — TABLEAUS

10.1 INTRODUCTION 10-1

INDEX *Index-1*

LIST OF ILLUSTRATIONS

Page No.

CHAPTER 1 — DATA PROCESSING — AYK-10

Figure 1-1. Data Processing Components 1-1
Figure 1-2. S-3 System Block Diagram 1-2
Figure 1-3. GPDC Component Location 1-3
Figure 1-4. GPDC Component Interconnection 1-3
Figure 1-5. GPDC/Peripheral Equipment Interface 1-4
Figure 1-6. Digital Memory Unit 1-6
Figure 1-7. DMTU Track Layout 1-6
Figure 1-8. Digital Memory Unit Bites 1-7
Figure 1-9. Tactical Display System Components 1-8
Figure 1-10. Universal Display Generator Location in Left Internal Rack 1-9
Figure 1-11. S-3B Universal Display Generator Configuration 1-10
Figure 1-12. Tactical Display System Capabilities 1-11
Figure 1-13. Pilot Display Format 1-12
Figure 1-14. Pilot Tactical Display System Components and Interface 1-12
Figure 1-15. COTAC MPD Format 1-13
Figure 1-16. COTAC Tactical Display System Components and Interfaces 1-13
Figure 1-17. TACCO/SENSO MPD Format 1-14
Figure 1-18. TACCO Tactical Display System Components and Interfaces 1-14
Figure 1-19. SENSO Display System Components and Interfaces 1-14
Figure 1-20. Pilot Display Off-Line Controls 1-15
Figure 1-21. COTAC MPD Off-Line Controls 1-17
Figure 1-22. TACCO/SENSO MPD Off-Line Controls 1-19
Figure 1-23. UDG Test Patterns 1-21
Figure 1-24. CRT Test Patterns 1-22
Figure 1-25. CRT Acoustic Test Patterns 1-23
Figure 1-26. Power Control Panel 1-24
Figure 1-27. CMOS Memory Utilization 1-29
Figure 1-28. Program Faults and Results 1-30
Figure 1-29. Typical Display Buffer Memory Requirements 1-33
Figure 1-30. Basic Fix Symbology 1-44
Figure 1-31. Pilot Tactical Display 1-47
Figure 1-32. COTAC Tactical Display 1-49
Figure 1-33. TACCO/SENSO Tactical Plot 1-51
Figure 1-34. INCOS Components 1-52

Page No.

Figure 1-35. Clear/Destroy Display Symbols 1-57
Figure 1-36. Clear Tactical Plot Symbols 1-66
Figure 1-37. Pilot Display Control Panel 1-77

CHAPTER 2 — DATA PROCESSING — AYK-23

Figure 2-1. Data Processing Components 2-1
Figure 2-2. S-3 System Block Diagram 2-2
Figure 2-3. GPDC Component Location 2-3
Figure 2-4. AYK-23 Hardware Configuration Items 2-4
Figure 2-5. GPDC/Peripheral Equipment Interface 2-5
Figure 2-6. Digital Memory Unit 2-6
Figure 2-7. DMTU Track Layout 2-6
Figure 2-8. Digital Memory Unit Bites 2-7
Figure 2-9. Tactical Display System Components 2-9
Figure 2-10. Universal Display Generator Location in Left Internal Rack 2-10
Figure 2-11. S-3B Universal Display Generator Configuration 2-11
Figure 2-12. Tactical Display System Capabilities 2-11
Figure 2-13. Pilot Display Format 2-12
Figure 2-14. Pilot Tactical Display System Components and Interfaces 2-12
Figure 2-15. COTAC MPD Format 2-13
Figure 2-16. COTAC Tactical Display System Components and Interfaces 2-13
Figure 2-17. TACCO/SENSO MPD Format 2-14
Figure 2-18. TACCO Tactical Display System Components and Interfaces 2-14
Figure 2-19. SENSO Display System Components and Interfaces 2-14
Figure 2-20. Pilot Display Off-Line Controls 2-16
Figure 2-21. COTAC MPD Off-Line Controls 2-18
Figure 2-22. TACCO/SENSO MPD Off-Line Controls 2-20
Figure 2-23. UDG Test Patterns 2-23
Figure 2-24. CRT Test Patterns 2-24
Figure 2-25. CRT Acoustic Test Patterns 2-25
Figure 2-26. AN/AYK-23(V) Maintenance Panel 2-25
Figure 2-27. Power Control Panel 2-27
Figure 2-28. Typical Display Buffer Memory Requirements 2-31
Figure 2-29. Basic Fix Symbology 2-43
Figure 2-30. Pilot Tactical Display 2-46
Figure 2-31. COTAC Tactical Display 2-48
Figure 2-32. TACCO/SENSO Tactical Plot 2-50
Figure 2-33. INCOS Components 2-51
Figure 2-34. Clear/Destroy Display Symbols 2-55
Figure 2-35. Clear Tactical Plot Symbols 2-64
Figure 2-36. Pilot Display Control Panel 2-75

Page No.

CHAPTER 3 — ARMAMENT

Figure 3-1. Chute Alphanumerics and Buoy Jettison Sequence 3-2
Figure 3-2. Maximum Sonobuoy Launch Envelopes 3-3
Figure 3-3. Manual Search Stores Control Panel 3-5
Figure 3-4. Sonobuoy Safety Switch 3-5
Figure 3-5. Search Stores Control Components 3-6
Figure 3-6. Manual Search Stores Control Panel Control Functions 3-6
Figure 3-7. Procedure for Release of Search Stores (Manual Off-Line Mode) 3-7
Figure 3-8. Bomb Bay Designation and Release Sequence 3-25
Figure 3-9. Bomb Bay Doors Ground Control Panel 3-26
Figure 3-10. Bomb Bay Stations Controls and Indicators 3-28
Figure 3-11. Wing Station Pylon Controls and Indicators 3-30
Figure 3-12. Armament Control System Components 3-31
Figure 3-13. Armament Control Panel 3-33
Figure 3-14. Selection and Simulated Release of Weapons for TACTS NDWS 3-39
Figure 3-15. Initialization of Armament Control System (Manual Mode) 3-40
Figure 3-16. Selection and Release of Bombs from Bomb Bay (Manual Mode) 3-41
Figure 3-17. Selection and Release of Bombs, Practice Bombs, and Missiles from Wing Stations (Manual Mode) 3-43
Figure 3-18. Selection and Release of Bombs, Practice Bombs, and Missiles from TERs (Manual Mode) 3-45
Figure 3-19. Selection and Release of Torpedoes (Manual Mode) 3-47
Figure 3-20. MPS System Diagram 3-50
Figure 3-21. Missile Controller Functional Missile Assignments 3-54
Figure 3-22. Armament CDNU Location on Pilot Center Console 3-55
Figure 3-23. ACDNU Function Key Allocation 3-56
Figure 3-24. ACDNU Stores Inventory Page 3-57
Figure 3-25. ACDNU IR Maverick Page 3-59
Figure 3-26. ACDNU Laser Maverick Page 3-61
Figure 3-27. Pre-Launch Pod Page 3-63
Figure 3-28. Post-Launch Pod Page 3-65
Figure 3-29. ACDNU SLMR Page 3-67
Figure 3-30. Target Parameters Page 3-69
Figure 3-31. Launch Parameters Page 3-74
Figure 3-32. System Status Page 3-76
Figure 3-33. ACDNU/DDS Status Page 3-77
Figure 3-34. SLMR/AMIB/DL-13 Status Page 3-78
Figure 3-35. System Test Page 3-79
Figure 3-36. ACDNU/DDS Test Page 3-80

Page No.

Figure 3-37. SLMR/AMIB/DL-13 Test Page 3-81
Figure 3-38. Missile Controller Test Page 3-82
Figure 3-39. Index Page 3-83
Figure 3-40. DDS Page 3-83
Figure 3-41. Pod Mission Assign Page 3-84
Figure 3-42. SLAM-ER Display 3-85
Figure 3-43. Laser Maverick Display 3-86
Figure 3-44. Infrared Maverick Display 3-87
Figure 3-45. ACDNU Global Alerts 3-88
Figure 3-46. Armament Control Subprogram Interface 3-89
Figure 3-47. ECM System Components 3-108
Figure 3-48. ECM Block Diagram 3-109
Figure 3-49. ECM System Components 3-110
Figure 3-50. ECM Control Unit 3-111
Figure 3-51. ECM Control Unit Off-Line Controls 3-112
Figure 3-52. ECM Programmer 3-113
Figure 3-53. ECM Programmer Controls 3-114
Figure 3-54. ECM Initiate Panel 3-116
Figure 3-55. ECM Initiate Panel Controls and Indicators 3-116
Figure 3-56. Dispenser Module Partitioning 3-118
Figure 3-57. Typical Expendable 3-118

CHAPTER 4 — NAVIGATION

Figure 4-1. Navigation Subsystem Block Diagram 4-2
Figure 4-2. Aircraft Carrier PIM Journey 4-9
Figure 4-3. TACAN Capabilities 4-19
Figure 4-4. FTP Characteristics 4-28
Figure 4-5. FTP Usage 4-28
Figure 4-6. FTP Capture 4-29
Figure 4-7. FTP Capture Characteristics 4-30
Figure 4-8. Designated FTP Capture 4-30
Figure 4-9. Weapon FTP Track Designations 4-31
Figure 4-10. Automatic Guidance Block Diagram 4-33

CHAPTER 5 — DATA LINK SYSTEM

Figure 5-1. Link 11 System Components 5-2
Figure 5-2. Data Link System Interface 5-3
Figure 5-3. KGX-40/TSEC Remote Control Panel 5-25
Figure 5-4. Latitude/Longitude Filter 5-28
Figure 5-5. OAC Filter 5-28

Page No.

CHAPTER 6 — NONACOUSTIC SENSORS

Figure 6-1. FLIR System Block Diagram 6-2
Figure 6-2. OR-89C/AA FLIR System Components 6-3
Figure 6-3. Turret/Sensor Stow Positions and Travel Limits 6-3
Figure 6-4. FLIR Display 6-4
Figure 6-5. FLIR Bombing 6-13
Figure 6-6. AN/USH-42 Mission Recorder/Reproducer Set 6-18
Figure 6-7. AN/USH-42 Remote Control and Advisory Panel 6-19
Figure 6-8. AN/USH-42 Recorder/Reproducer Electronics Unit 6-22
Figure 6-9. AN/USH-42 Recorder/Reproducer Electronics Unit 6-27
Figure 6-10. Radar System Parameters 6-31
Figure 6-11. Radar Interface Block Diagram 6-32
Figure 6-12. Radar System Components 6-32
Figure 6-13. RIU Functional Diagram 6-34
Figure 6-14. Antenna Radiation Area 6-34
Figure 6-15. Antenna Stabilization 6-36
Figure 6-16. Antenna Tilt 6-37
Figure 6-17. PPI Format with Patch 6-38
Figure 6-18. PPI Format with Range/Heading Marks 6-39
Figure 6-19. Programmer/Power Supply BITE Circuitry 6-39
Figure 6-20. C11229/APS-137 Off-Line Control Unit 6-40
Figure 6-21. ACLS Radar Test Switch Location 6-41
Figure 6-22. Wave Guide Pressurization System 6-42
Figure 6-23. PPI Format 6-43
Figure 6-24. PPI/Image Peripheral Readouts 6-43
Figure 6-25. PPI/B-Scan Format 6-44
Figure 6-26. Four Image Display 6-45
Figure 6-27. Four Image/A-Scan Display 6-46
Figure 6-28. Single Image Display 6-46
Figure 6-29. Single Image/A-Scan Display 6-47
Figure 6-30. Periscope Mode Threshold Processing Test Pattern 6-48
Figure 6-31. Periscope Mode Amplitude Processing with B-Scan Test Pattern 6-48
Figure 6-32. Navigation/Weather Mode with B-Scan Test Pattern 6-49
Figure 6-33. Surface Search Mode Amplitude Processing Test Pattern 6-49
Figure 6-34. Surface Search Mode Threshold Processing with B-Scan Test Pattern 6-50
Figure 6-35. Image Mode A-Scan Test Pattern 6-50
Figure 6-36. APS-137 Radar Parameters 6-57
Figure 6-37. Air-to-Air Interrogator Control Panel and Indicators 6-73
Figure 6-38. Interrogator Components 6-74
Figure 6-39. Interrogator Interfaces 6-74

Page No.

Figure 6-40. IFF/SIF Procedure and Display 6-75
Figure 6-41. IFF Mode 1 Display 6-76
Figure 6-42. IFF Mode Code Displays for Challenge CC 6-76
Figure 6-43. ESM System Block Diagram 6-77

CHAPTER 7 — ACOUSTIC DATA PROCESSING SYSTEM (ADPS)

Figure 7-1. SRX Power ON/OFF Switch and Location 7-1
Figure 7-2. Sonobuoy Monitor Panel and Location 7-2
Figure 7-3. Sonobuoy Monitor Panel Controls and Functions 7-2
Figure 7-4. SAU Power ON/OFF Switch Location 7-3

CHAPTER 8 — CUES

Figure 8-1. Data Entry Cues and Purposes 8-2
Figure 8-2. Decision Cues and Purposes 8-8
Figure 8-3. Function Activation Cues and Purposes 8-34
Figure 8-4. Loader Cues and Purposes 8-36

CHAPTER 9 — ALERTS

Figure 9-1. Description of Alerts 9-3
Figure 9-2. Pilot Station System Alerts 9-28

CHAPTER 10 — TABLEAUS

Figure 10-1. Tableau List 10-1
Figure 10-2. Antenna Parameters 10-3
Figure 10-3. Classification Aids 10-4
Figure 10-4. Comm Configuration (COMM-CONFIG) 10-6
Figure 10-5. Contact Amplify 10-8
Figure 10-6. DMU Expanded Subsystem Status 10-11
Figure 10-7. ESM Expanded Subsystem Status 10-12
Figure 10-8. Fix Amplify 10-14
Figure 10-9. Flight Summary (ALPHA-FLT SUM) 10-18
Figure 10-10. Harpoon Expanded Subsystem Status 10-26
Figure 10-11. Harpoon Missile Expanded System Status 10-28
Figure 10-12. Harpoon Tableau 10-30
Figure 10-13. Index 10-33
Figure 10-14. Kill Stores (STRS-KILL) 10-35
Figure 10-15. Link 11 Order (LINK-ORDER) 10-37
Figure 10-16. Link 11 Parameters 10-38
Figure 10-17. Link 11 PU List (PU) 10-44
Figure 10-18. Configuration NAV Parameters (PRMTRS) 10-47
Figure 10-19. Configuration NAV STATUS Tableau 10-50

Page No.

Figure 10-20. NIU 1 Expanded Subsystem Status 10-52
Figure 10-21. NIU 2 Expanded Subsystem Status 10-54
Figure 10-22. Note Pad 10-56
Figure 10-23. Operator Library 10-57
Figure 10-24. Program Status (STAT PRGM) (AYK-10 only) 10-58
Figure 10-25. Radar Expanded Subsystem Status 10-60
Figure 10-26. Radar Parameters (RADAR PRMTRS) 10-63
Figure 10-27. Rig 10-64
Figure 10-28. SRCH STRS Load (SRCH) 10-66
Figure 10-29. CC Expanded Subsystem Status 10-68
Figure 10-30. Sonobuoy Amplify 10-70
Figure 10-31. System Status (AYK-10) 10-72
Figure 10-32. Track Amplify 10-78
Figure 10-33. Track Management 10-82
Figure 10-34. UHF CH-F Assignment (UHF CH-F) 10-83

FOLDOUTS

Pilot Station Weapon System Displays and Controls FO-1
Copilot/COTAC Station Weapon System Displays and Controls FO-2
TACCO Station Weapon System Displays and Controls FO-3
SENSO Station Weapon System Displays and Controls FO-4
COTAC Matrix A Option Select Legends FO-5
COTAC Matrix B Option Select Legends FO-6
COTAC Matrix B Option Select Legends (Aircraft Incorporating AFC-287) FO-7
TACCO Matrix A Option Select Legends FO-8
TACCO Matrix B Option Select Legends FO-9
TACCO Matrix B Option Select Legends (Aircraft Incorporating AFC-287) FO-10
Avionics Equipment Location (Left) FO-11
Avionics Equipment Location (Left) (Aircraft Incorporating AFC-287) FO-12
Avionics Equipment Location (Right) FO-13
Avionics Equipment Location (Right) (Aircraft Incorporating AFC-281) FO-14
CAINS II Interface Diagram FO-15
INCOS Tray Switch Designations FO-16

LIST OF ABBREVIATIONS AND ACRONYMS

A

A/C. Aircraft.

A/D. Analog to digital.

ac. Alternating current.

ACDNU. Armament CDNU.

ACK. Acknowledge.

ACP. Armament control panel.

ACTVT. Activate.

ADF. Automatic direction finding.

ADPS. Acoustic data processing system.

ADV. Advance.

AE. Arithmetic element; altitude error.

AEC. Arithmetic element controller.

AF. Audio frequency.

AFCS. Automatic flight control system.

AID NAV. Aided navigation.

AIL. Active interest list.

ALN. Align.

ALNQ. Alignment quality

ALM. Almanac.

ALT. Altitude.

AMAC. Armament monitor and control panel.

AMBIG. Ambiguous.

AMIB. Advanced Maverick interface box.

AME. Angle measuring equipment.

AMP or AMPTD. Amplitude.

ANEW. Army navy electronic warfare.

ANLG. Analog.

ANT. Antenna.

AOA. Angle of attack.

AOP. Area of probability.

AP. Arithmetic processor.

APS. Automatic pilot system.

APU. Auxiliary power unit.

ARA. Attitude reference assembly.

ARM. Armament.

ARMCON. Armament processing and control.

ARMCOS. Armament control system.

AS. Anti-spoofing.

ASMD. Antiship missile defense.

ASSEM. Assemble.

ASUW. Antisurface warfare.

ASW. Antisubmarine warfare.

ASWOC. Antisubmarine warfare operations center.

ATA. Automatic target acquisition.

AUTO. Automatic.

AUX. Auxiliary.

AVAIL. Available.

B

B-SCAN. Azimuth versus range (radar).

BALLS. Ballistics control.

BB. Bomb bay.

BC. Broadcast; bus controller.

BCN. Beacon.

BGBIT. Background built-in test.

BINGO. Alternate landing field.

BIT. Built-in test.

BITE. Built-in test equipment.

BIU. Bus interface unit.

BLNK. Blank.

BLP. Bearing to launch point.

BOL. Bearing only launch.

BOT. Beginning of track.

BRG. Bearing.

BRT. Brightness.

BS. Bulk store.

BSM. Basic storage module.

BW. Band width or beam width.

C

CAD. Cartridge activated device.

CAINS. Carrier aircraft inertial navigation system.

CANTCO. Cannot comply.

CB. Circuit breaker.

CBIT. Continuous built-in test.

CC. Communications controller.

CCA. Circuit card assembly.

CCC. Channel control command.

CCG. Communications control group.

CCP. Control and correlation processor.

CCPSST. CCP scan sequence table.

CDB. Control distribution box.

CDNU. Control display navigation unit.

CGA. Compensator group adapter; control gain amplifier.

CHAR. Character; characteristics.

CI. Control indicator.

CILS. Carrier instrument landing system.

CIR. Circle.

CIW. Control interrupt word.

CLA. Control logic assembly.

CLASS. Classification.

CLG. Ceiling.

CLSFY. Classify.

CMD. Command.

CMOS. Complimentary metal oxide semiconductor.

CMPTR. Computer.

CNCT or CNTCT. Contact.

CNTRST. Contrast.

COD. Carrier onboard delivery.

COMM. Communication.

COMM CTRLR. Communication controller.

COMPAC. Communications processing and control.

CON/PTA. Conics/passive tracking algorithm.

CONT. Continued or control.

COORD. Coordinate.

CORLOAD. Core resident load.

CORR. Correct.

COSRO. Conical scan on receive-only.

COTAC. Copilot tactical coordinator.

CP. Central processor.

CPP. Continuous predict position.

CPS. Control processor storage.

CPU. Central processor unit.

CROS. Common real-time operating system.

CRT. Cathode ray tube.

CSB. Channel select bus.

CSP. Contact sensitivity product.

CV. Aircraft carrier.

CVALN. Carrier alignment.

CVASWM. Carrier ASW module.

CVHDG. Carrier heading.

CVMAN. Carrier manual alignment.

CVSPD. Carrier speed.

CW. Continuous wave.

D

D/A. Digital to analog.

DAC. Digital to analog converter.

DATUM. Known or estimated position of submarine.

dB. Decibel.

dc. Direct current.

DCA. Digital computer autopilot.

DCAT. Display category.

DDS. Digital data set.

DECR. Decrease.

DEF. Defect.

DEG. Degrees.

DEM. Disk electronics module.

DEP. Data extraction program.

DESIG. Designate.

DESTEX. Desensitized tritonal.

DET. Detect.

DF. Direction finder; display function.

DGG . Display generator group.

DIA/ORT. Diagnostics/operational readiness test.

DIAG. Diagnostics.

DISPAC. Display processing and control.

DLC. Direct lift control.

DLP. Distance to launch point.

DLRP. Data link reference point.

DMA. Direct memory access.

DME. Distance measuring equipment.

DMTU. Digital magnetic tape unit.

DMU. Digital memory unit.

DOA. Direction of arrival.

DPOSIT. Deposit.

DPS. Data processing system.

DR. Dead reckoning.

DSME. Doppler sea motion error.

DSPL. Display.

DSTRY. Destroy.

DTG. Date time group, distance to go.

DTOT. Designated time on target.

DTS. Data terminal set.

DVB. Data validity bits.

DW. Data word.

E

E/CCM. ECM and/or ECCM.

E/W. East/West.

EAB. External address bus.

EAR. Error analysis routine.

EB. External bus.

EBIT. External built-in test.

ECCM. Electronic counter-countermeasure(s).

ECM. Electronic countermeasure(s).

ECP. Engineering change proposal.

ECS. Environmental control system.

EDB. External data bus.

EDT. Extended dwell time.

EFCS. Emergency flight control system.

EFI. Electronic flight instrument.

EFIS. Electronic flight instrument system.

EGI. Embedded GPS/INS.

EGPS. Embedded GPS.

EHP. Emergency hydraulic pump.

EINS. Embedded INS.

EMC. Electromagnetic compatibility.

EMCON. Emissions control.

EMER. Emergency.

EMI. Electromagnetic interference.

ENT. Enter.

EOT. End of track.

ESM. Electronic support measures.

ESMTD. ESM TMP diagnostic program.

ESR. Executive service request.

ESST. Expanded subsystem status tableau.

EST. ESM self-test.

ETA. Estimated time of arrival.

ETI. Elapsed time indicator.

ETLP. Estimated time to the launch point.

ETOT. Estimated time on target.

EW. Electronic warfare.

EXEC. Executive initialization and recovery.

EXT. External.

F

F. Friendly; time of frozen image display.

FAR. False alarm rate.

FC. Frequency converter.

FCLP. Field carrier landing practice.

FC/NBR. Frequency converter/narrow band receiver.

FDCU. Fire detection control unit.

FEC. Far edge control.

FIFO. First in first out.

FLDT. Floodlight.

FLIR. Forward-looking infrared.

FLR. Failure.

FM. Frequency modulation.

FMS. Flight mode selector.

FOD. Foreign object damage.

FOM. Figure of merit.

FOV. Field of view.

fps. Feet (or foot, or frames) per second.

FREQ. Frequency.

FRESCAN. Frequency scanning.

FRP. Feature recognition program.

FSK. Frequency shift keying.

FSW. Fault status word.

FTP. Fly-to-point.

G

GHz. Gigahertz.

GEN. Generator.

GENTRK. Generated track.

GEO. Geographic.

GEO NAV or GEONAV. Geographic navigation.

GMT. Greenwich mean time or Zulu time (Z).

GND ALN. Ground alignment.

GPDC. General-purpose digital computer.

GPS. Global positioning system.

GRU. Gridlock reference unit.

GS. Groundspeed.

H

H. Hostile.

HACLC Panel. Harpoon aircraft command and launch control panel.

HACLCS. Harpoon aircraft command and launch control system.

HATS. Hybrid avionics test set.

HCV. Harpoon configuration value.

HDG. Heading.

HF. High frequency.

HOD. Home-on decoy.

HOJ. Home-on jammer.

HOR. Horizontal.

HOT. Home-on target.

HRPN MSL. Harpoon missile.

HSI. Horizontal situation indicator.

HYFIX. Hyperbolic fix.

Hz. Hertz.

I

I/F. Interface.

I/O. Input/output.

IAS. Indicated airspeed.

IBIT. Initiated built-in test.

ICAO. International Civil Aviation Organization.

ICLS. Instrument carrier landing system.

ICS. Intercommunication system.

ID or IDENT. Identification.

IF. Instantaneous frequency intermediate frequency.

IFA. In-flight alignment.

IFF. Identification friend or foe.

IFPM. In-flight performance monitoring.

IFU. Interface unit.

ILS. Instrument landing system.

IMPL. Initial microprogram load.

INACT. Inactive.

INAV. Integrated navigation.

INCM. Incomplete.

INCOS. Integrated control system.

INCR. Increase.

IND. Indicator.

INHIBT. Inhibit.

INIT. Initiate; initialize.

INTCPT. Intercept.

INTEN. Intensity.

INTSCTN. Intersection.

INTVL. Interval.

INU. Inertial navigation unit.

IOC. Input/output controller.

IOI. Input/output interface.

IP. Initial position.

IPL. Initial program load.

ips. Inches per second.

IRC. Integrated radio control.

IRG. Interrecord gap.

IRMAV. Infrared Maverick missile.

IRU. Interface receptacle unit.

IS. Initial search.

ISA. Inertial sensor assembly.

ISAR. Inverse synthetic aperture radar.

ISD. Input search depth.

ITL. Intent to launch.

ITT. Interturbine temperature.

J

JETT or JTSN. Jettison.

K

K. Kilo; kilobyte.

KEYPAC. Keyset processing and control.

KIAS. Knots indicated airspeed.

KTS. Knots.

L

L/L. Latitude/longitude.

LAH. Low-altitude hold.

LAT. Latitude.

LAU. Launcher.

LCP. Local control panel.

LE. Leading edge.

LED. Light emitting diode.

LFK. Line function key.

LFM. Linear frequency modulation.

LIN. Line.

LINK. Link 11.

LMAV. Laser Maverick missile.

LON or LONG. Longitude.

LOP. Line of position.

LORAN. Long-range navigation.

LORO. Lobe on receive-only.

LOS. Line of sight.

LOX. Liquid oxygen.

LSB. Lower sideband.

LSK. Line select key (CDNU).

LTI. Long-term integration.

LTI/STI. Long-term/short-term integration.

LWR. Lower.

M

MAN. Manual.

MCU. Mid-course update.

MDS. Minimum discernable signal.

MDT. Minimum dwell time.

MEM. Memory.

MGU. Midcourse guidance unit.

MHz. Megahertz.

MIC. Microphone.

MLG. Main landing gear.

MN. Maintenance microprocessor.

MON. Monitor.

MOT. Mark on top.

MPD. Multipurpose display.

MPIO. Microprocessor input/output.

MPS. Maverick Plus System.

MR/RS. Mission recorder/reproducer set.

MRS. Maximum range search.

msec. Millisecond.

MSL. Missile; mean sea level.

MSN. Mission.

MVAR. Magnetic variation.

MWOD. Multiple word of the day.

N

N/S. North/South.

N/T. Nose and tail.

NASO. Nonacoustic sensor operator.

NATOPS. Naval aviation training and operating procedures standardization.

NAV. Navigation.

NAVAIRSYSCOM. Naval Air Systems Command.

NBR. Narrow band receiver.

NCS. Net control station.

NDCR. Navigation data converter repeater.

NDRO. Nondestructive readout.

NDS. Navigation display selector.

NEG. Negative.

NFOV. Narrow field of view.

NIR. Noise interference rejection.

NIU. Navigation interface unit.

NIWA. Navigation interface wired assembly.

nm. Nautical mile.

NPRI. Normal pulse repetition interval.

nsec. Nanosecond.

NTDS. Navy tactical data system.

NUM. Number.

NWDS. No drop weapon scoring.

NWS. Nosewheel steering.

O

OAC. Own aircraft.

OFP. Operational flight program.

OLCU. Off-line control unit.

OMNI. Omnidirectional.

OMP. Operational mission program.

OPER. Operator.

OPTNL. Optional.

OPIO. Other processor input/output.

OPLOAD. Operational load.

ORB. Orbit.

ORD. Ordnance.

ORT. Operational readiness test.

OT. On top.

OTH. Over the horizon.

OTPI. On top position indicator.

OVRLD. Overload.

P

PBR. Practice bomb rack.

PCT. Pulse characterization table.

PDC. Practice depth charge.

PDIP. Preflight data insertion program.

PDM. Pulse distribution module.

PDRS. Postflight data reduction software.

PGD. Pulse group duration.

PGRI. Pulse group repetition interval.

PHSRU. Parachute harness sensing release unit.

PID. Preflight inserted data.

PIM. Position of intended movement.

PLT. Pilot.

PMU. Parameter measurement unit.

POP. Pulse on pulse.

POS. Position.

PP. Postpressor; pulse processor

PPI. Plan position indicator.

PPNT. PP navigation table.

PPRI. Precision pulse repetition interval.

PPSST. PP scan sequence table.

PRCS. Process.

PRED. Predict.

PRF. Pulse repetition frequency.

PRGM. Program.

PRI. Pulse repetition interval.

PRMTRS. Parameters.

PROM. Programmable read-only memory.

PROX. Proximity.

PS. Program store.

PTT. Push to talk.

PU. Participating unit.

PW. Pulse width.

PWR. Power.

Q

QTY. Quantity.

QUAL. Qualification.

R

R/O. Range only.

RAAWS. Radar altimeter and altitude warning system.

RAD. Radius; radiate.

RAD ALT. Radar altimeter.

RBL. Range and bearing launch.

RCAP. Remote control and advisory panel.

RCDR. Recorder.

RCF. Receiver calibration factor.

RCNTR. Recenter.

RCT. Remote compass transmitter.

RCVR. Receiver.

RDR. Radar.

REACQ. Reacquisition.

RF. Radio frequency.

RIU. Radar interface unit.

RLG. Ring laser gyro.

RLOAD. Reload.

RLSE. Release.

RLY. Relay.

RNAV. Area navigation.

RNG. Range.

RNZ. Reinitialization.

RQ. Reception quality.

R/REU. Recorder/reproducer electronics unit.

RS. Reserved store.

RSCI. Radio set control indicator.

RST. Reset.

RTC. Real-time clock.

RX. Receiver.

S

SA/AS. Selective availability/anti-spoofing.

S-A/CF. Safe-arm/contact fuze.

SANAV. Stand alone navigation.

SAR. Search and rescue.

SC. Signal comparator; storage controller.

SCADC. Standard central air data computer.

SCH. Search.

SCM. Semiconductor memory.

SDC. Signal data converter.

SDTP. Subsystem diagnostic test program.

SEL. Select.

SENSO. Sensor operator.

SEQ. Sequence.

SESCOS. Search stores control system.

SHAL. Shallow.

SIB. Standard interface bus.

SIG. Signal.

SIM. Simulation; simulator.

SIP. Signal integration processor.

SL. Selection loader.

SLAM-ER. Standoff land attack missile — expanded response.

SLC. Sonobuoy launch container; sonobuoy launch chute.

SLN. Straight and level noise.

SLNCE. Silence.

SLTA. Search, localization, track, and attack.

SLU. Switching logic unit.

SMP. Sonobuoy monitor panel.

SNR. Signal-to-noise ratio.

SOI. Signals of interest.

SONB. Sonobuoy.

SONO. Sonobuoy.

SP. Self-protection.

SPCL. Special.

SPD. Speed.

spr. Seconds per rotation.

sps. Seconds per scan.

SRA. Shop replaceable assembly.

SRCE. Source.

SRCH. Search.

SSSC. Surface surveillance and sea control.

SST. Scan sequence table.

STA. Station.

STAE. Second time around echo.

STAT. Status.

STBY. Standby.

STC. Storage transfer controller.

STEER. Steering subprogram.

STHDG. Stored heading.

STI. Short-term integration.

STP. System test program.

STR. Store.

SUB. Submarine.

SUMRY. Summary.

SURF. Surface.

SUS. Sound underwater signal.

T

T. Threat.

TA. Threat avoidance.

TAB. Tableau.

TAC. Tactical.

TAC PLOT. Tactical plot.

TACAN. Tactical air navigation.

TACCO. Tactical coordinator.

TACNAV. Tactical navigation.

TACSATCOM. Tactical satellite communications.

TAS. True airspeed.

TC. Transportable cartridge.

TCN. Tacan.

TD. Tactical diagnostics.

TDS. Tactical display symbol; target designator symbol; tactical display system.

TE. Trailing edge.

TEMP. Temperature.

TER. Triple ejector rack.

TERM. Terminate; terminal.

TET. Tentative emitter track.

TFWS. Task force warning and support.

TGT. Target.

THRESH. Threshold.

THUM. Tactical Harpoon users manual.

TIMB. Time in main beam.

TLP. Time to launch point.

TMP. Tactical mission program.

TN. Track number.

TOA. Time of arrival.

TORP. Torpedo.

TPA. Trigger pulse amplifier.

TR. Transformer rectifier.

TRANS. Transmit.

TRK. Track.

TRKR. Tracker.

TSC. Tactical support center.

TSG. Test signal generator.

TTG. Time to go.

TTGT. Time to target.

TWS. Track while scan.

TWSRO. TWS receive-only.

TWT. Traveling wave tube.

TX. Transmitter.

U

U. Unknown.

UDG. Universal display generator.

UHF. Ultrahigh frequency.

UNAVAIL. Unavailable.

UNK. Unknown.

UNLK. Unlock.

USB. Upper sideband.

V

VAST. Versatile avionics shop test.

VCO. Voltage-controlled oscillator.

VCOCT. VCO calibration table.

VDI. Vertical display indicator.

VEC. Vector.

VEL. Velocity.

VERT. Vertical.

VHF. Very high frequency.

VOR. VHF omnidirectional range.

VSA. Video switch assembly.

VSWR. Voltage standing wave ratio.

W

WFOV. Wide field of view.

WILCO. Will comply.

WOW. Weight-on-wheels.

WPN. Weapon.

WPNS. Weapons load indicators.

WRA. Weapon replaceable assembly.

WS. Working store.

WSAR. WS address register.

WST. Weapon system trainer.

X

XFER. Transfer.

XMIT. Transmit.

XMTR. Transmitter.

Y

YD or YDS. Yard or yards.

YPM. Yards per minute.

Z

Z. Zulu time or Greenwich mean time.

PREFACE

SCOPE

The NATOPS Flight Manual is issued by the authority of the Chief of Naval Operations and under the direction of Commander, Naval Air Systems Command in conjunction with the Naval Air Training and Operating Procedures Standardization (NATOPS) Program. This manual contains information on all aircraft systems, performance data, and operating procedures required for safe and effective operations. However, it is not a substitute for sound judgment. Compound emergencies, available facilities, adverse weather or terrain, or considerations affecting the lives and property of others may require modification of the procedures contained herein. Read this manual from cover to cover. It is your responsibility to have a complete knowledge of its contents.

APPLICABLE PUBLICATIONS

The following applicable publications complement this manual:

NAVAIR 01-S3AAB-1 (NATOPS Flight Manual)

NAVAIR 01-S3AAB-1A (Supplemental NATOPS Flight Manual) (Secret)

NAVAIR 01-S3AAB-1B (NATOPS Pilot Pocket Checklist)

NAVAIR 01-S3AAB-1F (NATOPS Functional Checkflight Checklist)

HOW TO GET COPIES

Note

Distribution of this manual is controlled by Commander Fleet Logistics Support Wing. All distribution requests will be reviewed by him.

Additional copies of this manual and changes thereto may be procured through the local supply system from NAVICP Philadelphia via DAAS in accordance with NAVSUP P-409 (MILSTRIP/MILSTRAP), or a requisition can be submitted to Naval Supply Systems Command via the Naval Logistics Library (NLL) website, www.nll.navsup.navy.mil. This publication is also available to view and download from the NATEC website, www.natec.navy.mil.

Automatic Distribution (with Updates)

This publication and changes to it are automatically sent to activities who are established on the Automatic Distribution Requirements List (ADRL) maintained by Naval Air Technical Data and Engineering Service Command (NATEC), San Diego, CA. If there is a continuing need for this publication, instruct appropriate Central Technical Publication Librarian (CTPL) to send a revised ADRL report as an attachment via Email to ADRL@navair.navy.mil, by WINSALTS to ADR, or send a diskette to NATEC. If your activity does not have a library, send a letter to Commanding Officer, NATEC, Attn: Code 3.3, Box 357031 Bldg. 90, San Diego, CA 92135-7031, requesting assignment of a distribution account number (if necessary) and automatic mailing of future issues of the pub(s) needed.

Note

- The ADRL report can be used only to place an activity on the mailing list for automatic distribution of future issues of pubs. It cannot be used to make one-time orders of pubs from current stock. To get pubs from stock, see ONE-TIME ORDERS above.

- During the publication update process, the Program Manager, Squadron Model Manager, and NATEC Logistics Element Manager will determine the distribution media (CD-ROM vs paper) for activities desiring future publications. Additionally, this publication is available to view or download from the NATEC web site www.natec.navy.mil.

Once established on automatic distribution by NATEC for any NAVAIR technical publication, your activity must submit an ADRL report at least once every 12 months IAW NA-00-25-100 to update or confirm automatic distribution requirements. An ADRL report

should also be submitted when there are either requirement or mailing address changes.

Note

Activities not submitting an ADRL report for more than 12 months may be dropped from distribution of all NAVAIR technical publications.

UPDATING THE MANUAL

To ensure that the manual contains the latest procedures and information, NATOPS review conferences are held in accordance with OPNAVINST 3710.7 series.

CHANGE RECOMMENDATIONS

Recommended changes to this manual or other NATOPS publications may be submitted by anyone in accordance with OPNAVINST 3710.7 series.

Routine change recommendations are submitted directly to the Model Manager on OPNAV Form 3710/6 (4-90) shown herein. The address of the Model Manager of this aircraft is:

Commanding Officer
Sea Control Squadron FOUR ONE
Naval Air Station, North Island
San Diego, California 92135
Attn: S-3B NATOPS Program Manager

Change recommendations of an URGENT nature (safety of flight, etc.), should be submitted directly to the NATOPS Advisory Group Member in the chain of command by priority message.

YOUR RESPONSIBILITY

NATOPS Flight Manuals are kept current through an active manual change program. Any corrections, additions, or constructive suggestions for improvement of its content should be submitted by routine or urgent change recommendation, as appropriate at once.

NATOPS FLIGHT MANUAL INTERIM CHANGES

Flight Manual Interim Changes are changes or corrections to the NATOPS Flight Manuals promulgated by CNO or NAVAIRSYSCOM. Interim Changes are issued either as printed pages, or as a naval message. The Interim Change Summary page is provided as a record of all interim changes. Upon receipt of a change or revision, the custodian of the manual should check the updated Interim Change Summary to ascertain that all outstanding interim changes have been either incorporated or canceled; those not incorporated shall be recorded as outstanding in the section provided.

CHANGE SYMBOLS

Revised text is indicated by a black vertical line in either margin of the page, like the one printed next to this paragraph. The change symbol shows where there has been a change. The change might be material added or information restated. A change symbol in the margin by the chapter number and title indicates a new or completely revised chapter.

WARNINGS, CAUTIONS, AND NOTES

The following definitions apply to "WARNINGs," "CAUTIONs," and "Notes" found throughout the manual.

WARNING

An operating procedure, practice, or condition, etc., that may result in injury or death, if not carefully observed or followed.

CAUTION

An operating procedure, practice, or condition, etc., that may result in damage to equipment, if not carefully observed or followed.

Note

An operating procedure, practice, or condition, etc., that is essential to emphasize.

NATOPS/TACTICAL CHANGE RECOMMENDATION
OPNAV 3710/6 (4-90) S/N 0107-LF-009-7900

DATE _____

TO BE FILLED IN BY ORIGINATOR AND FORWARDED TO MODEL MANAGER

FROM (Originator)	Unit
TO (Model Manager)	Unit

Complete Name of Manual/Checklist	Revision Date	Change Date	Section/Chapter	Page	Paragraph

Recommendation (Be specific.)

☐ CHECK IF CONTINUED ON BACK

Justification

Signature	Rank	Title

Address of Unit or Command

TO BE FILLED IN BY MODEL MANAGER *(Return to Originator)*

FROM	DATE

TO

REFERENCE

(a) Your Change Recommendation Dated _____

☐ Your change recommendation dated _____ is acknowledged. It will be held for action of the review conference planned for _____ to be held at _____

☐ Your change recommendation is reclassified URGENT and forwarded for approval to _____ by my DTG _____

/S/ _____ MODEL MANAGER	_____ AIRCRAFT

WORDING

The concept of word usage and intended meaning adhered to in preparing this Manual is as follows:

1. "Shall" has been used only when application of a procedure is mandatory.
2. "Should" has been used only when application of a procedure is recommended.
3. "May" and "need not" have been used only when application of a procedure is optional.
4. "Will" has been used only to indicate futurity, never to indicate any degree of requirement for application of a procedure.

PART I

Data Processing

Chapter 1 — Data Processing — AYK-10

Chapter 2 — Data Processing — AYK-23

CHAPTER 1

Data Processing — AYK-10

1.1 DATA PROCESSING — AYK-10

1.1.1 Introduction. The DPS receives, processes, analyzes, and correlates a large volume of data from the surface warfare (SUW) sensors and the operators, displaying the results to the operators. Thus, the DPS allows the S-3 crew to efficiently and effectively detect, classify, track, and destroy hostile targets.

The data processing hardware is listed in Figure 1-1.

Figure 1-2 shows the S-3 system block diagram.

1.1.2 General Purpose Digital Computer. The GPDC (Figure 1-3) is a general purpose, stored program computer that controls the weapons system. The GPDC receives data inputs from SUW sensors either directly or from operators through the INCOS. The GPDC processes these data to control the avionics systems and displays information to the operators through the TDS. The following components comprise the GPDC:

1. Two central processors (CP-0 and CP-1).
2. Two input/output controllers (IOC-0 and IOC-1).
3. Two input/output interfaces (IOI-0 and IOI-1).
4. Two main memory units with 131,072 (128K) addressable memory locations each. Each memory unit contains two 64K memory banks. Each bank consists of four 16K memory arrays.
5. Two CP dc to dc converters.
6. Two memory dc to dc converters.
7. Two IOI-IOC dc to dc converters.
8. Two power supplies.

The GPDC is effectively two computers in one cabinet (see Figure 1-4). Failure of one central processor, one input/output controller, or up to 10 16K memory arrays will not cause a complete loss of computer function. The failure of an IOI channel, however, disconnects the avionics subsystems connected to that channel and prevents the subsystem from being controlled by the GPDC as shown in Figure 1-5. Other subsystems connected to the operating IOI continue to operate normally.

TYPE DESIGNATOR	NOMENCLATURE	COMMON TERMINOLOGY	LOCATION
AN/AYK-10B(V)1	General Purpose Digital Computer	GPDC or Computer	Aft internal bay
RD-348A/ASH	Digital Memory Unit	DMTU	Left internal bay
AN/ASQ-147	Integrated Control System	INCOS	One at each operator station
AN/ASA-82	Tactical Display System	TDS	One at each operator station

Figure 1-1. Data Processing Components

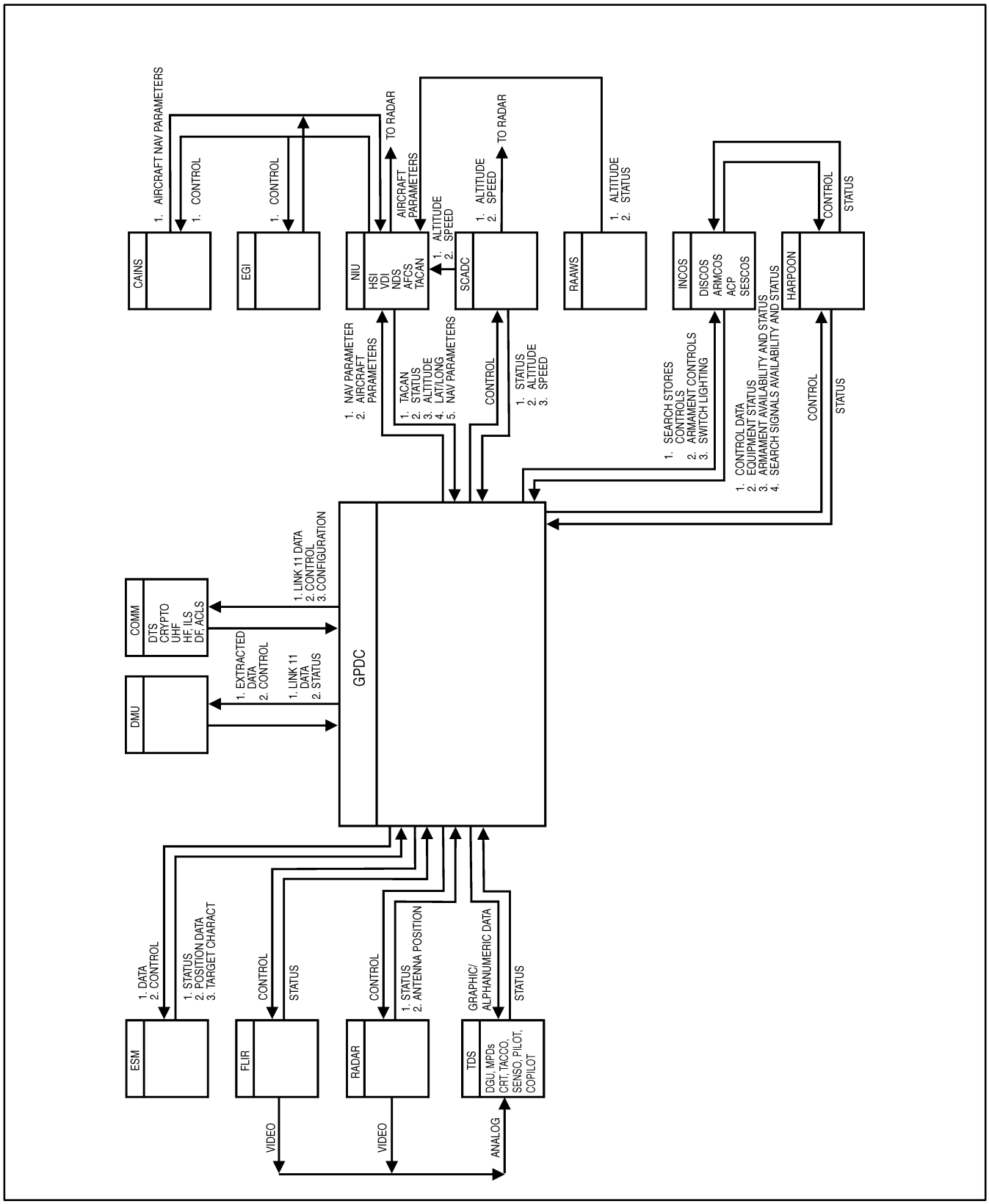

Figure 1-2. S-3 System Block Diagram

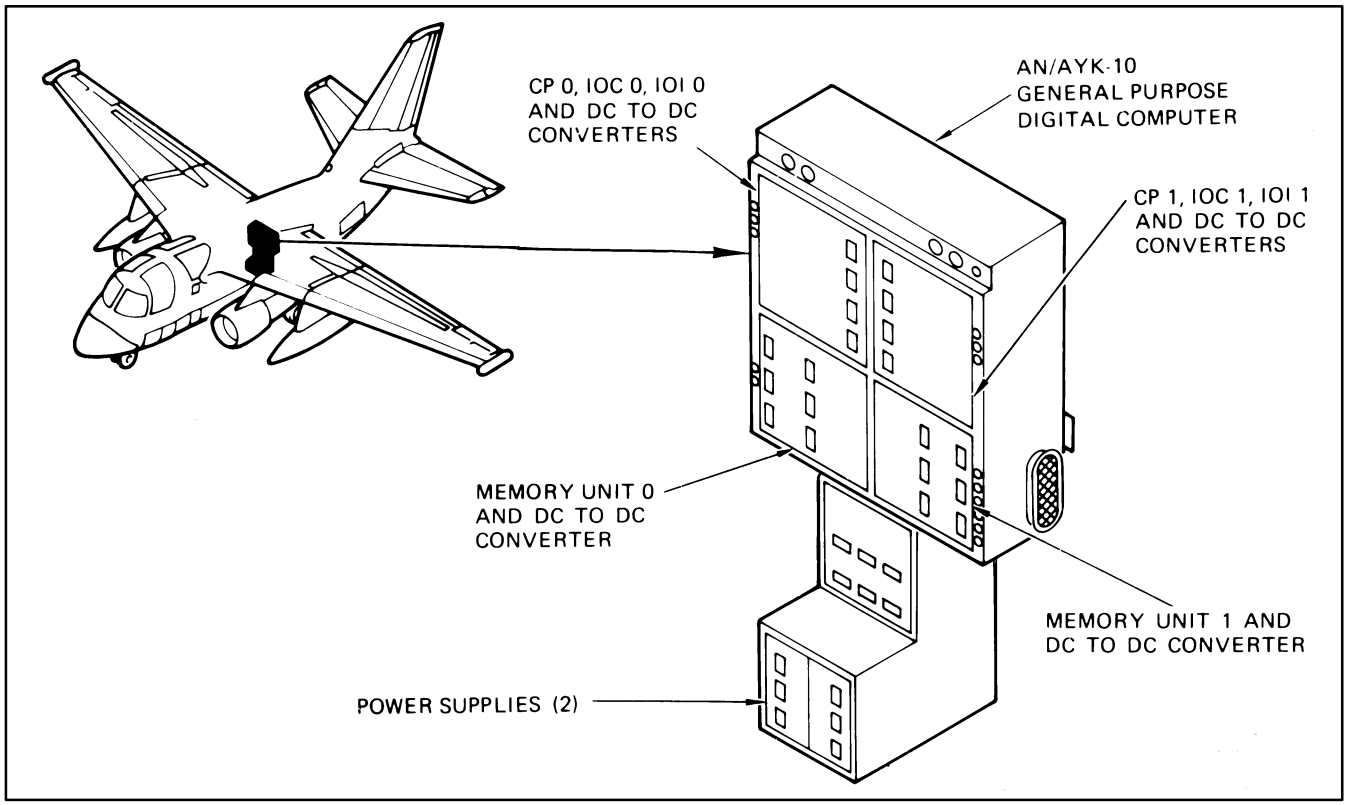

Figure 1-3. GPDC Component Location

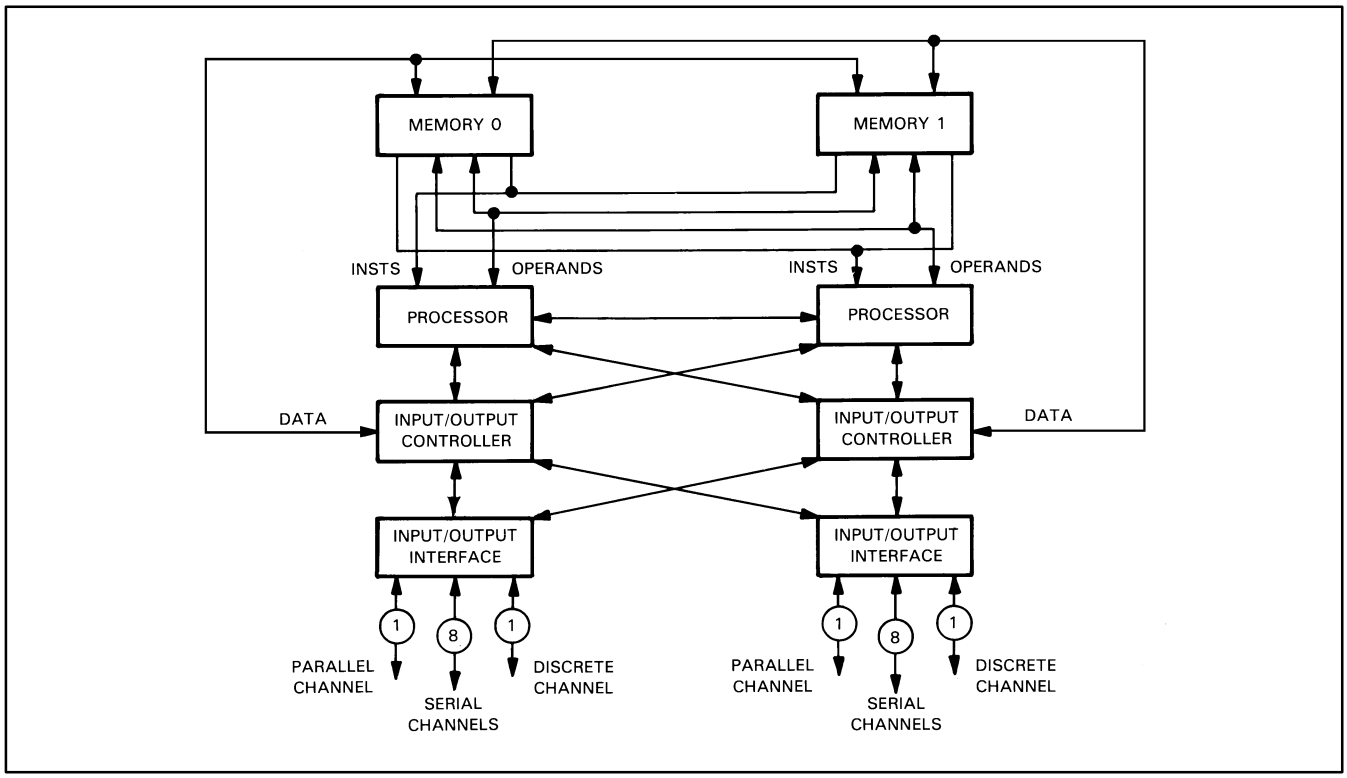

Figure 1-4. GPDC Component Interconnection

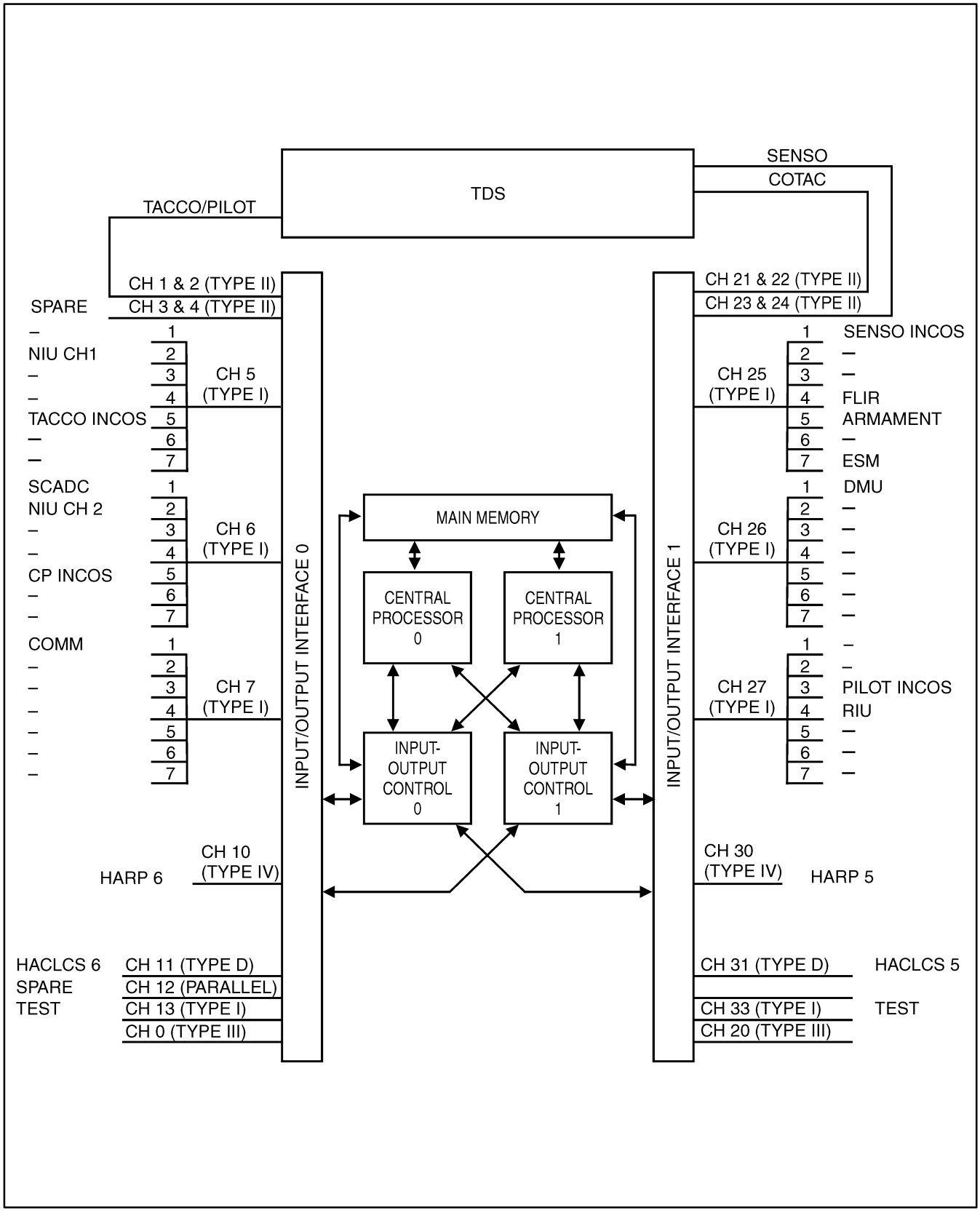

Figure 1-5. GPDC/Peripheral Equipment Interface

1.1.2.1 Central Processor. The CP is the functional heart of the GPDC. An arithmetic section is the calculating mechanism which performs arithmetic and logical decisions. The CP provides for initial startup using a hardwired program NDRO that enables the loading process.

A control section determines when instructions or numerical data are extracted and what is done with the information. Program orders are executed by decoding instructions and generating signals that command other sections.

1.1.2.2 Input/Output Controller. The IOC has access to the main memory and the CP. It transfers data to and from the peripheral equipment through the IOI. The IOC has a program of its own, which is used to perform input/output operations and make its own logic decisions, allowing the CP to process instructions not involved with input and output functions.

1.1.2.3 Input/Output Interface. The IOIs provide signal matching and parallel/serial conversion between the IOCs and peripheral equipment. Each IOI consists of eight serial channels, one parallel channel, and one discrete channel.

Serial channels are one of four types depending upon use. Type IV channels (one per IOI) provide GPDC communication with the Harpoon missile MGUs. Type III channels (one per IOI) are spare. Type II channels (two per IOI) interface with the TDS. Type I channels (four per IOI) interface all other peripheral equipment.

The parallel channels in IOI 0 and IOI 1 are spare.

Discrete channels provide GPDC communication with the HACLCS.

1.1.2.4 Main Memory. GPDC main memory is composed of two memory units. Each memory unit is composed of two 64K memory banks. The memory bank is further broken down into four 16K arrays. The memory banks use volatile CMOS RAM devices to store tactical mission program data.

Operational program load including peripheral software download is approximately 4 minutes. The selection loader reports test results to the array (16K) level. (See Figure 1-27). The operational loader uses the results from the selection loader to configure memory for the operational program. If zero arrays are reported defective, the operational loader loads an A (LOAD) using 96K of the available memory. If one or more memory arrays has failed, then the operational loader loads an F LOAD loaded using 96K of available memory. If 11 or more arrays are defective, no system is available and the "SYSTEM NOT AVAILABLE" alert is displayed. The alert "ZZZZ ARRAY DEF ZZ" indicates which array is bad.

1.1.3 Digital Memory Unit/Transportable Cartridge. The DMTU TC system utilize a 104 MB Winchester hard disk system that records and plays back data to the GPDC. The hard drive consists of four 3-1/2-inches thin film platters with a total of eight recording surfaces. The hard drive system is housed in a removable cartridge. Figure 1-6 shows the DMTU and its location in the left internal avionics rack. Figure 1-7 shows the TC program and memory storage layout.

1.1.3.1 DMTU Power-On Self-Test. When electrical power is first applied to the DMTU, a 12-second self-test is executed during which the system will be unavailable for use. Following the 12-second self-test, the front panel BITE 1, BITE 2, and PWR LEDs should all be illuminated indicating the system's readiness for on-line commands. If any LEDs are extinguished, isolate the fault according to the following (see Figure 1-8):

1. PWR LED off — Verify input power (115 VAC) is available (ETM indicating movement), then replace DMTU WRA.

2. BITE 1 LED off/BITE 2 LED on — Indicates a TC or DEM subunit failure. Replace TC first, then DMTU WRA.

3. BITE 1 LED on/BITE 2 LED off — Not a programmed self-test fault indication. Possibly defective BITE 2 LED.

4. BITE 1 LED off/BITE 2 LED off — Indicates a Type 1 adapter subunit self-test failure. TC also possibly defective. Replace TC first, followed by the DMTU WRA.

5. BITE 1 LED flashing/BITE 2 LED on — Indicates either the DMTU door is open or a TC has not been installed in the DMTU. Once the fault condition is remedied, it may be necessary to cycle DMTU power to reinitialize the power-on self-test.

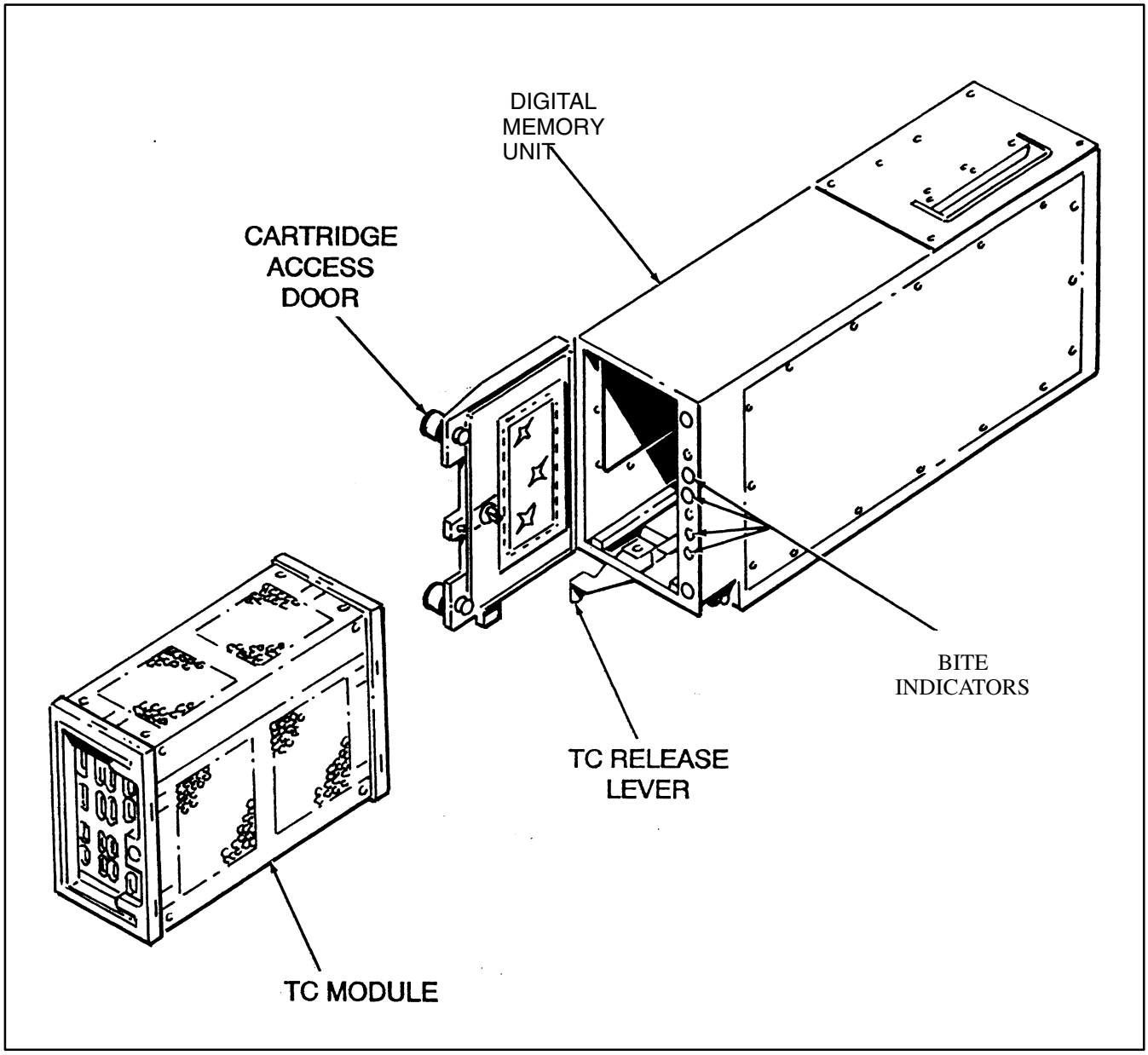

Figure 1-6. Digital Memory Unit

TRACK	
1	DMTU DIRECTORY/MEMORY MAP
2	DATA EXTRACT MISSION EVENTS
3	SL ROUTINE, TACTICAL MISSION PROGRAM, ESM LIBRARY, PDIP DATA, MEMORY MAP
4	DATA EXTRACT OVERFLOW FROM TRACK 2
5	SL ROUTINE, SYSTEM TEST PROGRAM, ESM DT, AND MEMORY MAP
6	SAFE DATA STORAGE
7	ESM PROGRAM, DMTU DIRECTORY, MEMORY MAP

Figure 1-7. DMTU Track Layout

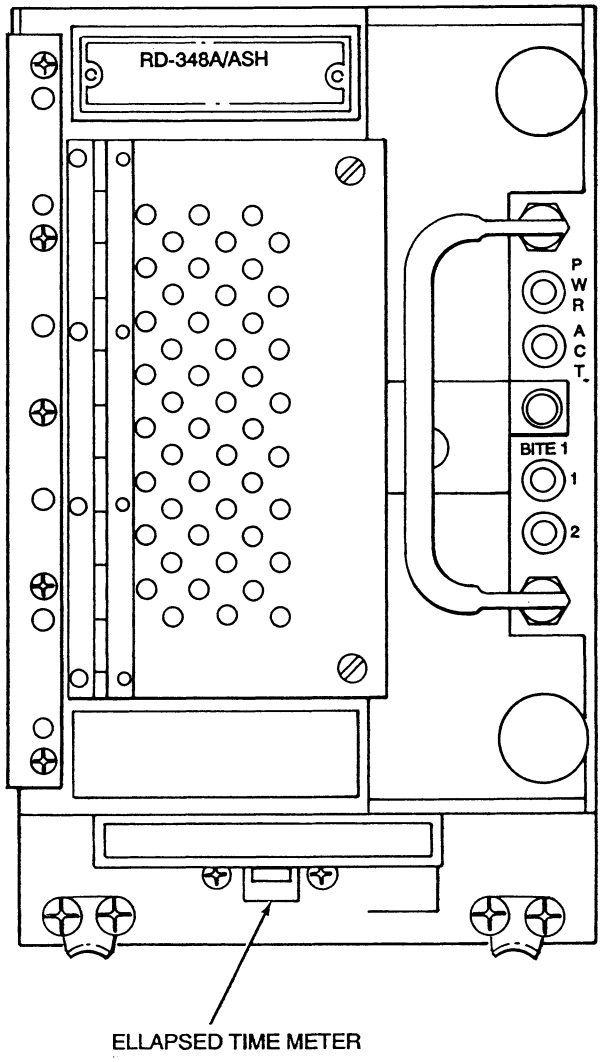

BITE	INDICATES
PWR (Power)	When on, indicates that the DMTU power supply voltages are present and within tolerances. An out-of-tolerance voltage will cause the PWR indication to extinguish.
ACT (Activity)	When on, indicates that the DMTU is being accessed by the GPDC. DMTU/ GPDC communications are good.
BITE 1	When on, indicates the BIT circuitry has determined that the TC and associated components are operable. When off, indicates one of the following: 1. TC is bad. 2. TC has not been installed. 3. DMTU door has not been properly secured.
BITE 2	When on, indicates that the GPDC interface electronics are operable, and the DMTU will operate correctly. When off or blinking, indicates that the DMTU is bad.

Figure 1-8. Digital Memory Unit Bites

1.2 TACTICAL DISPLAY SYSTEM

1.2.1 Introduction. The tactical display hardware is listed in Figure 1-9.

The following components comprise the TDS:

1. Three MPDs
2. One pilot display
3. Two UDGs.

The TDS is the primary means used by the GPDC to present information to the operators. There are three MPDs which, with a few exceptions, can present all pertinent mission data developed within the aircraft. There is one pilot display that is limited to displaying the tactical plot format.

Tactical displays are oriented to true North. The track vector actually displayed reflects the active heading source as listed in the NAV PARAMETERS Tableau. Display of a pure magnetic tactical plot is not desirable as all coordinates are measured/computed as latitude/longitude and significant error would result.

The GPDC outputs digital and analog information that is formatted for operator use through the TDS.

FO-1 through FO-4 show the TDS component locations at each crew station.

The TDS transforms digital and analog signals from the GPDC aircraft systems into pictorial displays of scan converted radar and FLIR. The TDS also presents words, numbers, and a tactical plot depicting aircraft, sonobuoy and contact positions, lines of bearing, range, radius, and other graphic symbols to illustrate the tactical situation. The TDS interfaces with the GPDC, FLIR and radar (Figure 1-11.)

The ESM, navigation, armament, communications, and INCOS systems do not communicate directly with the TDS. Instead, these systems send data to the GPDC which converts the data to a format compatible with the TDS. The operator accesses these data through the INCOS.

The GPDC sends commands to the UDGs, which interprets them, determines the TDS operation mode, and generates the requested symbols or displays. The UDGs, under GPDC control, also regulate these data sources from FLIR and radar to allow direct interface between these systems and the TACCO, SENSO, and COTAC displays.

The pilot display is slaved to the GPDC TACCO output through the UDG 1. The COTAC MPD receives video from UDG 2 and additionally receives signals directly from the FLIR and radar scan converter. The TACCO and SENSO MPDs display video from UDG 1 and UDG 2, respectively, and additionally receive data from the FLIR and radar scan converter.

1.2.2 Universal Display Generator. Two UDGs, located in the top left internal avionics rack, are stand-alone microprocessors capable of driving the TACCO, SENSO, pilot and COTAC displays (Figure 1-10). The tactical display system interface (Figure 1-11), shows the interface between the UDGs, the GPDC, and the tactical displays. Power is supplied by the DISPLAY GENERATOR power switch located on the TACCO overhead panel.

TYPE DESIGNATOR	NOMENCLATURE	COMMON TERMINOLOGY	LOCATION
CV-3853A/ASA-82B	Digital-to-Analog Converter	Universal Display Generator (UDG)	Left avionics rack
IP-1051/ASA-82	Tactical Indicator	Pilot Display	Pilot right center instrument panel
IP-1053/ASA-82	Tactical Indicator	COTAC Multipurpose Display (MPD)	COTAC left center instrument panel
IP-1054/ASA-82	Tactical-Acoustic Indicator	TACCO Multipurpose Display (MPD)	TACCO center panel
IP-1054/ASA-82	Tactical-Acoustic Indicator	SENSO Multipurpose Display (MPD)	SENSO center panel

Figure 1-9. Tactical Display System Components

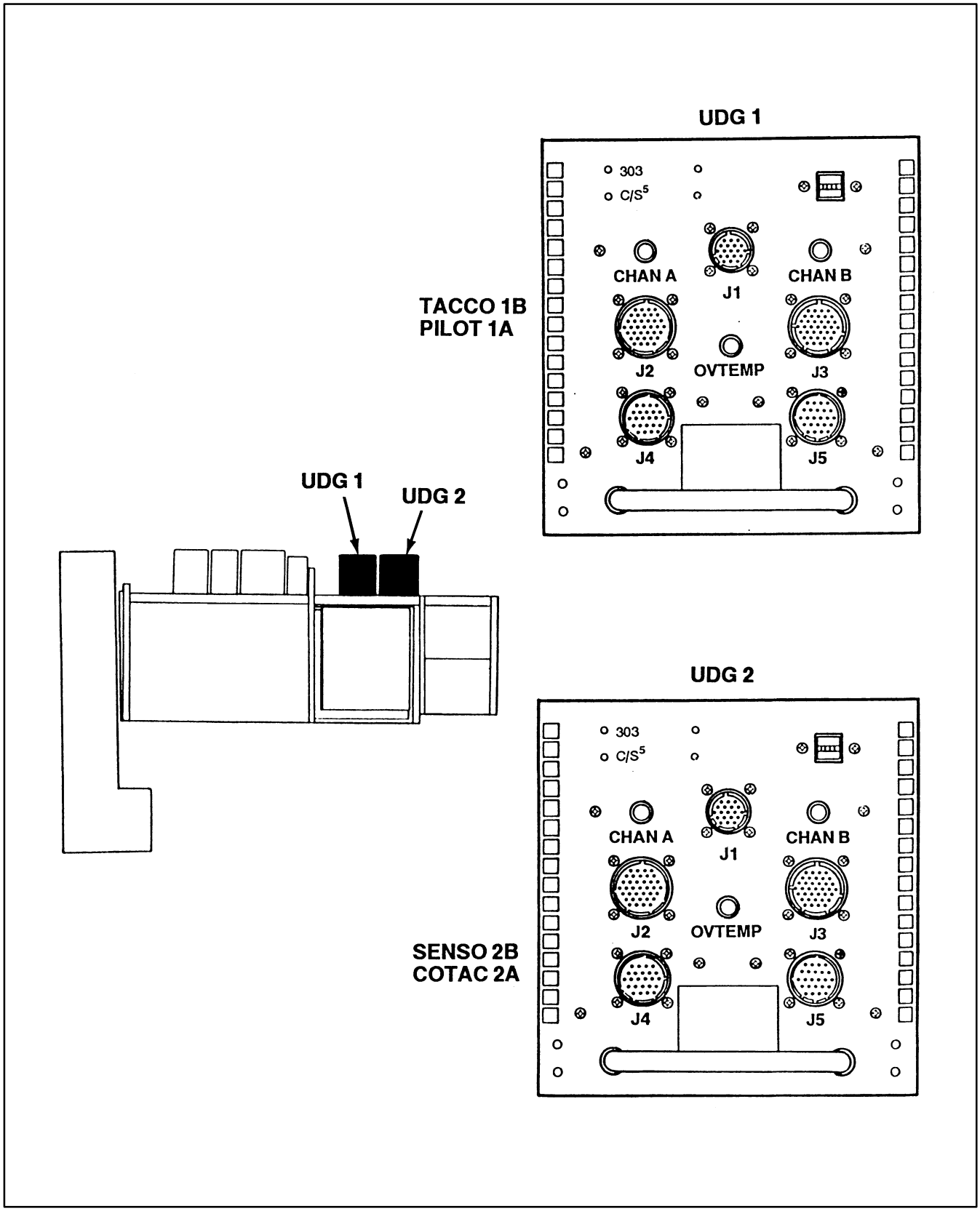

Figure 1-10. Universal Display Generator Location in Left Internal Rack

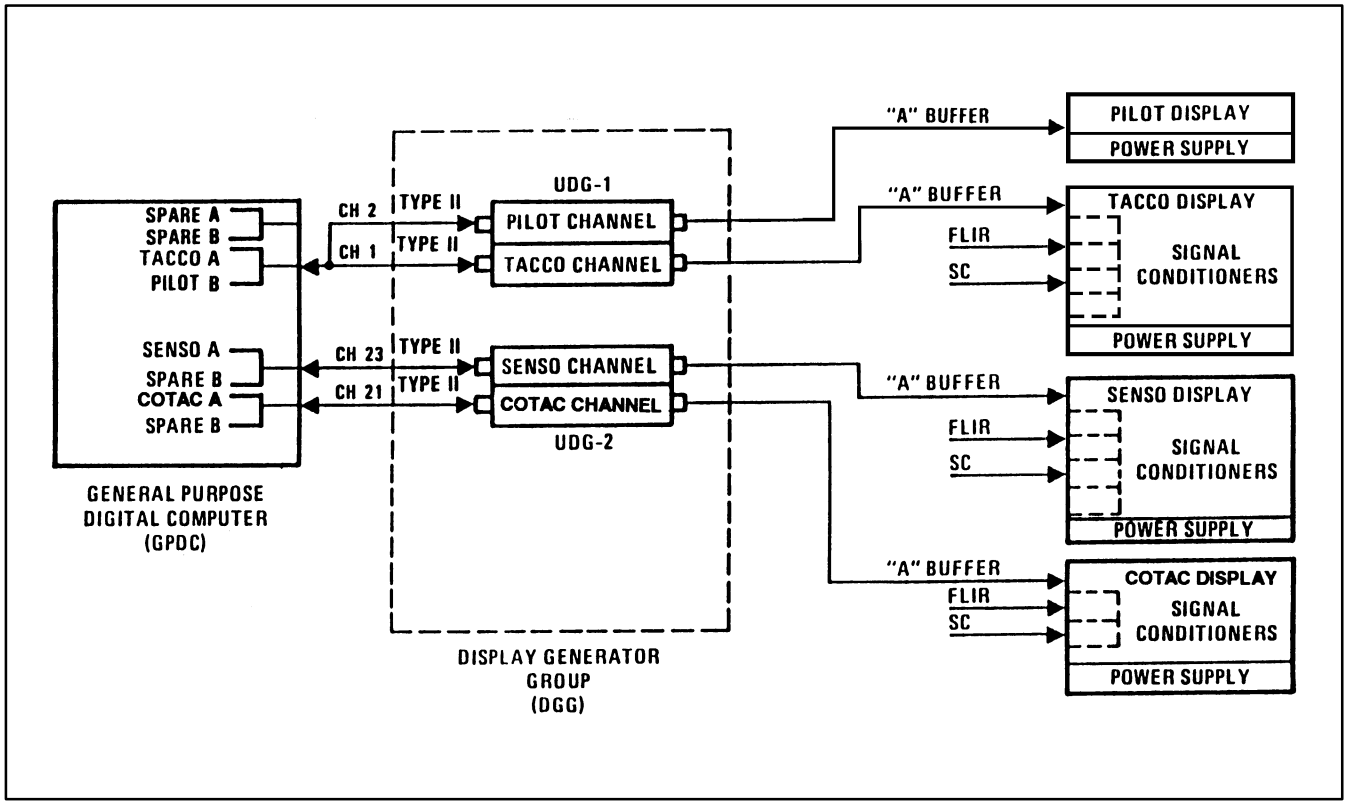

Figure 1-11. S-3B Universal Display Generator Configuration

The UDGs generate graphic symbols including alphanumerics (letters and numbers), conics (curved lines), and vectors (straight lines). These graphic symbols are sent to each MPD and the pilot display. However, the UDGs do not send all data types to all displays. Data display capabilities for the four TDS display units are summarized in Figure 1-12. The UDGs also position all video data in the proper location on each display.

The UDGs provide an interface between the digital data generated by the GPDC and the analog data required by the displays in order to display video information on the four display units. Each UDG consists of two independent and identical channels. The UDG software resides within each of these channels. Two UDGs form a DGG that is part of the TDS. TDS control is provided by the GPDC. The GPDC provides display data and control commands to the various UDG channels through three Type II serial data channels. A fourth Type II channel is available, but currently unused. Each Type II has access to two data buffers within the GPDC, buffers A and B.

Data transfer for both the TACCO (A buffer) and pilot (B buffer) displays is provided on one Type II channel. In this case, the two channels within a UDG operate in a master/slave mode with the TACCO display always having priority (Figure 1-11). Each UDG channel can drive any of the four displays; however, in a degraded mode switching for the UDG channels is not provided. Thus, if a display is lost because of a UDG channel failure, the display will stay lost unless the cables are switched. This is not a recommended in-flight procedure.

There are two operating modes for the UDG. In the data frame processing mode, the UDG receives from the GPDC all data currently requiring display by the TDS. The second operating mode is the selective buffer update mode. Rather than sending all data that needs to be displayed, the GPDC only transmits new display information or an update to old display information. The GPDC, by only transmitting information when it has changed, allows the UDG to be ready to accept and process data at a greater rate.

1.2.3 Displays

1.2.3.1 Pilot Display. The pilot display presents the key elements of the TAC PLOT, Harpoon targeting data, ESM threat warning, selected alerts, and peripheral readout information.

DATA	TACCO MPD	SENSO MPD	COTAC MPD	PILOT DISPLAY
Alerts and Cues	X	X	X	Alerts only
Tactical Plot	X	X	X	X
Test Patterns	X	X	X	X
Tableaus	X	X	X	
FLIR	X	X	X	
S/C Radar	X	X	X	

Figure 1-12. Tactical Display System Capabilities

These data presented on the pilot display are produced by the GPDC, and are controlled by the crewmembers through their INCOS trays/panels.

The basic pilot display format is shown in Figure 1-13.

The pilot TDS components and interface are listed in Figure 1-14.

1.2.3.2 COTAC MPD. The COTAC display system provides video presentations of:

1. Alerts and cues from the GPDC
2. Tableaus containing GPDC stored data
3. Tactical plot (TAC PLOT) composed of symbols, vectors, and conics
4. FLIR
5. Scan-converted radar
6. Test patterns.

The basic COTAC MPD display format is shown in Figure 1-15. The tableau area on the COTAC MPD displays one-half of a page of tableau at a time.

The COTAC TDS components and their interfaces are listed in Figure 1-16.

1.2.3.3 TACCO MPD. The TACCO display system provides video presentations of:

1. Alerts and cues from the GPDC
2. Tableaus containing GPDC stored data
3. TAC PLOT composed of symbols, vectors, and conics
4. FLIR
5. Scan-converted radar
6. Test patterns.

The TACCO and SENSO MPD display formats are identical (Figure 1-17).

The TACCO tactical display system components and their interfaces are listed in Figure 1-18.

1.2.3.4 SENSO MPD. The SENSO display system provides all video presentations listed in the TACCO display system description (Figure 1-19).

1.2.4 Display Off-Line Controls. Adjacent to each display is a panel with switches that control display power; adjust display brightness, focus, and contrast; and conduct off-line testing of each display (BITE). The display becomes stable in less than 2 minutes after power application. The control panels, the functional description, and test patterns are shown in Figures 1-20 through l-25.

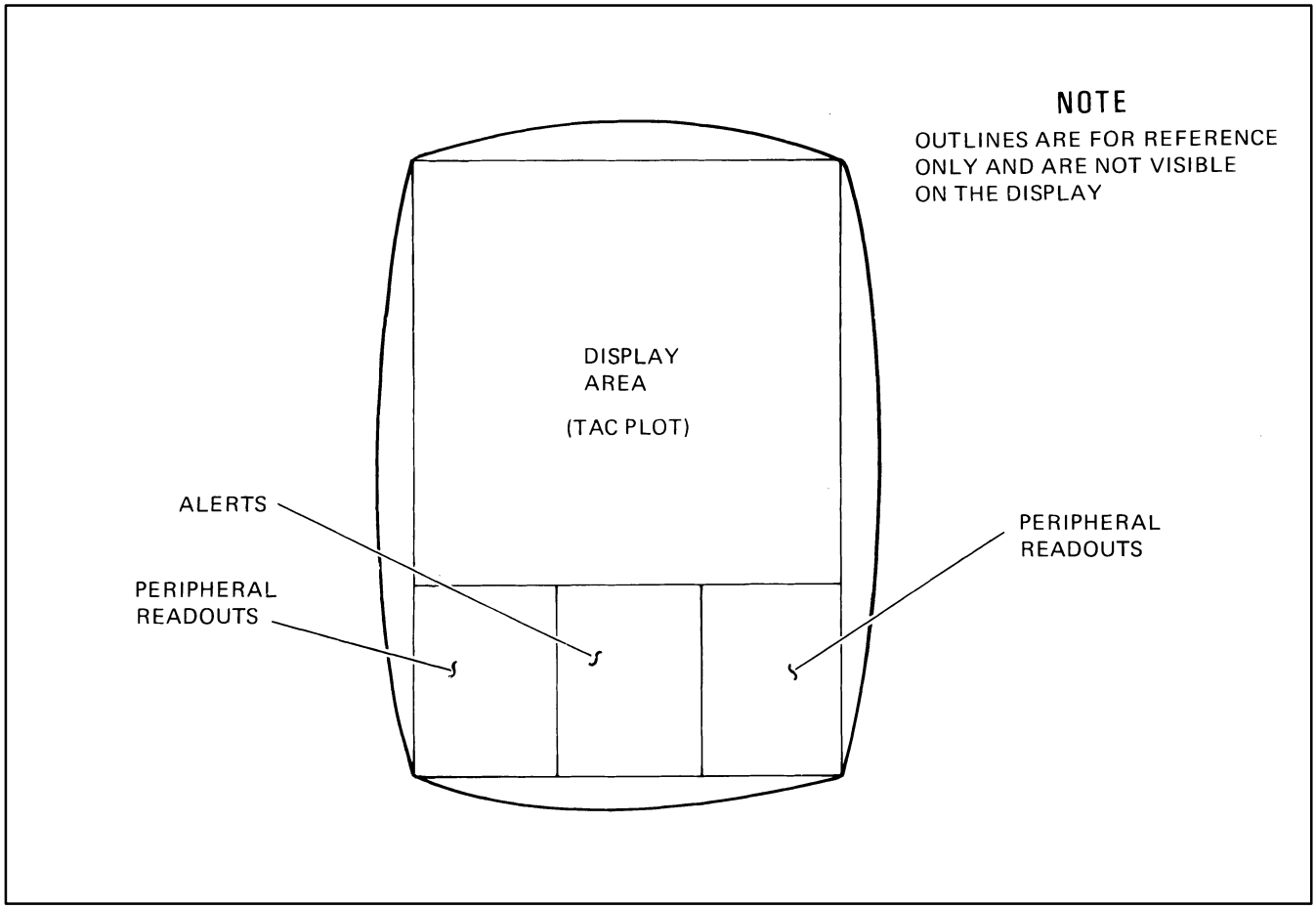

Figure 1-13. Pilot Display Format

TYPE DESIGNATOR	NOMENCLATURE	COMMON TERMINOLOGY	LOCATION
IP-1051/ASA-82	Tactical Indicator	Pilot Display	Pilot center instrumental panel
CV-3853A/ASA-82B	Digital-to-Analog Converter	Universal Display Generator (UDG)	Left avionics rack
PILOT TACTICAL SYSTEM INTERFACES			
C-8862/ASQ-147	Control Panel	Pilot Display Control	Pilot left console

Figure 1-14. Pilot Tactical Display System Components and Interface

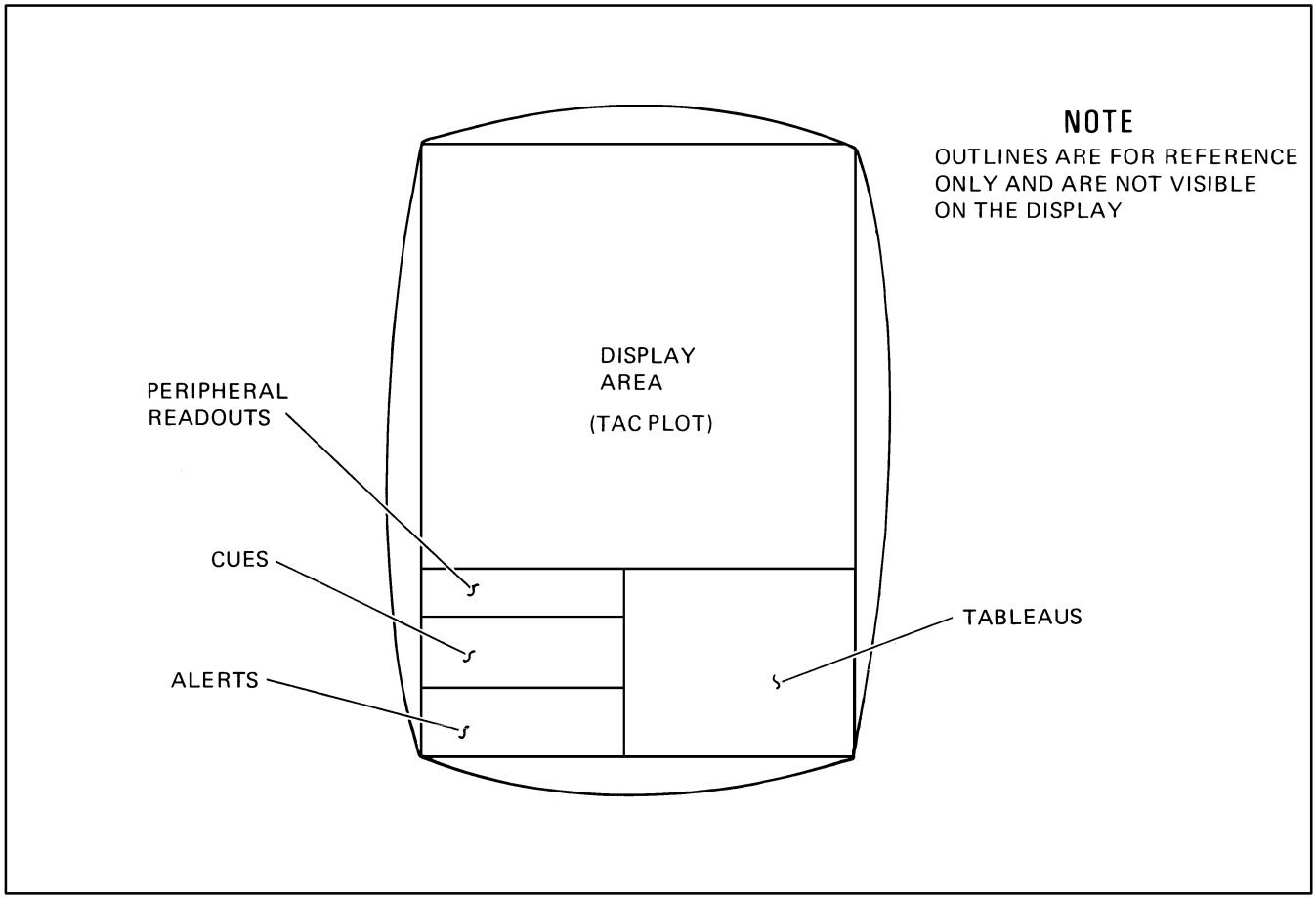

Figure 1-15. COTAC MPD Format

TYPE DESIGNATOR	NOMENCLATURE	COMMON TERMINOLOGY	LOCATION
IP-1053/ASA-82	Tactical Indicator	COTAC Multipurpose Display Unit (MPD)	Left center of COTAC instrument panel
CV-3853A/ASA-82B	Digital-to-Analog Converter	Universal Display Generator (UDG)	Left avionics rack
COTAC TACTICAL DISPLAY SYSTEM INTERFACES			
C-8859/ASQ-147	Computer-Indicator Control	COTAC INCOS Control Panel	Right console in COTAC station.
AN/AYK-10B(V)1	Digital Computer	General Purpose Digital Computer (GPDC)	Aft section of internal electronics bay

Figure 1-16. COTAC Tactical Display System Components and Interfaces

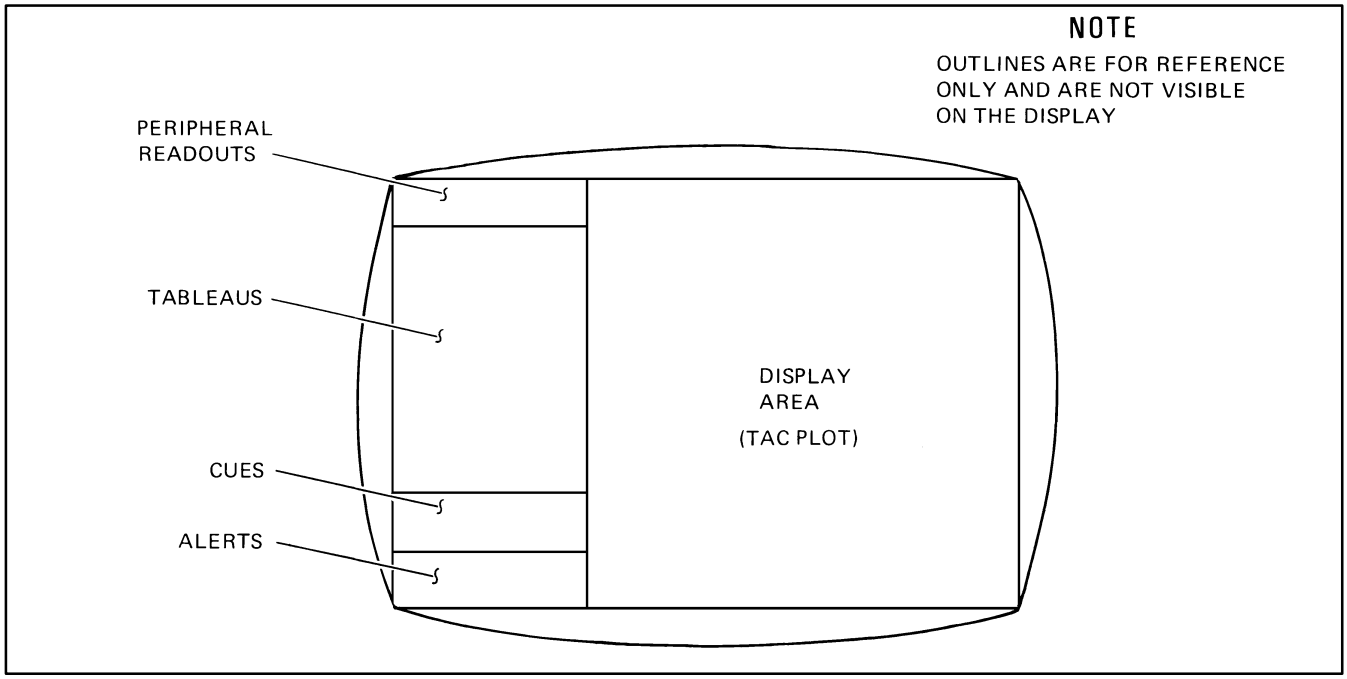

Figure 1-17. TACCO/SENSO MPD Format

TYPE DESIGNATOR	NOMENCLATURE	COMMON TERMINOLOGY	LOCATION
IP-1054/ASA-82	Tactical Indicator	TACCO Multipurpose Display Unit (MPD)	TACCO station
C-3853A/ASA-82B	Digital-to-Analog Converter	Universal Display Generator (UDG)	Left avionics rack
TACCO TACTICAL DISPLAY SYSTEM INTERFACES			
C-8860/ASQ-147	Computer-Indicator Control	INCOS Tray	TACCO station
AN/AYK-10B(V)1	General Purpose Digital Computer	GPDC	Aft section of internal electronics racks

Figure 1-18. TACCO Tactical Display System Components and Interfaces

TYPE DESIGNATOR	NOMENCLATURE	COMMON TERMINOLOGY	LOCATION
IP-1054/ASA-82	Tactical Indicator	MPD	SENSO station
CV-3853A/ASA-82B	Digital-to-Analog Converter	UDG	Left avionics rack
SENSO DISPLAY SYSTEM INTERFACES			
AN/AYK-10B(V)1	General Purpose Digital Computer	GPDC	Center internal bay
C-8861/ASQ-147	Computer-Indicator Control	INCOS Tray	SENSO station

Figure 1-19. SENSO Display System Components and Interfaces

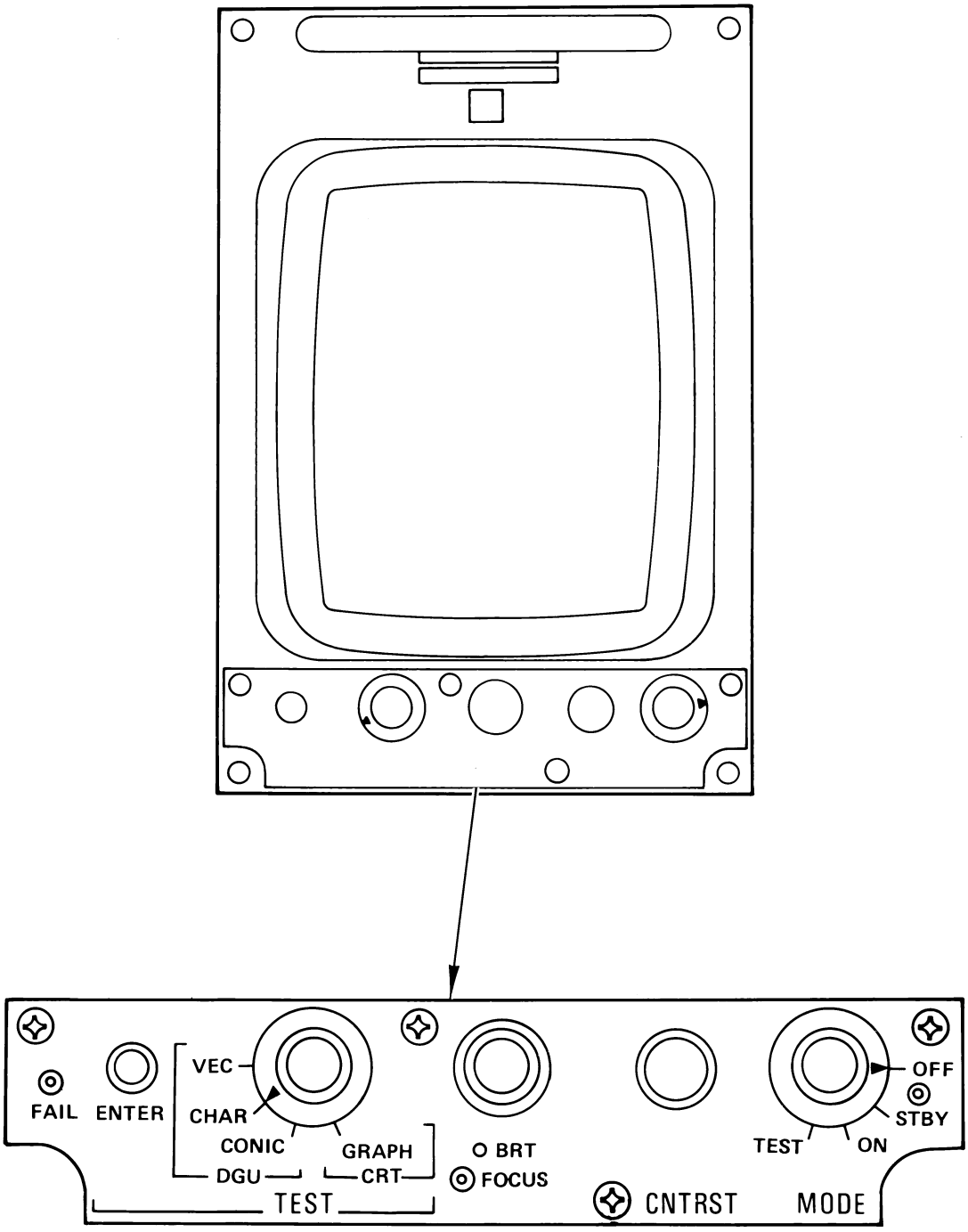

Figure 1-20. Pilot Display Off-Line Controls (Sheet 1 of 2)

CONTROL	FUNCTION
FAIL indicator	The FAIL indicator is set (white flag) by pressing ENTER with the TEST switch in the GRAPH position.
ENTER pushbutton	ENTER is enabled when the MODE switch is in the TEST position. Pressing ENTER when the TEST switch is in any of the DGU (UDG) positions, initiates a UDG self-test on the pilot channel.
TEST switch	The TEST switch is a four-position rotary switch divided into two bracketed sections: UDG and CRT.
DGU (UDG) section:	The DGU (UDG) section enables a test of the UDG graphic generations and displays the composites test pattern (Figure 1-23). The test and display are enabled in any of three switch positions in the UDG section. The switch positions within the UDG section are used to report three different types of failure: VEC, CHAR, and CONIC.
VEC	Used to report a failure in the vector generator (ENTER is then pressed).
CHAR	Used to report a failure in the character generator (ENTER is then pressed).
CONIC	Used to report a failure in the conic generator (ENTER is then the pressed).
CRT section:	
GRAPH	Generates CRT graph test pattern (see Figure 1-24). Reports a failure of the display when ENTER is pressed.
BRT control	BRT (inner knob) controls the display brightness.
FOCUS control	FOCUS (outer knob) controls the display image sharpness.
CNTRST control	Controls the display contrast. Effectively functions the same as the brightness control.
MODE switch:	
OFF	Disconnects power from the display and resets the power indicator flag black.
STBY	Applies filament power to the display and sets the power indicator flag white. (It is not necessary to stop at STBY.)
ON	Places the display in full on-line operation with the GPDC.
TEST	Connects the FAIL indicator, ENTER pushbutton, and the rotary TEST switch into the circuit.

Figure 1-20. Pilot Display Off-Line Controls (Sheet 2)

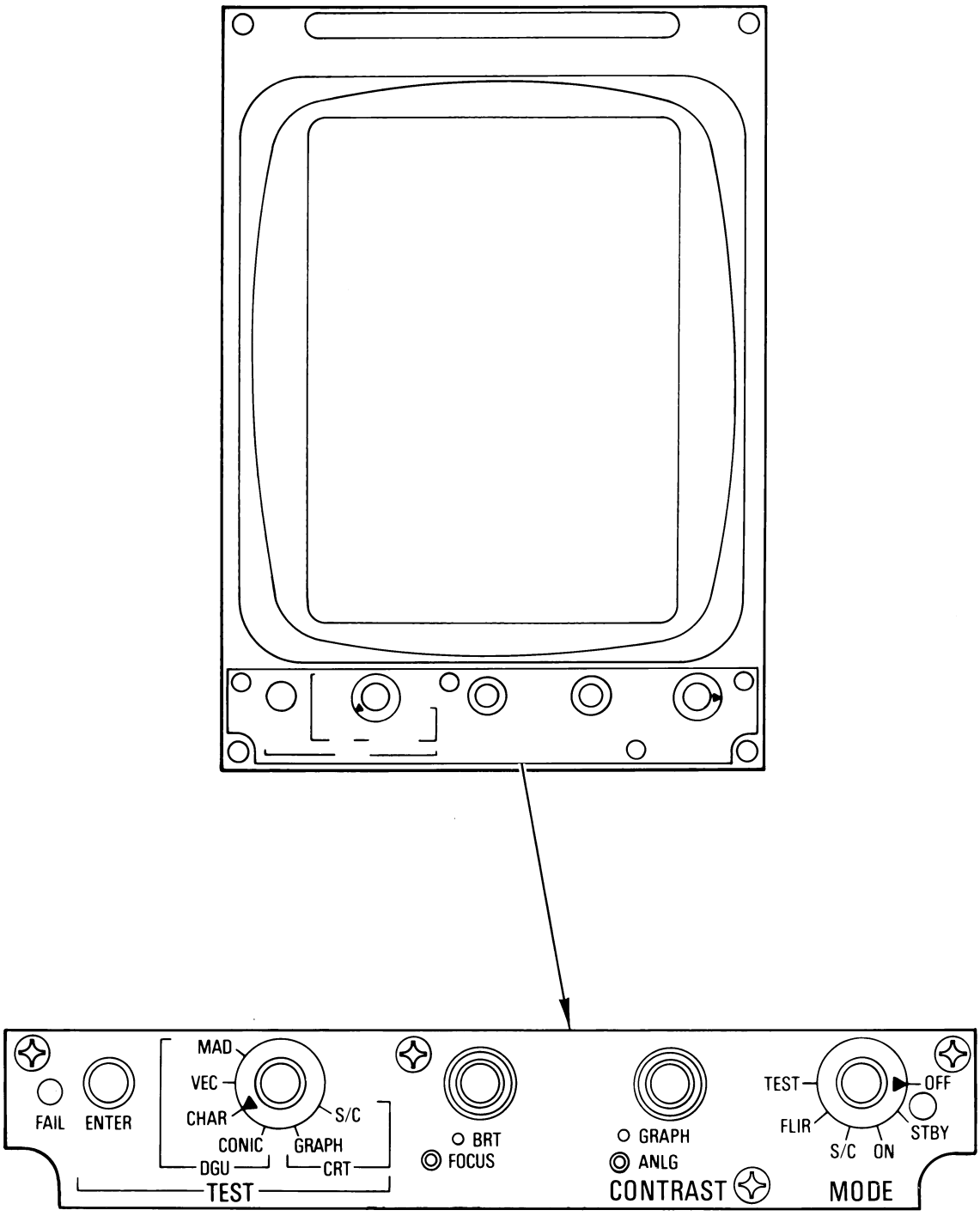

Figure 1-21. COTAC MPD Off-Line Controls (Sheet 1 of 2)

CONTROL	FUNCTION
FAIL indicator	The FAIL indicator is set (white flag) by pressing ENTER with the TEST switch in the GRAPHIC or S/C position.
ENTER pushbutton	ENTER is enabled when the MODE switch is in the TEST position. Pressing ENTER when the TEST switch is in any of the DGU (UDG) positions initiates a UDG self-test of the COTAC channel.
TEST switch:	Functions same as TEST switch on pilot display.
DGU (UDG) section:	When the TEST switch is in any one of the four DGU(UDG) positions the composite test pattern is displayed (Figure 1-23).
MAD	Used to report a failure of the MAD display portion of the composite test pattern.
VEC	Used to report a failure of the vector position of the composite test pattern.
CHAR	Used to report a failure in the character generator when ENTER is pressed.
CONIC	Used to report a failure in the conic generator when ENTER is pressed.
CRT section:	
GRAPH	Generates CRT graph test pattern (see Figure 1-24). Reports failure in the display to the GPDC when ENTER is pressed. The FAIL indicator is set (white flag) on the display control panel.
S/C	Generates CRT S/C test pattern (see Figure 1-24). Reports failure to GPDC when ENTER is pressed. The FAIL indicator on display control panel is set (white flag).
BRT control	BRT (inner knob) controls the display brightness.
FOCUS control	FOCUS (outer knob) controls the display image sharpness.
CONTRAST control:	
GRAPH	GRAPH (inner knob) controls the contrast of the graphic video (symbols, vectors and conics).
ANLG	ANLG (outer knob) controls the contrast of the analog video (radar and FLIR).
MODE switch:	
OFF	Disconnects power from the display and resets power indicator flag back.
STBY	Applies filament power to the display and sets the power indicator flag white. (It is not necessary to stop at STBY.)
ON	Places the display in full on-line operation with the GPDC.
S/C	Provides a Scan-Converted (S/C) radar display in the event of failure of the normal control circuitry.
FLIR	Provides FLIR display in the event of failure of the normal control circuitry.
TEST	Connects FAIL indicator, Enter pushbutton and rotary TEST switch in the circuit for test purposes.

Figure 1-21. COTAC MPD Off-Line Controls (Sheet 2)

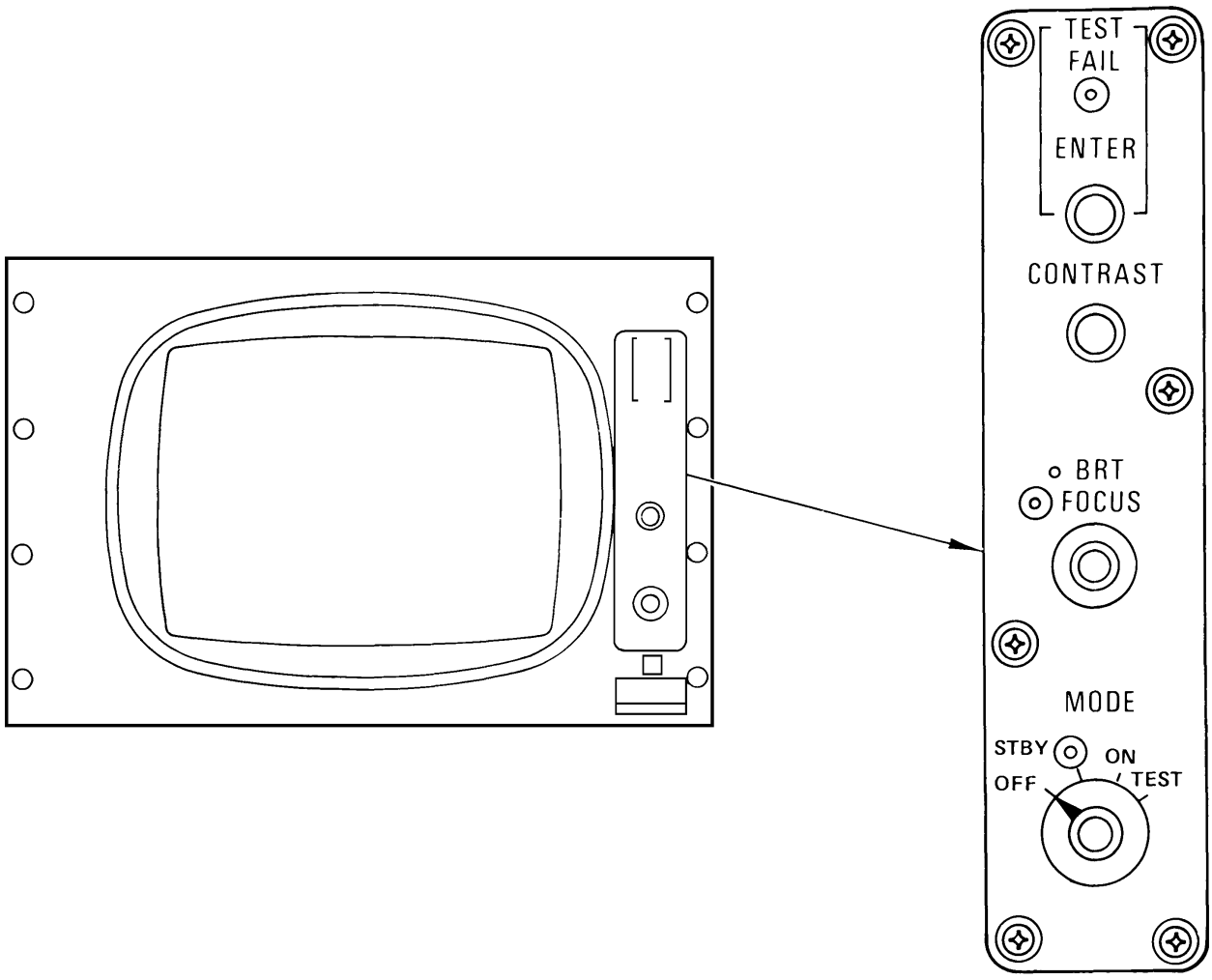

CONTROL	FUNCTION
FAIL indicator	Indicator is set (white center) by pressing ENTER with MODE switch in TEST and rotary test switch in any CRT section position.
ENTER button	ENTER is enabled in the MODE switch TEST position. Pressing ENTER when the TEST switch is in any of the DGU (UDG) positions initiates a self-test of the respective UDG channel.
TEST switch	Functions same as TEST switch on pilot display.
DGU (UDG) section:	When the TEST switch is in any position within the DGU (UDG) sections, the composite test pattern is displayed (see Figure 1-23).
CHAR	Generates composite test pattern (see Figure 1-23). Reports failure in character generator to GPDC and sets UDG BITE indicator when ENTER is pressed.
CONIC	Same as CHAR above. Reports failure of conic generator to GPDC and sets UDG BITE indicator when ENTER is pressed.
VEC	Same as CHAR above. Reports failure in vector generator and sets UDG BITE indicator when ENTER is pressed.
MAD	Same as CHAR above. Reports failure in MAD generation to GPDC and sets UDG BITE indicator when ENTER is pressed.

Figure 1-22. TACCO/SENSO MPD Off-Line Controls (Sheet 1 of 2)

CONTROL	FUNCTION
CRT section:	
S/C	Generates CRT S/C test pattern (Figure 1-24). Reports a failure to the GPDC and sets display FAIL indicator by pressing ENTER.
ACST	Generates CRT ACST test pattern (Figure 1-25). If a faulty pattern results, the operator reports a failure by pressing ENTER, reports the failure to GPDC, and sets FAIL indicator on display control panel.
GRAPH	Generates CRT graph test pattern as shown in Figure 1-24. Reports a failure (discrepancy between display and pattern as shown in Figure 1-24) to the GPDC and sets FAIL indicator (white flag) on display control panel.
BRT Control	The BRT (inner) controls the display brightness.
FOCUS control	The FOCUS (outer) controls the display clarity.
CONTRAST control:	
GRAPH	The GRAPH (inner) controls the contrast of the graphic video (symbols, vectors, conics).
ANLG	The ANLG (outer) controls the contrast of the analog video (radar, FLIR, acoustics).
MODE switch:	
OFF	Disconnects power from display. Resets power indicator flag black.
STBY	Applies filament power to display and sets power flag white. (It is not necessary to stop at STBY.)
ON	Places display in full on-line operation with the GPDC.
RR	Not functional.
S/C	Provides Scan-Converted (S/C) radar display (off-line) in the event of a failure in the normal control circuitry.
FLIR	Provides FLIR display (off-line) in the event of a failure in the normal control circuitry.
ACST	Provides Test Display Symbology when in test mode of MPD. **Note** Selecting RR, S/C, FLIR, or ACST on TACCO MPD MODE switch will cause the pilot to lose his MPD display. Pilot MPD display will be regained when TACCO MODE switch is placed back to the ON position.
TEST	Energizes the BITE system and connects TEST FAIL indicator, ENTER pushbutton, and rotary TEST switch into circuit.

Figure 1-22. TACCO/SENSO MPD Off-Line Controls (Sheet 2)

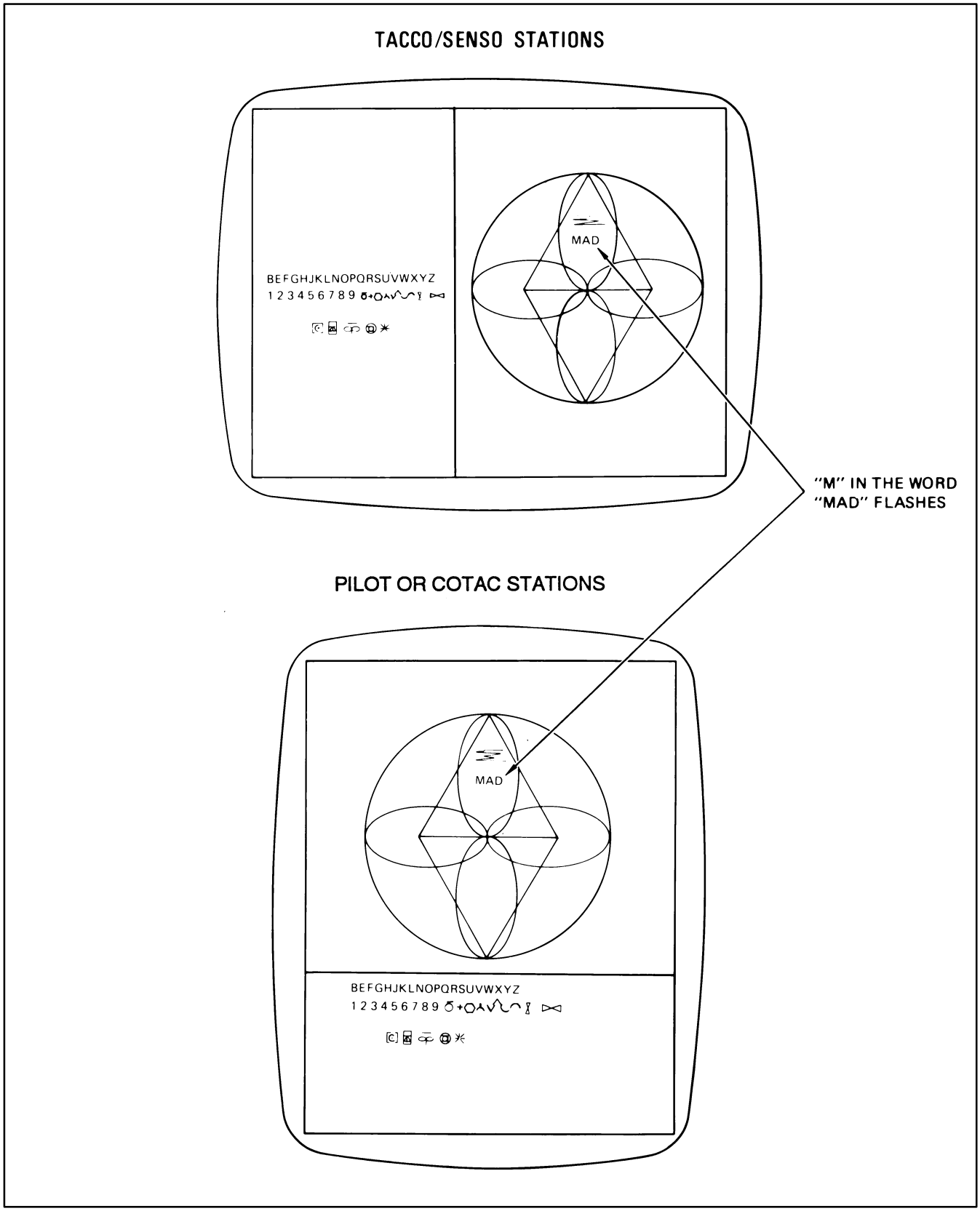

Figure 1-23. UDG Test Patterns

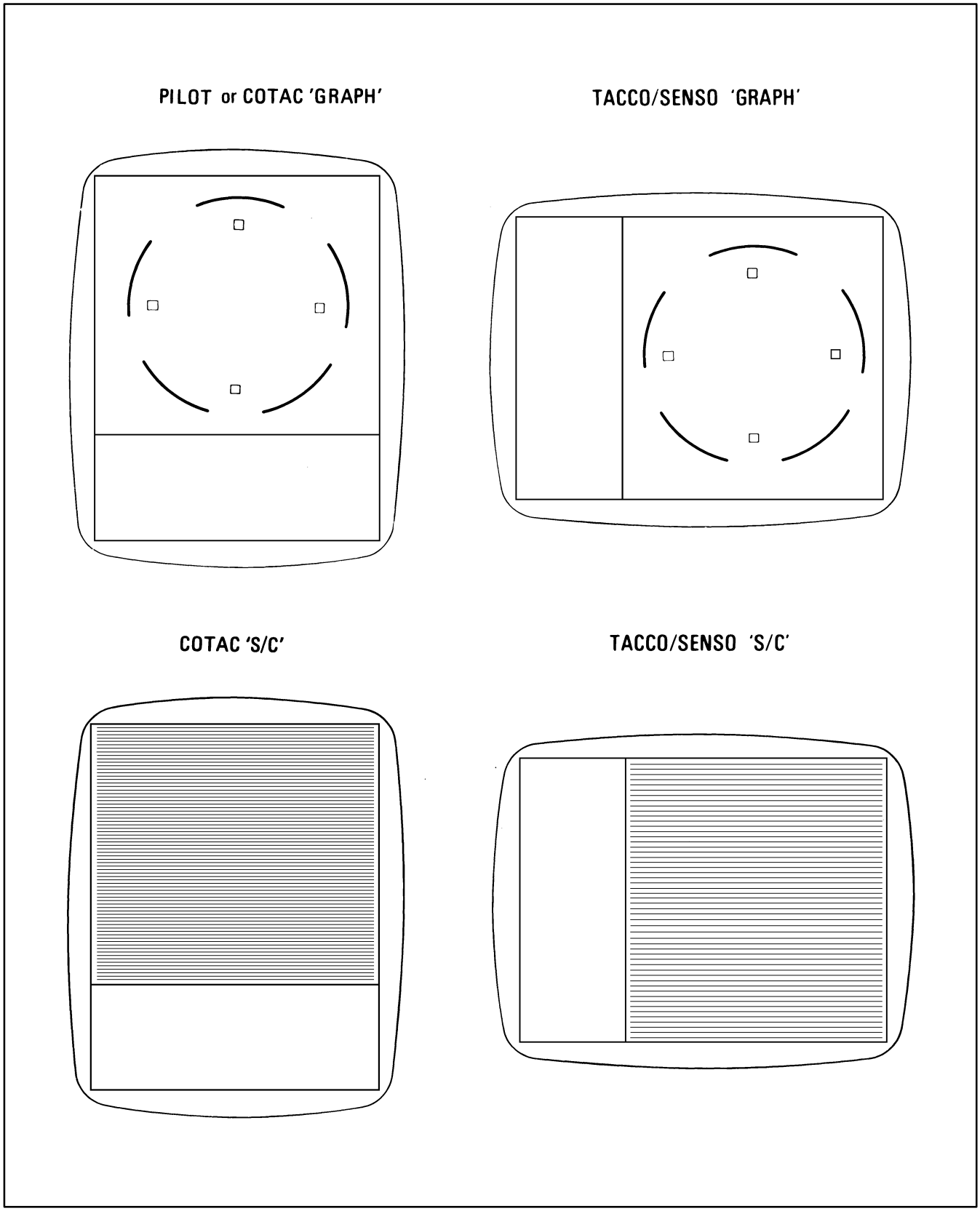

Figure 1-24. CRT Test Patterns

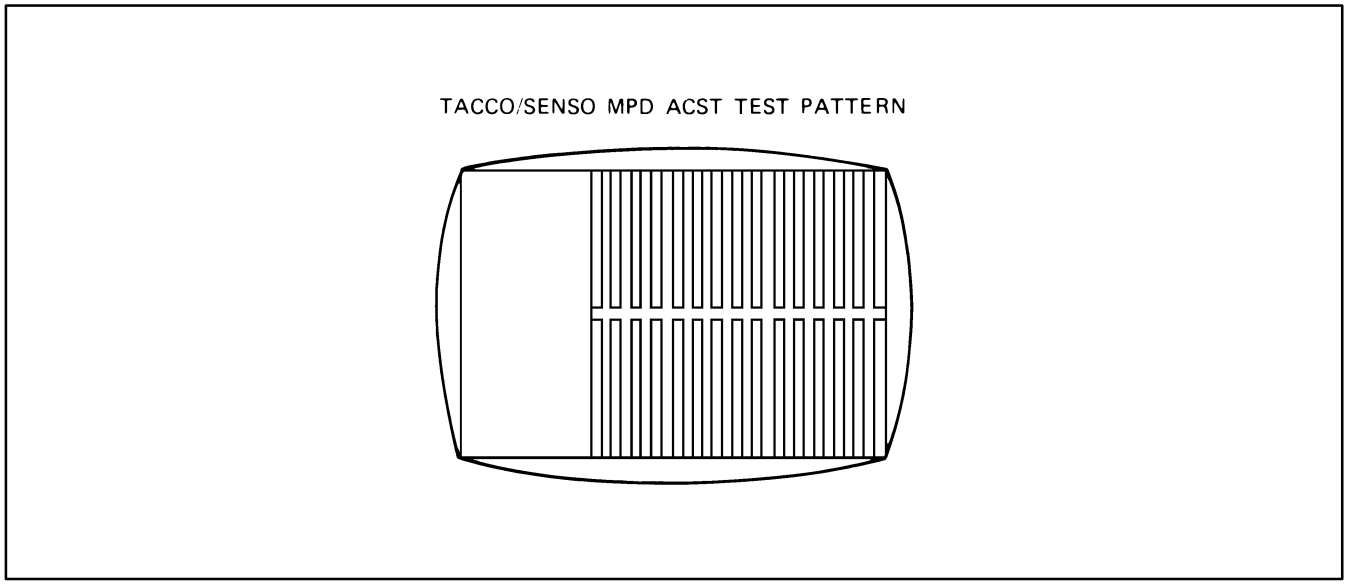

Figure 1-25. CRT Acoustic Test Patterns

1.2.5 Power Control Panel. The power control panel (Figure 1-26) applies power to the computer group and the DMTU when the COMPUTER GROUP switch is placed in the ON position. The COMPUTER RESTART momentary switch initiates the loading of the operational program into the GPDC when placed in the ON position by displaying the SEL PROGRAM cue on the MPD.

1.3 OPERATIONAL PROGRAM LOADING

1.3.1 Normal Load Procedures

CAUTION

To prevent damage to the TC, ensure the COMPUTER GROUP switch on the power control panel is in the OFF position or the DGTL MAG TAPE circuit breaker (1-I-7) is pulled before TC insertion or removal.

1. Transportable cartridge installation.

    a. Turn two knurled fastener knobs located at the right-hand side of the DMTU front panel to the fully counterclockwise (disengaged) position and open the TC access door to the fully open position.

    b. Carefully insert the removable TC into the DMTU TC cavity. Ensure that the connector located at the bottom rear panel of the TC is firmly seated.

    c. Close the TC access door and turn two knurled fasteners on the DMTU front panel to the fully clockwise (engaged) position.

    d. Reapply power to the DMTU by setting the DGTL MAG TAPE circuit breaker (1-I-7, left-hinged circuit breaker panel) to the ON position.

2. APU — ON.

3. APU generator switch/air-conditioning switch — ON.

CAUTION

To reduce the probability of overheating and subsequent failure of internal avionics and GPDC, precooling should be to 80 °F.

4. The following is the recommended loading procedure:

    a. Display generator power switch — ON.

    b. Display — ON/TEST.

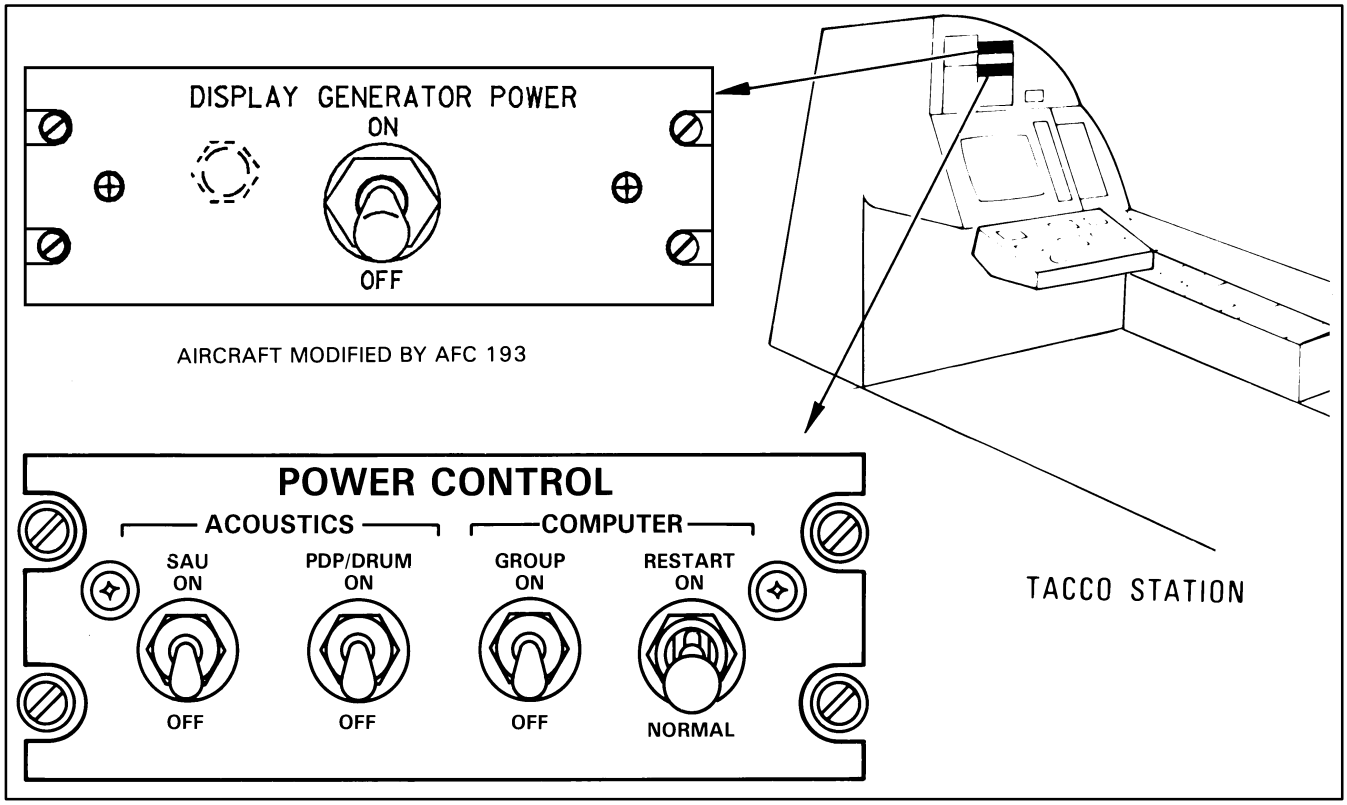

Figure 1-26. Power Control Panel

c. COMPUTER GROUP switch — ON.

d. ESM switch — AS REQUIRED.

5. COMPUTER RESTART switch — ON.

Once GPDC is successfully loaded and both engines are on line:

6. MPDs — OFF.

7. Power transients — EXECUTE.

Note

If power transients are conducted while the DMTU is attempting to read track 1, 3, or 7 peripheral software may be corrupted. Verify that the TC is on track 2, or 4 prior to executing transients.

8. MPDs — ON.

9. Check SENSO ICS for proper operation. If necessary, select OVERRIDE on the SENSO ICS panel.

WARNING

The COMM and NAV IND SYSTEMS TESTS (SAT) in the System Test Program shall not be used while airborne either individually or as a group when included under the selection of ALL SAT. The COMM SAT will render aircraft voice communications inoperable for several minutes. The NAV IND SAT will adversely affect attitude/heading sources such that loss of IMC flight capability could result.

The initial loading process begins with computer restart switch activation. This causes the 4K NDRO bootstrap program to perform several routines. The NDRO then attempts to find a load path using a combination of CP, IOC, and memory that is fully operational. This load path is usually CP 0, IOC 0, and MEM 0, and is indicated by the alert LOAD PATH 20. If this load path is not found, it will be indicated to the operator, after program initialization, by the display of a 1 instead of the usual 0 on line 23 of the PROGRAM STATUS Tableau. It can take the bootstrap a few

seconds or several minutes to find an operational load path depending on how many attempts are required.

The NDRO will load the SL located at the beginning of track 3 on the TC. The DRUM LOAD FAILURE alert will then be displayed along with the DMTU LOAD IN PROGRESS alert. The SL display format is then displayed at the TACCO, SENSO, and COTAC stations followed by the select program loader cue.

DRUM LOAD FAILURE
DMTU LOAD IN
PROGRESS

Upon initial program load, the operator responds to the select program loader cue by selecting option 1 (OPERATIONAL). With the selection of this option, the SL loads the OPLOAD. OPLOAD is located at the beginning of the operational program (or TMP) section of track 3. After several decision and selection cues have been completed, the OPLOAD loads the TMP into GPDC memory.

SEL PROGRAM
1 OPERATIONAL
2 OPERATIONAL CONT
3 SYSTEM TEST
4 GPDC DIAG RECYCLE

A cue enables the operator to select the applicable navigation suite on board the aircraft in the event that both NIU/NDCR channels are defective. An incorrect response to this loading cue will not affect proper NAV configuration initialization if there is at least one non-defective NIU/NDCR channel.

SEL NAV CONFIG
1 NIU
2 NDCR

For an automatic reload performed by common recovery (CR) portion of the executive, this previous cue response is inserted. For the UHF RADIO CHANNLS cue, the following apply during an automatic reload:

1. The cue will be redisplayed and require a new response if there is no SAFE DATA saved.

2. The cue will not be redisplayed when there is at least 1 block of SAFE DATA that has been saved.

UHF RADIO CHANNLS
1 LOAD FROM TC
2 BYPASS TC LOAD

If the DMTU has trouble reading certain records, the load will take extra time. Displayed track and record numbers indicate loading status.

After the operational program is loaded, the DMTU continues to read track 3 for insertion of preflight data. GPDC initialization is begun and the TC is positioned to start data extraction at the beginning of track 2. Program initialization is then completed with the INIT COMPLETE advisory displayed at all stations. The program is then ready for operator interface. Normal program loading and initialization takes approximately 1 to 2 minutes.

After the TMP is initialized, the ESM subprogram instructs the executive to load the peripheral software for the subsystems. After loading, the ESM subsystem is initialized. Peripheral software loading utilizes TC tracks 1, 3, and 7 and takes an additional 2 to 3 minutes. Peripheral software loading may be monitored in the DMTU EXPANDED SYSTEM Tableau.

1.3.2 Initialization

WARNING

Failure of a search store decoder may cause an inadvertent sonobuoy release. Prior to program initialization, power to the SESCOS must be removed by pulling the SEARCH STORES POWER and SEARCH STORES CONTROL circuit breakers and leaving the power secured at all times except when actually dropping buoys, when an inadvertent release would not be hazardous, or when single-engine gross weight/bingo considerations may require jettison of sonobuoy loads.

Initialization is the process of setting the GPDC and peripheral equipment to a predetermined known beginning point. The initialization subprogram initializes the avionic systems after the operational program loader completes the load process. During initialization, the following conditions are set:

1. Displays

    a. 32 nm scale

    b. Aircraft and hook symbols are at the center of the display

    c. Aircraft symbol is flashing, indicating system navigation has not commenced

    d. NAVIGATION PREFLIGHT Tableau is displayed at the COTAC station

    e. INDEX Tableau is displayed at the TACCO and SENSO stations.

2. COTAC INCOS

    a. Matrix select C is available

    b. PGM CTL (program control) options are available.

3. TACCO INCOS

    a. Matrix A REINIT (reinitialize) options are available

    b. Matrix B PRGM CONT (program control) options are available.

4. SENSO INCOS

    a. Matrix A REINIT (reinitialize) options are available

    b. Matrix B PRGM CONT (program control) options are available.

5. Navigation

    a. Not navigating

    b. Latitude indicates current aircraft latitude

    c. Longitude indicates current aircraft longitude

    d. Awaiting initial on-top or weight-off-wheel signal to commence navigating.

When this process has been completed, the following system alert is displayed:

INIT COMPLETE

The operational program is now loaded, initialized, and is ready for operator interface. The starting procedure, beginning with placing the COMPUTER RESTART switch to ON until the operational program is functioning automatically, takes from 1 to 2 minutes when no malfunctions are encountered.

After the operational program is loaded and initialized, the ESM system is loaded from track 7 from the DMTU. This peripheral software loading and initialization takes an additional 2 to 3 minutes.

1.3.3 Program Loading Faults. This section describes common faults and alerts that may be encountered during a load.

When the COMPUTER RESTART switch is placed to ON, the hardwired GPDC NDRO attempts to load the selection loader routine. After a valid operator response to the SEL PROGRAM cue, the selection loader will attempt to load the selected program using the same combination of CP, IOC, and memory used by NDRO to load the selection loader. It will use IOC-0 in its first attempt with the DMTU and switch to IOC-1. In this event, IOC-0 will be disabled and communications will be limited to the TACCO station only.

If the selection loader is unable to load from the DMTU, the load sequence is terminated and the following three line advisory is displayed for 10 seconds:

DISPLAYS GOING BLANK
FOR LOAD ATTEMPT
GPDC DIAG NEXT

In addition, all Type II input/output processing is terminated. The load is reinitialized on track 3. If the selection loader is successful in another attempt, it passes the parameters to the test loader informing it to keep the displays blank and load the GPDC diagnostics.

If no DMTU interrupt is received by either IOC, the selection loader displays the following alert and cue:

DGTL RCDR DEF
PRESS RESTART

In the event problems are encountered by the NDRO loader, up to 15 alternate load attempts can be made. As a result, cues or alerts may not appear on the MPD for a considerable period of time. When this occurs, the following procedure should be performed:

1. Wait 2 minutes, then place the COMPUTER RESTART switch to ON.

2. Wait at least another 5 minutes for indication of a load taking place (SELECTION LOAD appears on the MPD).

3. If SELECTION LOAD does not appear, check for the following conditions:

   a. All GPDC BITE indicators are set (showing a white center) indicating a GPDC failure that prevented the load taking place.

   b. DMTU BITE indicator is set indicating the GPDC is unable to communicate with the DMTU. A BITE indicator must be reset to black by a maintenance procedure.

   c. No BITE indicators are set indicating the GPDC is malfunctioning to the extent that it is unable to set any BITE indicators.

   d. The operator should check the DMTU circuit breaker, the DMTU BITE indicators or the pins of the DMTU.

   e. If the failure is intermittent, successful loading may be accomplished by repeating the starting procedure.

If the NDRO successfully loads the selection loader routine, the SEL PROGRAM cue is displayed.

Additionally, the selection loader can isolate hardware failures and displays the results in the SYSTEM STATUS Tableau.

When the operational program is selected, the selection loader routine loads the operational loader routine into memory. If the selection loader is unable to load the operational loader, the following advisory is displayed:

FAIL LOAD

The operator has three options:

1. Start over by reselecting the ON position of the COMPUTER RESTART switch and attempt to load a different program.

2. Try a different TC and start over.

3. Request maintenance to identify and repair the malfunction.

If the selection loader successfully loads the operational loader, the operational loader takes control and loads the remainder of the operational program. If the operation loader is unable to load the operational program, the following advisory is displayed:

BAD LOAD

The operator once again may respond as to FAIL LOAD.

When the operational program has been successfully loaded, the following advisory appears:

GOOD LOAD

After the operational loader is loading, if a CP fails, the following alert is displayed:

CP-X DEF
X = 0 or 1

This causes the loading process to stop and the following advisory is displayed:

BAD LOAD

The operator should check the failed hardware unit to see if a BITE indicator is set. The BITE indicator should be cleared before a reload is attempted.

1.3.3.1 IOC Faults. If an IOC fails, the operational loader causes the following alert to appear for approximately 10 seconds:

IOC-X DEF
X = 0 or 1

Upon IOC failure, only the TACCO INCOS tray and MPD are on line. All cues, alerts, and advisories appear on the TACCO MPD. All other displays remain blank.

The effect of an IOC failure is to be left with the COTAC MPD disabled, loss of data-link (CC disabled), loss of data extraction (DMTU write disabled), and loss of one HACLCS station (on-line). Additionally, program slowdown can be expected. The operator may alleviate the program slowdown by reducing the use of software functions.

1.3.3.2 Memory Faults

Note

Failure of one or more memory arrays results in an "F" load (NAV only).

If a memory fails, the operational loader causes the following alert to appear for approximately 10 seconds:

```
ARRAY DEF XX
XX = 0 THROUGH 15
```

A memory failure causes the selection loader to momentarily display the following advisory:

```
SYSTEM RELOAD
```

The operational loader then loads a degraded operational program and displays the following advisory:

```
OP DEGRADED SYS RELOAD
```

However, if a memory failure had been encountered by the selection loader routine, then the operational loader will load a degraded operational program and the following advisory is displayed:

```
OP DEGRADED SYSTEM LOAD
```

When initialization is complete (after the degraded system reload) the following alert appears:

```
INIT COMPLETE
```

1.3.4 Operational Continue Reload. An operational continue reload may be selected by reloading only through the INCOS RLOAD PRGRM option in the program control matrix. The operational continue load is available with a full system load or degraded load.

When operational continue is selected, the following cue is displayed:

```
 LOAD SAFE DATA
1 YES
2 NO
```

A response of either 1 or 2 to the LOAD SAFE DATA cue will result in a full reload.

If decision 1 is selected, the last set of safe data are loaded. If decision 2 is selected, preflight data are loaded.

If 2 NO is selected in response to the LOAD SAFE DATA cue, the following cueing sequence is displayed:

```
UHF RADIO CHANNLS
1 LOAD FROM TC
2 BYPASS TC LOAD
```

Response to the UHF RADIO CHANNLS cue requires a keyset entry of a desired number (1 or 2). During an OP CONTINUE reload, the SEL NAV CONFIG cue shall not be displayed. The UHF RADIO CHANNLS mandatory cue will be redisplayed and requires a new response when a reload is initiated by the RLOAD PRGM option select in the PRGM CONT matrix if no safe data exists or if the LOAD SAFE DATA option is not chosen.

When the operational continue load completes the load process, the following alert appears:

```
GOOD LOAD
```

When initialization is complete, the following alert appears:

```
INIT COMPLETE
```

1.3.5 Operational Program Degraded Modes. Hardware failures can occur within the DPS that allows the operational program to continue to function in a degraded mode.

1.3.5.1 CP Failure. If a CP is disabled as a result of a self-test, Class II interrupt, or power supply failure, the remaining CP attempts to update the SYSTEM STATUS Tableau and reinitialize the system. The system alert, ZZZZ CP-X DEF, is displayed. ZZZZ is time and X is the identification of the CP (either 0 or 1). An attempt is made to shut down the disabled CP and the event is extracted. If the other CP is already disabled, the GPDC attempts to enter NDRO for a system reload. If both CPs remain disabled, a load path will not be found and the program will not load.

The effect of a single CP failure is partial loss of processing capability, often indicated by program slowdown (time fails to update each second on the display and hook symbol response to trackball movement is slower). However, all functions remain available. The operator should reduce use of high demand software functions such as data-link and multifix tracks.

1.3.5.2 IOC Failure. If an IOC fails as a result of hardware action or if the operator disables an IOC in system status, the CP receiving notification causes the other CP to suspend processing and attempts to terminate all input-output activities. The defective IOC is disabled. The system reinitializes with the remaining IOC operating normally, and the pilot, SENSO, and TACCO displays initialize. The system alert, ZZZZ IOC-X DEF, is displayed. The operator can reinitialize an IOC through system status, but cannot perform a carry-on. If a second IOC fails, NDRO is entered for a system reload and both IOCs are initialized.

The effect of an IOC failure is to be left with the COTAC MPD disabled, loss of data-link (CC disabled), loss of data extraction (DMTU write disabled) and loss of one HACLCS station (on-line). Additionally, program slowdown can be expected. The operator may alleviate the program slowdown by reducing the use of software functions.

1.3.5.3 GPDC Memory System Failures. Failure of any memory array results in an immediate degraded system reload.

Any computer load requires 96K of contiguous addressable memory. Failure to meet these requirements results in no load (see Figure 1-27).

The degraded system initializes with an F LOAD and the subprograms available for each type of load are

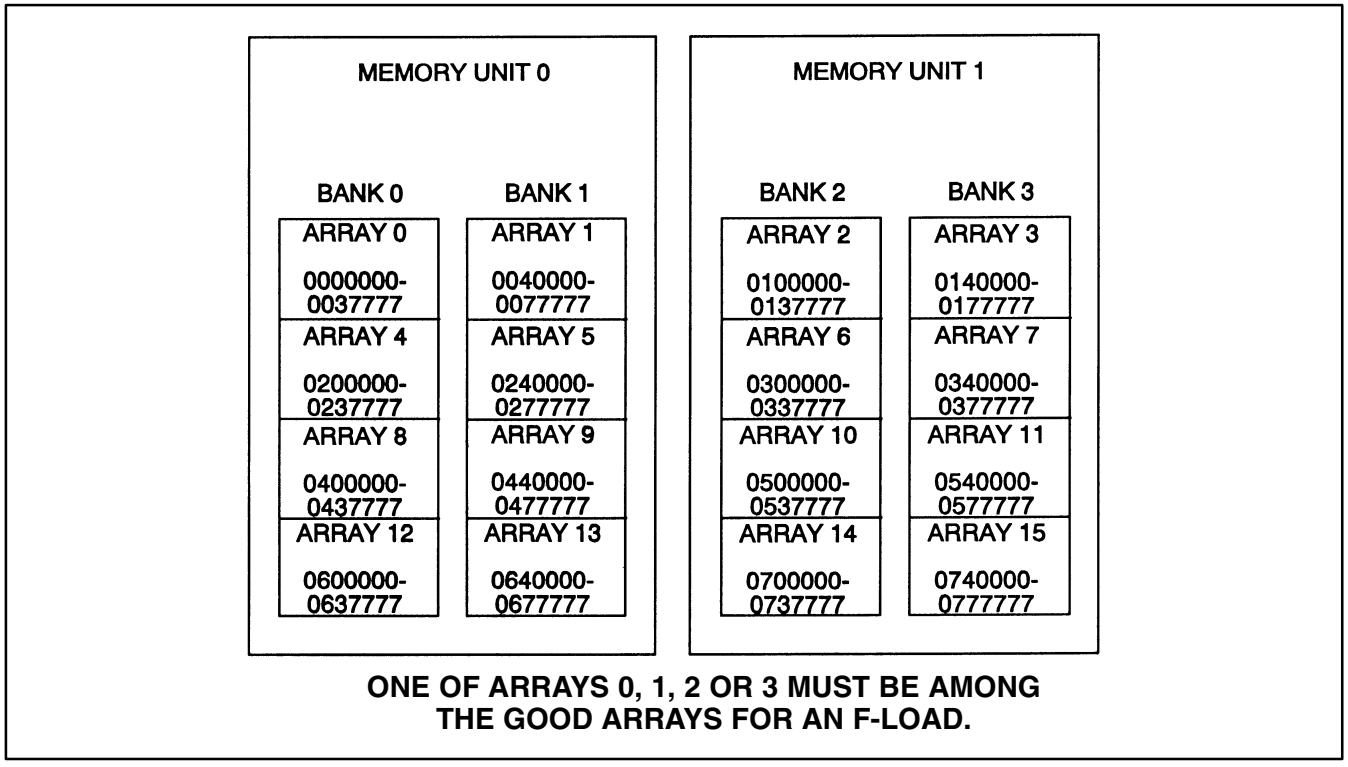

Figure 1-27. CMOS Memory Utilization

identified in the PROGRAM STATUS Tableau (see Chapter 10, Tableaus).

If a memory array is disabled in the SYSTEM STATUS Tableau, it cannot be reinitialized through system status options. If the operator suspects the failure is only temporary, reinitialization may be accomplished by execution of a full system reload through the COMPUTER RESTART switch.

1.3.6 Program Degradation. Program degradation can result from any number of failures, and the results may be seen as very subtle problems or catastrophic program loss. Often a high number of software malfunctions may be an indication of software degradation. Software malfunctions are reported via the following:

ILLEGAL INSTR	XXXX
INSTR LIMIT	XXXX
OPERAND LIMIT	XXXX
TIMEOUT	XXXX
OPERAND READ	XXXX
OPERAND WRITE	XXXX

Note

The operator should record and report software malfunction data to the TC custodian.

These alerts refer to a specific task or instruction within the GPDC memory which failed to be correctly executed. When software degradation does occur, the operator has three basic choices:

1. Continue with the problem.
2. Reinitialize the system.
3. Reload the program.

By continuing, the problem may correct itself, but often will lead to further degradation. A REINIT SYSTEM will often correct the problem if the problem is associated with malfunctioning hardware. Reloading the program should be considered as a last alternative. The impact will be lost time and possible loss of tactical data. However, reloading the program will generally correct any improper program instruction that may be causing program degradation. (See Figure 1-28 for common program faults and results.)

FAULT	RESULT
IOC 0/1	Loss of COTAC MPD Loss of data-link (CC disabled) Loss of data extraction (DMTU write disabled) Loss of associated HACLCS station (on-line) System slowdown
CP 0/1	System slowdown
CP 0 & 1	No program load

Figure 1-28. Program Faults and Results

1.3.7 Program/Avionics Shutdown

1. END MSN option — select valid.

Note

Operator should wait until scopes go blank before securing power control panel switches.

2. The following switches should be positioned as indicated:
   a. COMPUTER GROUP — OFF.
   b. ESM — OFF.
   c. Display generator power — OFF.
   d. Displays — OFF.
3. Station off-line controls — OFF.
4. Transportable cartridge — Remove.

CAUTION

Use of excessive force on the TC release lever to release a TC from the DMTU could cause the TC locking pin to jam in the TC locking notch located at the bottom rear of the cartridge. An attempt to pull the TC from the DMTU after this occurs will result in the back of the TC being separated from the unit. If normal force does not move the TC release lever to the release position, the DMTU with the TC installed must be removed from the aircraft and turned into maintenance for repair.

1.3.8 Power Transients. Power transients can be expected during the transition from external to aircraft power and when placing another generator on-line after APU or single-engine avionics startup. GPDC SCM contains circuits that provide data retention voltages and data protection during power transients. When a power transient occurs, necessary voltage will be maintained for at least 50 milliseconds. When power transients can be anticipated, the following procedures should be utilized:

1. Displays — OFF.
2. Power transients — EXECUTE.
3. Displays — ON.
4. SYSTEM STATUS Tableau — Reinitialize all defective/disabled subsystems.

1.3.9 Data Extraction and Safe Data. The DEP obtains mission data and equipment status and stores the data on tracks 2 and 4 of the TC. The information is later used to reconstruct the mission, train operators, and record aircraft maintenance data.

Note

END MISSION is required for proper data extraction/mission replay.

Three categories of data are extracted by DEP:

1. Prespecified events — Events, such as IFPM status reports, on-tops, FTPs (entry, capture, and removal), subsystem activation and deactivation, contacts (radar and FLIR), fixes, as well as sonobuoy and weapon deployments, are recorded along with their specific parameters.
2. Periodic events — Aircraft flightpath data and ESM data are extracted at regular intervals.
3. Operator requested events — The contents of a displayed tableau are extracted by pressing TABLE EXTRCT display control switch at the COTAC, TACCO, or SENSO station.

When an extractable event occurs, the data extraction subprogram is notified, notes the event parameters, and stores them in a 250-word data extraction buffer of the GPDC main memory. When the buffer is filled, the data are transferred onto a designated track of the TC. When a track is filled, the data extraction subprogram requests the DMTU to reposition the read/write heads on the next track.

The process repeats itself until both tracks devoted to data extraction are filled, at which time the following alert is displayed:

ZZZZ END DATA EXTR

In addition to these data extracted by DEP onto the TC, a component of the executive subprogram extracts safe data onto track 6 once every 2 minutes. These data are used to continue a mission following an OPERATIONAL CONT reload. Safe data include:

1. Navigation parameters
2. Communications configuration
3. Kill stores inventory
4. Track number block
5. Contact number block
6. Deployed sonobuoy positions
7. Contacts
8. Fixes
9. Tracks
10. Special points
11. On top
12. Special threats
13. Current ESM scan bands
14. Display status of all symbology.

Safe data are available during an operational continue reload, via the INSERT SAFE DATA cue, or can be loaded at any time by use of the INSERT DATA function (PROGRAM CONTROL matrix).

1.3.10 In-Flight Performance Monitoring. The IFPM subprogram monitors avionics equipment status and receives equipment malfunction reports from the individual subsystem subprograms such as FLIR

and radar. Malfunctions also are detected from periodic test programs such as the GPDC self-test program.

The EAR generates the alerts and tableau modifications that correspond to the subsystem failure. The EAR processes three basic categories of subsystem failures.

1. Data transfer failures
2. Hardware failures
3. Hardware failures disappearing.

Data transfer failures include data transfer self-test errors, illegal responses, and power supply voltage tolerances. Transmissions are retried three times and, if the failure continues after three successive attempts, the failures are defined as hardware failures. All other failures are immediately defined as hardware failures. Hardware failures detected by IFPM cause the EAR to display the following alert:

ZZZZ XXXXXXXXX DEF

ZZZZ represents time, and the Xs represent the defective subsystem. Additionally, the appropriate subsystem defect and disable columns of the SYSTEM STATUS Tableau will be updated to reflect the status of the subsystem.

Hardware failures disappearing are failures that had previously been reported, but subsequently the failure has disappeared and the subsystem is operational again. The EAR then displays the alert:

RNZ XXXXXXXXX

where the Xs represent the subsystem listed in the SYSTEM STATUS Tableau.

The alert indicates a defect has disappeared in the equipment and may be reinitialized through the system status options of the PRGM CONT matrix.

1.3.11 Hook Table and Display Buffer. The MPDs and the pilot display may be overloaded if either the hook table or the display buffer for that specific display overflows. The hook table contains all TAC PLOT symbology in GPDC memory that might be displayed at any point on the surface of the Earth. Symbols are in the hook table, independent of range scale selected or display center point. Clearing a symbol using CLR PT data does not always remove it from the hook table. The display buffer contains all TAC PLOT symbology which is currently being displayed at a specific station. Symbols in the display buffer are dependent on display scale and display center coordinates. Items cleared from the display are also cleared from the display buffer.

One symbol in the hook table requires one word of memory space. However, the display buffer usually requires more than one word of memory for one symbol.

The sizes (number of words) of the hook table and display buffer memories for the pilot are 50 words for the hook table and 200 words for the display buffer. COTAC, TACCO, and SENSO each have 100 and 300 words, respectively.

Typical display buffer memory requirements for displayed items are shown in Figure 1-29, with the number of words required for each item.

An overflow of either the hook table or display buffer is indicated to the operator by one of the following alerts:

DSPL BUFFER EXCD

1. The operator display buffer has overflowed.

DSPL TABLE EXCD

2. The operator hook table has overflowed.

DSPL TABLE LIM

3. The operator hook table has been filled to the point where there is capacity for only two more items. At the pilot station, this capacity for two more items does not include the capacity reserved for the two highest priority FTPs. The alert is displayed when the 98th item is entered at the COTAC, TACCO, or SENSO station and when the 46th item is entered at the pilot station.

Sonobuoy	4
FTP (Undesignated)	4
FTP (Designated)	6
On Top	2
Basic Contact	4
Remote Contact (No bearing)	4
Remote Contact (Bearing)	12
PU	10
Fix	9
Track	10
Lat/Long	7
Range Radius Circle	6

Figure 1-29. Typical Display Buffer Memory Requirements

1.4 CUES

Cues are GPDC messages displayed on MPDs that give directions to the COTAC, TACCO, and SENSO operators when they are processing a function. Cues are not displayed at the pilot station. The type of cue determines whether the action directed is optional or mandatory.

There are four types of cues:

1. Data entry
2. Decision
3. Function activation
4. Loader.

Data entry and decision cues are classified as optional or mandatory. Function activation and loader cues are always mandatory.

Optional cues have OPTNL displayed in the lower right corner of the cue area, informing the operator that the cue may be disregarded. If the operator decides not to respond to an optional cue, the SKIP CUE switch is pressed, informing the GPDC to use preprogrammed data that allows function processing to continue. To terminate an optional cueing sequence of a function, the TERM CUE SEQ (terminate cue sequence) switch is pressed.

Mandatory cues request inputs that the GPDC requires to complete the function being processed. When a mandatory cue is ignored, function processing is terminated.

Some optional cues can be mandatory under certain circumstances. This is because some cues are activated by more than one portion of the operational program. While these cues are normally displayed as optional they become mandatory to certain users. In this case, the OPTNL is not displayed.

The correct method of responding to each type and classification of cue is detailed in the following paragraphs. Whenever practical in this manual, a cue is followed by the instruction: Respond to the cue and press ENTER (or HOOK VERIFY).

Each cue and the purpose of that cue, with applicable selection ranges, is described in Chapter 8.

1.4.1 Data Entry Cues. Data entry cues are displayed when a numeric input such as latitude, longitude, direction in degrees, speed, or distance is required.

For example, the program displays the mandatory cue:

ENT LATITUDE
N 34 12.320

This cue instructs the operator to type in the latitude for the navigation function being processed or to use the suggested entry displayed.

A suggested entry may be displayed on a mandatory data entry cue directly below the cue verification line. The suggested entry is existing data that are displayed in anticipation of the operator response to the cue. To accept the suggested entry, the operator presses the ENTER switch; these data are entered into the GPDC and the cue is removed from the cue display area. If the operator wishes to modify a part of the suggested entry and accept the remainder, REPEAT switch may be pressed for each acceptable character space and the appropriate keyset switch pressed for each character space to be modified. When the completed cue is in the cue verification area, the ENTER switch is pressed to enter these data into the GPDC.

When there is no suggested entry, the operator types in the appropriate entry which then appears on the cue

verification line. The operator visually checks the entry, then presses the ENTER switch; these data are entered into the GPDC and the cue is removed from the cue display. Optional data entry cues have OPTNL displayed in the lower right corner of the cue area. For example, the program displays the optional cue:

```
ENT STA ELEV-FT

----        OPTNL
```

The cue that appears during the TACAN GEO CORR function instructs the operator to enter the tacan station elevation in feet. The operator can type in appropriate numbers (0 to 9999) that appear from right to left replacing the blanks in the cue verification area. The operator visually checks the entry and presses the ENTER switch to enter these data into the GPDC and remove the cue from the display. If the operator chooses to skip the cue, the GPDC sets the tacan station elevation to 0 feet and allows processing to continue.

1.4.2 Decision Cues. Decision cues are displayed when the program requires the operator to select one of several specific responses.

For example, the following mandatory cue instructs the operator to select arming for both bombs and cluster bombs:

```
  X  SEL ARMING
1  NOSE
2  TAIL
3  BOTH
```

The operator types in the number representing the decision. The decision is checked by observing the entry in the cue verification area (X) located in the upper left-hand corner of the cue area. The ENTER switch is then pressed to enter the decision into the program and remove the cue from the display.

An optional decision cue has OPTNL displayed in the lower right corner of the cue area, informing the operator that the request can be bypassed by pressing the SKIP CUE switch. For example, the following optional cue allows the operator to select the country of origin for a contact:

```
SEL COUNTRY
1  GE      6  CN
2  RU      7  NE
3  US      8  IT
4  UK      9  JA
5  FR      0  SW    OPTNL
```

The operator types in the number representing the decision. The decision is checked by observing the entry in the cue verification area, located in the upper left corner of the cue area. The ENTER switch is then pressed to enter the decision into the program and remove the cue from the display.

When SKIP CUE is pressed, the program continues processing the function using preprogrammed data. In the preceding example, the country of origin is automatically designated as unknown.

1.4.3 Function Activation Cues. Function activation cues are displayed when an additional specific function is required to complete processing of an active function. All function activation cues are mandatory instructions.

Function activation cues instruct the operator to enter data into the program, or to activate, designate, or position symbology on the display. When data are entered into the program, the ENTER switch is pressed to complete the function and remove the cue from the display.

When function activation cues instruct the operator to hook symbology or points of interest on the display, the HOOK VERIFY and ENTER switches are pressed to complete the function and remove the cue from the display.

1.4.4 Loader Cues. Loader cues are displayed during program loading and initialization. Loader cues allow the operator to instruct the program to select a particular program and also to enter information unique to a given mission.

1.5 ALERTS

Alerts are one-line messages displayed by the program to inform the operator of specific conditions or malfunctions in the avionics system.

There are seven types of alerts:

1. Executive program
2. System
3. Keyset
4. Function
5. Loader
6. Advisory
7. Recovery.

Alerts are displayed at all crew stations. The alert display area consists of three lines on the COTAC MPD. The pilot display and TACCO/SENSO MPD alert display areas consist of six lines with alternate blank lines. The alert lines are 18 characters long and are always displayed in the same relationship to each other.

Alert descriptions with the meaning of the alert and impact on the operation or action, if any, to be taken by the operator is contained in Chapter 9.

1.5.1 Executive Program Alerts. Executive program alerts are actually display annotations rather than true alerts. They appear on the MPD display area immediately to the right of the cue area. The annotations inform all operators (except the pilot) that a portion of the executive program processing tables are overloaded. An overload occurs when high activity causes an excessive amount of functions to be queued (waiting to be executed) in the executive program. When the executive program scheduler queue, allocation queue, input/output queue, or the save registers table become excessive, the following annotations are displayed:

XSYS (X is flashing)
YYYY
LOAD

YYYY = MED (medium scheduler queue overload)
HIGH (heavy scheduler queue overload)
ALOC (allocation queue overload)
IO (input/output queue overload)
SAVR (save registers table overload)

If the high demand of activity continues, a system overload may occur which causes the system to automatically reinitialize. A sharp reduction in activity by the operators is required to allow the executive program time to eliminate the backlog of functions awaiting execution. Preferably, a momentary stop of activity is recommended. The annotation on the display is erased when the overload no longer exists.

Note

Deactivating subprogram functions to decrease the executive program load when an executive program alert is displayed may have an adverse effect. Deactivating functions may increase the executive program load, compounding the condition that initially caused the alert to be displayed.

1.5.2 System Alerts. System alerts inform the crew a system failure has occurred or a critical condition exists which may require degraded mode operation. System alerts also display a subsystem status that is pertinent to a related function. The program can store up to 10 system alerts in memory, including the one displayed (the latest system alert). The first four characters of a system alert is the Zulu time that the alert was generated and is represented in this manual by ZZZZ preceding the alert. System alerts remain in view until cleared by pressing the CLEAR ALERT switch or until removed from the display by more recent alerts. A new alert in excess of the memory limit of 10 causes the oldest alert in memory to be aged out.

1.5.3 Keyset Alerts. Keyset alerts are not stored in memory. Keyset alerts inform the operator that a condition exists that prevents normal processing of a selected function. Keyset alerts indicate that a function prerequisite has not been completed, is incorrect, or that a particular limit has been reached or exceeded. Only the station requesting the function displays the associated keyset alert. Only one keyset alert appears at a station and is independent of keyset alerts at other stations. Each keyset alert is cleared by pressing any INCOS switch at that station.

In INCOS tray function processing, the following keyset alerts appear frequently:

1. INVALID ENTRY
2. NO HOOK VERIFY
3. REPOSITION HOOK
4. CAPACITY LIMIT

5. CAPACITY EXCD (capacity exceeded)

6. NOT AVAIL (not available).

1.5.3.1 INVALID ENTRY. Alerts the operator that an incorrect or incomplete data entry was made. The GPDC does not know if a data entry is correct. For example, the computer accepts a target bearing of less than 359° as valid data regardless of the actual bearing. If the operator enters a bearing greater than 359°, the computer determines that the entry is invalid. Other invalid entry examples are a latitude greater than 90°, or a longitude greater than 180°. When an invalid entry has been made, the program usually reverts to one step before the error was made. For example: if the operator is processing a contact designation and selects an incorrect designation, the program ignores the entry, displays the INVALID ENTRY alert and retains the contact designation cue for the operator to answer.

1.5.3.2 NO HOOK VERIFY. Alerts the operator that a position or symbol must be hooked to enable the processing of a task, and he has failed to do so. For example, the operator depresses CLEAR POINT DATA but has not hooked the point to be cleared. The program, not knowing what point to clear, alerts the operator with the NO HOOK VERIFY alert.

1.5.3.3 REPOSITION HOOK. Alerts the operator that an improper symbol or position was hooked to complete the processing of a task. The operator repositions the hook carefully, presses HOOK VERIFY, and proceeds with the function.

1.5.3.4 CAPACITY LIMIT. Alerts the operator that the system storage capacity is reached for a particular type symbol or function. As the operator attempts to enter additional data of the same type, the program exits the function and the operator must destroy some previously entered data of the same type and then reenter the desired data, or retain all the currently stored data and not enter the new data.

1.5.3.5 CAPACITY EXCD (Capacity Exceeded). Alerts the operator that the system storage capacity is filled and that no room is available for the entry just attempted. The program ignores the input and displays the alert until it is cleared by the operator.

1.5.3.6 NOT AVAIL (Not Available). Alerts the operator that he has attempted to activate a function for which the prerequisites have not been met. For example, the operator attempts to display a range circle while the display is in the FLIR mode. Range circles are not possible in this display configuration; therefore, the NOT AVAIL alert is displayed. The most common reason for the NOT AVAIL alert is that the operator display is not in a display mode compatible with the requested function.

1.5.4 Function Alerts. Function alerts inform the operator of a subsystem status, notify the operator of a condition that inhibits completion of a task, and direct the operator to activate a function that allows processing to continue at another station.

Function alerts appear at any station operating in the mode affected by the alert. One function alert can be displayed at each station. They are removed by any of the following:

1. By accomplishing the required function

2. Automatically by the subprogram

3. By aging out if more than six function alerts for that station are backlogged in memory.

Aging out is the automatic removal of the oldest alert to allow display of a new alert when the display capacity is exceeded. As new alerts are cleared from the display, the alerts held in memory move up into view.

In all weapon and search stores procedures, a functional alert directing a required action cannot be aged out of view and backlogged into memory by another alert in sequence within the function. For example, the alert TURN ON MSTR ARM remains on the display until the function is deactivated or the MSTR ARM switch, located on the pilot left console, is placed in the ON position.

1.5.5 Loader Alerts. Loader alerts are displayed during a GPDC loader routine. They appear in the lower left area of the MPD, informing the operator of key information concerning the status of equipment during the loader routines (INCOS, DMTU, GPDC).

1.5.6 Advisory Alerts. Advisory alerts are a series of advisories that appear in the left center area of the MPD when the loader routine is active. They inform the operator of the current loader routine status.

1.5.7 Recovery Alerts. When SEL/OP loader routine is executing a DMTU recovery procedure, the alert RECOVERY IN PROGRESS is displayed (flashing) in the lower left area of the MPD.

1.6 DISPLAY SYMBOLOGY

In conjunction with the TMP display generators, the DISPAC subprogram constructs symbols for display at each crew station. Many symbols are illustrated with letters such as XXX or CCC on the right side. The letters themselves are not actually displayed but represent positions where data (for example, time and track number) may be displayed. DISPAC symbology includes the following:

1.6.1 Hook. The hook symbol position is controlled by the operator through trackball movements. The operator uses the hook as a pointer for designating positions or symbols on the display.

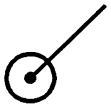

1.6.2 Aircraft. The aircraft symbol represents the aircraft current position and moves over the display area with direction and speed proportional to the aircraft ground track. A 1/2-inch vector extends from the symbol center and represents the current direction of the aircraft ground track.

1.6.3 Sonobuoy. The sonobuoy symbol marks a sonobuoy position on the tactical plot display. The sonobuoy symbol has several associated letters and numbers that describe:

1. Sonobuoy type (X) where X can be:

   D — DIFAR
   K — REMOTE
   L — LOFAR
   S — DICASS
   V — VLAD

2. RF channel (AA) where AA can be 01 through 99.

3. Processor tuning status (B) where B can be:

   (blank) — not tuned
   K — REMOTE

4. If the TN AMPLFY function is active, CCCC represents a four-digit (octal) data-link track number.

1.6.4 Smoke. The smoke symbol marks smoke positions on the tactical plot display.

1.6.5 Sound Underwater Signal. The SUS symbol maraks the computed position when a SUS splash point occurs after the SUS is dropped from the aircraft.

1.6.6 Fly-To-Point. The FTP symbol is used to mark a geographic position toward which the operator wants the aircraft to proceed. A designated FTP has a 1/2-inch vector extending from the symbol center in the direction the operator wants the aircraft to overfly the FTP. The associated letters and numbers describe:

1. FTP type (X) where X can be:

   W — Weapon
   E — Expendable
   I — Intercept
   N — Normal
   M — Monitor

Note

Detailed information on FTPs, including ORBIT, is discussed in the steering subprogram description in Chapter 4.

2. FTP priority (YY) where YY is a one- or two-digit number representing the FTP priority. The pilot display is an exception to this rule. On the pilot display, the priority designation is absolute regardless of FTP type and sequence within the type.

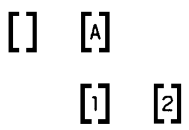

1.6.7 Reference Mark. The reference mark is used as a general purpose mark to flag points of interest on the tactical plot. If the mark is used to designate the position of the aircraft as it flies over a point, the letter "A" appears in the symbol center and it is called an "aircraft mark." The numbers 1 and 2 appear in reference marks during the CMPT INTSCT cueing sequence when an ambiguity exists.

1.6.8 Area Search Symbol. The area search symbol is used to show the location of radar returns on the TAC PLOT when utilizing the area search function.

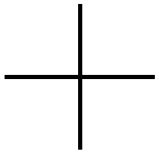

1.6.9 Classification Aids Cursor. The classification aids cursor is used under trackball control to aid in measurement of ISAR images.

1.6.10 Radar Detect Symbol. The radar detect symbol is used to show the locations of radar returns on the TAC PLOT when utilizing the target correlation function.

1.6.11 Weapon Splash Point. The weapon splash point symbol marks the calculated position where a weapon strikes the water.

1. Weapon type (X) where X can be:

   B — Bomb
   H — Harpoon
   M — Mine
   T — Torpedo

2. Estimated time of splash (CCCC) is only displayed when the INCOS AMPLFY function is active.

3. If the TN AMPLFY function is active, CCCC represents a four-digit (octal) data-link track number.

EX

1.6.12 Enable Point. The enable point symbol consists of the following:

1. The character E designating the position where the Harpoon missile seeker will initiate a search pattern (used in BOL mode).

2. The character X indicating the associated wing station, 5 or 6.

DX

1.6.13 Destruct Point. The destruct point symbol consists of the following:

1. The character D designating the position where the Harpoon missile seeker will terminate its search pattern and self-destruct, used in BOL mode.

2. The character X indicating the associated wing station, 5 or 6.

WX

1.6.14 Harpoon Waypoint. The Harpoon waypoint symbol consists of the following:

1. The character W designating the position where the missile will alter its direction toward the Harpoon aim point (RBL mode), or the enable point selected (BOL mode).

2. A one-character digit indicating the associated wing station, 5 or 6.

1.6.15 Harpoon Aim Point. The Harpoon aim point symbol consists of the following:

1. The character designating the Harpoon missile aim point in the range RBL mode.

2. A four-character octal link track number — XXXX.

3. A one-character digit indicating the associated wing station, 5 or 6.

4. When the Harpoon aim point is assigned to a system track, a 1/2-inch vector is drawn from the center of the aim point in the direction of the designated track.

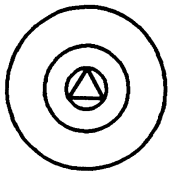

1.6.16 Harpoon Waypoint Envelope — RBL Mode. The Harpoon waypoint envelope symbol consists of two concentric circles centered about the Harpoon aim point. It is used to designate an area within which the operator may select a valid Harpoon waypoint.

W W

1.6.17 Harpoon Waypoint Envelope — BOL Mode. The Harpoon waypoint envelope symbol consists of W located on each end of a bearing line. The Ws indicate the two points between which an operator may select a valid Harpoon waypoint.

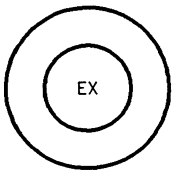

1.6.18 Harpoon Destruct Point Envelope. The Harpoon destruct point envelope consists of two concentric circles centered about the Harpoon enable point.

EX DX

1.6.19 Harpoon Release Envelope — BOL Mode with No Waypoint Selected. The Harpoon release envelope for the BOL mode with no waypoint selected consists of one vector along the bearing line determined by the Harpoon enable and destruct points.

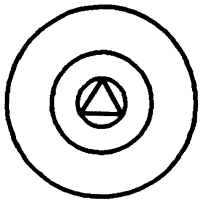

1.6.20 Harpoon Release Envelope — RBL Mode with No Waypoint Selected. The Harpoon release envelope for the RBL mode with no waypoint selected consists of two concentric circles centered about the Harpoon aim point.

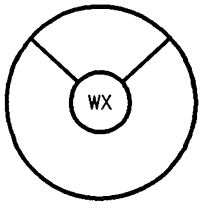

1.6.21 Harpoon Release Envelope — Waypoint Selected. The Harpoon release enve-

lope for BOL or RBL with a waypoint selected consists of the following:

1. Two concentric circles centered about the Harpoon waypoint.

2. Two vectors that form a 90° angle such that their bisection intersects with the entered Harpoon aim point or Harpoon bearing line.

3. Waypoint envelope always points toward aim point or enable point (not displayed).

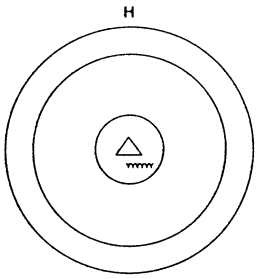

1.6.22 Harpoon DTOT Display Symbology. This consists of a circle centered on either a waypoint, aim-point release envelope, or enable point with a radius decreasing at:

1. The rate of current aircraft groundspeed when the circle is outside the maximum release range.

2. The rate of the missile airspeed when the circle is at or inside the maximum release range. A six-digit DTOT time is display adjacent to the designated aim point or enable point.

Note

DTOT circle is an approximation of accurate timing calculations displayed in the Harpoon Missile Tableau.

OT

1.6.23 On Top. The on-top position symbol is used to mark the position directly below the aircraft when the ON TOP switch is pressed. The O represents the precise position location. Only one on-top position symbol can be displayed at a time.

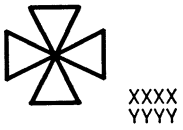

1.6.24 Datum (Local or Remote). The datum symbol marks a locally entered or a data-link received contact position on the tactical plot. The associated numbers describe:

1. Track number (XXXX) where XXXX ranges from 0200 through 7776 (octal).

2. Designation time (YYYY) where YYYY ranges from 0000 through 2359 (visible in amplify).

3. If TN AMPLFY function is active, YYYY represents a four-digit (octal) data-link track number.

4. If the datum symbol has a superimposed K, the contact is data-link received.

Note

Track numbers and contact numbers are designated in the octal number system.

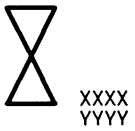

1.6.25 Lost Contact. The lost contact symbol is used to mark the last known position of the lost contact. The associated numbers describe:

1. Track number (XXXX) where XXXX ranges from 0200 through 7776 (octal), is displayed if lost contact is locally entered. Track number is blank if the symbol is remote.

2. If TN AMPLFY function is active, YYYY represents a four-digit (octal) data-link track number.

3. If INCOS AMPLFY function is active, YYYY represents a three-digit (YYY) speed of track.

4. A superimposed letter on the symbol indicates the source designator, where:

   BLANK — Dissimilar Sources
   E — ESM
   F — FLIR
   K — Remote
   R — Radar
   T — TACCO Designate
   V — Visual

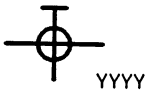

1.6.26 Downed Aircraft (Local or Remote). The downed aircraft symbol is used to mark the position of an aircraft crash. It flashes continuously. The associated numbers describe:

1. Designation time (YYYY) where YYYY ranges from 0000 through 2359 (visible in amplify).

2. If TN AMPLFY function is active, YYYY represents a four-digit (octal) data-link track number.

1.6.27 Distressed Vessel (Local or Remote). The distressed vessel symbol marks the position of a vessel with an emergency. It flashes continuously. The associated numbers describe:

1. Designation time (YYYY) where YYYY ranges from 0000 through 2359 (visible in amplify).

2. If TN AMPLFY function is active, YYYY represents a four-digit (octal) data-link track number.

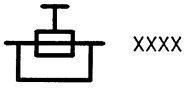

1.6.28 CV. The CV symbol is an operator-selected symbol that designates the position of the carrier. The numbers (XXXX) indicate the time of the symbol's last computed update.

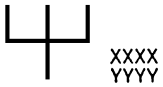

1.6.29 Nonsub (Local or Remote). The nonsub symbol marks the position of a contact which has been evaluated as nonsubmarine. The associated numbers indicate:

1. Track number (XXXX) where XXXX ranges from 0200 through 7776 (octal).

2. Determination time (YYYY) where YYYY ranges from 0000 through 2359 (visible in amplify).

3. If TN AMPLFY function is active, YYYY represents a four-digit (octal) data-link track number.

4. If the nonsub symbol has a superimposed K, the contact is data-link received.

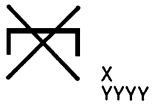

1.6.30 Remote Weapon Splash Point. Remote weapon splash point marks the calculated position of a data-link received weapon splash point.

1. Splash point type (X) where X equals:

   B – Bomb or Torpedo

2. If TN AMPLFY function is active, YYYY represents a four-digit (octal) data-link track number.

1.6.31 Man-in-Water (Local or Remote) or PU Emergency Bailout. Man-in-water symbol marks the position of a man in the water or the position at which an emergency bailout from a PU occurred.

1. PU number (XXXX) is displayed when the symbol is designated as an emergency bailout.

2. Time of entry (YYYY) where YYYY ranges from 0000 through 2359 (visible in amplify).

3. If TN AMPLFY function is active, YYYY represents a four-digit (octal) data-link track number.

1.6.32 Return to Base (PU Emergency). The return to base symbol marks the position where a local or remote PU made the determination to make an emergency return to base.

1. XXXX represents PU number.
2. Time of entry (YYYY) where YYYY ranges from 0000 through 2359 (visible in amplify).
3. If TN AMPLFY is active, YYYY represents a four-digit (octal) data-link track number.

1.6.33 Basic Contact. The basic contact symbol is used to mark a contact gained by a sensor on the aircraft or transmitted to the aircraft over data-link. The symbol consists of a letter representing the sensor that gained contact or the source of the contact. The letter E can be:

R — Radar
E — ESM
K — Remote (data-link)
T — TACCO Designate

The associated numbers indicate:

1. Contact number (XXX) where XXX ranges from 001 through 377 (octal).
2. Entry time (YYYY) where YYYY ranges from 0000 through 2359 (visible in amplify).
3. If TN AMPLFY is active, YYYY represents a four-digit (octal) data-link track number.

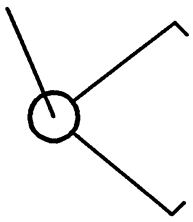

1.6.34 ESM Bearing Sector Inhibit. The ESM bearing sector inhibit symbol is used to indicate a sector relative to true North that has been inhibited from displaying detected emitters.

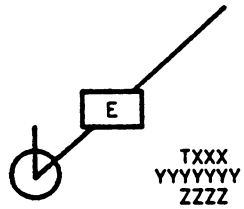

1.6.35 ESM Contact. The ESM contact symbol indicates an ESM bearing on the TAC PLOT. The symbol consists of a bearing line from the aircraft position at the time of contact to the plot edge in the direction of the contact. A basic contact symbol is displayed 1 inch from the bearing origin. See NAVAIR 01-S3AAB-1A for explanation of characters X, Y, and Z.

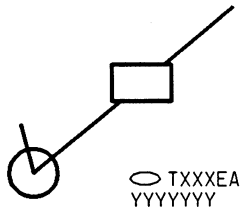

1.6.36 ESM Emitter. Displays an ESM Emitter on ESM plot. See NAVAIR 01-S3AAB-1A for explanation of characters X and Y.

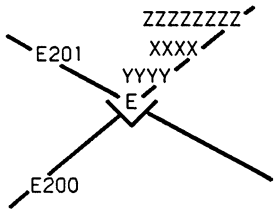

1.6.37 ESM/ESM Computed Intersection Fix. The ESM fix is generated through the use of the compute intersect function on two ESM bearing lines and consists of the following:

1. The hookable character E at the fix position surrounded by the appropriate fix symbol.
2. A four-character octal track number — XXXX.

3. (Amplify) A four-digit Zulu time of entry — YYYY, and a seven-character alphanumeric PDIP IV library name — ZZZZZZZ.

4. (Link Amplify) A four-character octal data-link track number — YYYY.

1.6.38 ESM Threat Contact. The ESM threat symbology on the pilot display indicates that an emitter has been received which may present a lethal threat to the aircraft. The ESM threat contact symbology consists of the following:

1. The character E within the hostile fix symbol.

2. A three-digit octal contact number — XXX.

3. A six-character weapon name from the ID library — YYYYYY.

4. A range circle centered around the aircraft symbol at 1.5 times the range of the most lethal emitter detected.

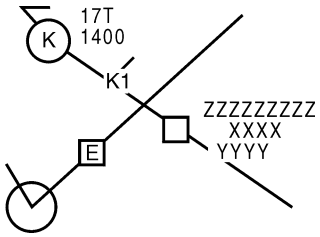

1.6.39 Computer Intersection — Fix Dissimilar Sources. A fix generated through the use of the compute intersection function on dissimilar sources consists of the following:

1. A hookable fix symbol located at the calculated intersection. There is no character inside the fix symbol.

2. A four-character octal track number — XXXX.

3. (Amplify) A four-digit Zulu time of entry — YYYY, and a 10-character alphanumeric rigging capability — ZZZZZZZZZZ.

4. (Link Amplify) A four-character octal data-link track number — YYYY.

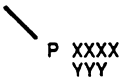

1.6.40 Continuous Predict. The continuous predict position symbol is used to mark the predicted contact position on the TAC PLOT. The symbol position moves to coincide with the computer estimated contact position. It consists of the letter P with a 1/4-inch vector extending in the direction of the predicted contact course. The associated numbers indicate:

1. Track number (XXXX) where XXXX ranges from 0200 through 7776 (octal).

2. Contact speed (YYY) where YYY ranges from 000 through 999 (visible in amplify).

3. A remote continuous predicted position symbol is identified with the letters P_k.

1.6.41 Single Predict. The single predict symbol is used to mark a computed contact position for a time designated by the operator. The symbol does not move after it is displayed. The designated time can be in the future or in the past. The symbol consists of the letter S. The associated numbers indicate:

1. Track number (XXXX) where XXXX ranges from 0200 through 7776 (octal).

2. Designated contact position time (YYYY) where YYYY ranges from 0000 through 2359 when amplified.

N ZZZZZZZZZZ
VVVV
YYYY

1.6.42 Basic Fix. The basic fix symbol is used to mark contact fixes and tracks on the TAC PLOT. The symbol consists of a classification identification symbol (see Figure 1-30) and a 1/4-inch vector indicating the fix movement direction. The associated letter and numbers indicate:

1. Sensor source designator (N) where N can be:

   E — ESM computed intersection
   F — FLIR
   K — Remote (data-link input)
   R — Radar
   T — TACCO fix designate
   V — Visual
   X — Preflight inserted data
   Blank — Computed intersection with dissimilar sources.

2. Track number (VVVV) where VVVV ranges from 0200 through 7776 (octal).

3. Fix time (YYYY) where YYYY ranges from 0000 through 2359 (visible in amplify).

4. If TN AMPLFY is active, YYYY represents a four-digit (octal) data-link track number.

5. Rigging (Zs) where up to 10 alphanumeric characters represent name, number, or type that has been entered in the RIG Tableau. Also used for name of PDIP fix items.

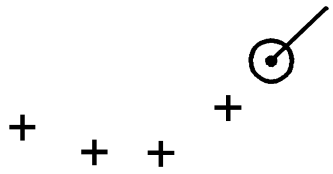

1.6.43 Aircraft Own Track History. The aircraft own track history symbol marks the aircraft path history on the TAC PLOT. It consists of up to 15 plus signs that appear at operator-selected time intervals. When

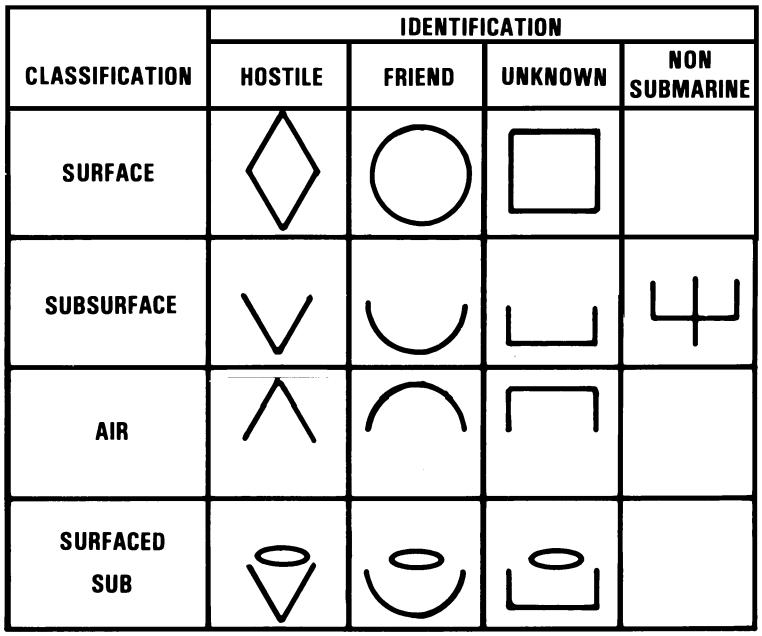

Figure 1-30. Basic Fix Symbology

15 signs are displayed, appearance of the next sign ages out the oldest sign in the track.

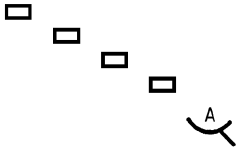

1.6.44 Fix History. The fix history symbol marks the track history of a subsurface, surface, or airborne track and all fixes associated with a track that has been removed from the display by the GEN TRK function. A maximum of 10 fix history symbols are displayed.

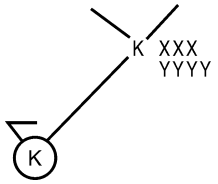

1.6.45 Sonobuoy Contact Bearing. The sonobuoy contact bearing symbol group consists of the basic sonobuoy symbol K enclosed. A bearing vector extends from the buoy symbol in the direction of the contact out to the display area edge. A 1/4-inch vector denotes the bearing change direction. The basic symbology, including contact number (XXX) and contact time (YYYY), is displayed 1 inch from the buoy symbol when amplified. If TN AMPLFY is active, YYYY represents a four digit (octal) data-link track number.

K — Remote DIFAR contact

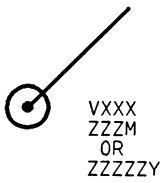

1.6.46 Vector. The vector symbol is controlled by the trackball and is used to measure a true bearing and distance on the MPD. The operator can originate the vector at the aircraft position symbol or from a hooked point. The symbol consists of a variable length vector extending from the aircraft symbol or a geographic position to the hook symbol. The letter V is displayed outside the hook symbol. The associated letters and numbers indicate:

1. Vector direction relative to true North (XXX) where XXX ranges from 000 through 359.
2. Vector length (ZZZM) if the plot scale is 32 nm or greater where ZZZ ranges from 000 through 999 (M indicates miles).
3. Vector length (ZZZZZY) if the plot scale is 16 nm or less where ZZZZZ is indicated in yards (Y indicates yards).

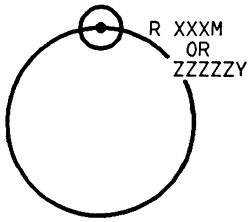

1.6.47 Range Radius Circle. The range radius circle symbol is used to construct patterns on the TAC PLOT. It consists of a circle centered on an operator designated geographic position with the circle radius controlled by moving the hook symbol. The range readout (XXXM or ZZZZZY) is preceded by the letter R. The range readout limits are the same as the vector symbol.

1. Range readout (XXXM) is miles when plot scale is 32 nm or greater.
2. Range readout (ZZZZZY) is in yards when plot scale is 16 nm or less.

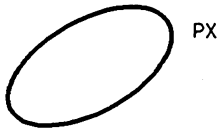

1.6.48 Probability Contour. The probability contour symbol is used to designate a geographic area within which the target will be found with an operator selected probability. The symbol consists of an ellipse representing the boundary of the probability area. The area size and shape depend on many conditions including the operator selected (desired) probability. The letter P followed by the selected probability X is presented at the northernmost point on the ellipse major (longest) axis. X ranges from 0.1 through 0.9.

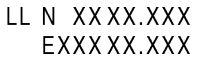

1.6.49 Latitude/Longitude. The latitude/longitude symbol displays the latitude and longitude of a point.

1. The first line contains the designator LL, a latitude readout in degrees, minutes, decimal minutes, and a leading North/South direction indicator. The first character is hookable.

2. The second line contains a longitude in degrees, minutes, decimal minutes, and a leading East/West direction indicator.

3. The third line contains a small circle which specifies the position for which the LL readout applies.

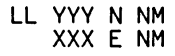

1.6.50 Latitude/Longitude (Grid Coordinate Reference). The latitude/longitude symbol displays the X and Y coordinates of a point with respect to the grid coordinate reference point.

1. The first line contains the designator LL, and a Y-grid coordinate readout in nautical miles and a North/South direction indicator. The first character is hookable.

2. The second line contains an X-grid coordinate readout in nautical miles and an east/west direction indicator.

3. The third line contains a small circle which specifies the position for which the X- and Y-grid coordinates readout applies.

1.6.51 ASW Search Center. A vector extending in the direction of ASW search center movement.

1. YYYY — A four-digit octal link track number (TN AMPLIFY).

2. YYYY — A four-digit time of entry (AMPLIFY).

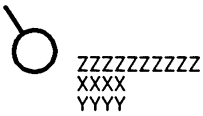

1.6.52 Participating Unit. A PU is a remote symbol at the reported coordinates indicating the appropriate category symbology: subsurface, surface, or air.

1. ZZZZZZZZZZ — A 10-character alphanumeric rigging capability (visible in amplify)

2. XXXX — A four-character octal PU address

3. YYYY DTCH = Ditching

   RTB = Return to base
   BAIL = Bailout

1.7 TACTICAL PLOT DISPLAY

Typical tactical plot display formats are shown in Figures 1-31, 1-32, and 1-33. These figures represent the same tactical situation as viewed at each station (pilot, COTAC, and TACCO/SENSO). Each display illustrates a sample of display symbology previously discussed, including cues, alerts, and the INDEX Tableau.

1.7.1 Pilot Display. The pilot display (see Figure 1-31) presents only a limited view of the tactical plot. To minimize display clutter, only those items of interest to the pilot are shown. The following are not displayed to the pilot:

1. Tableaus

2. Cues

3. Sonobuoy symbols.

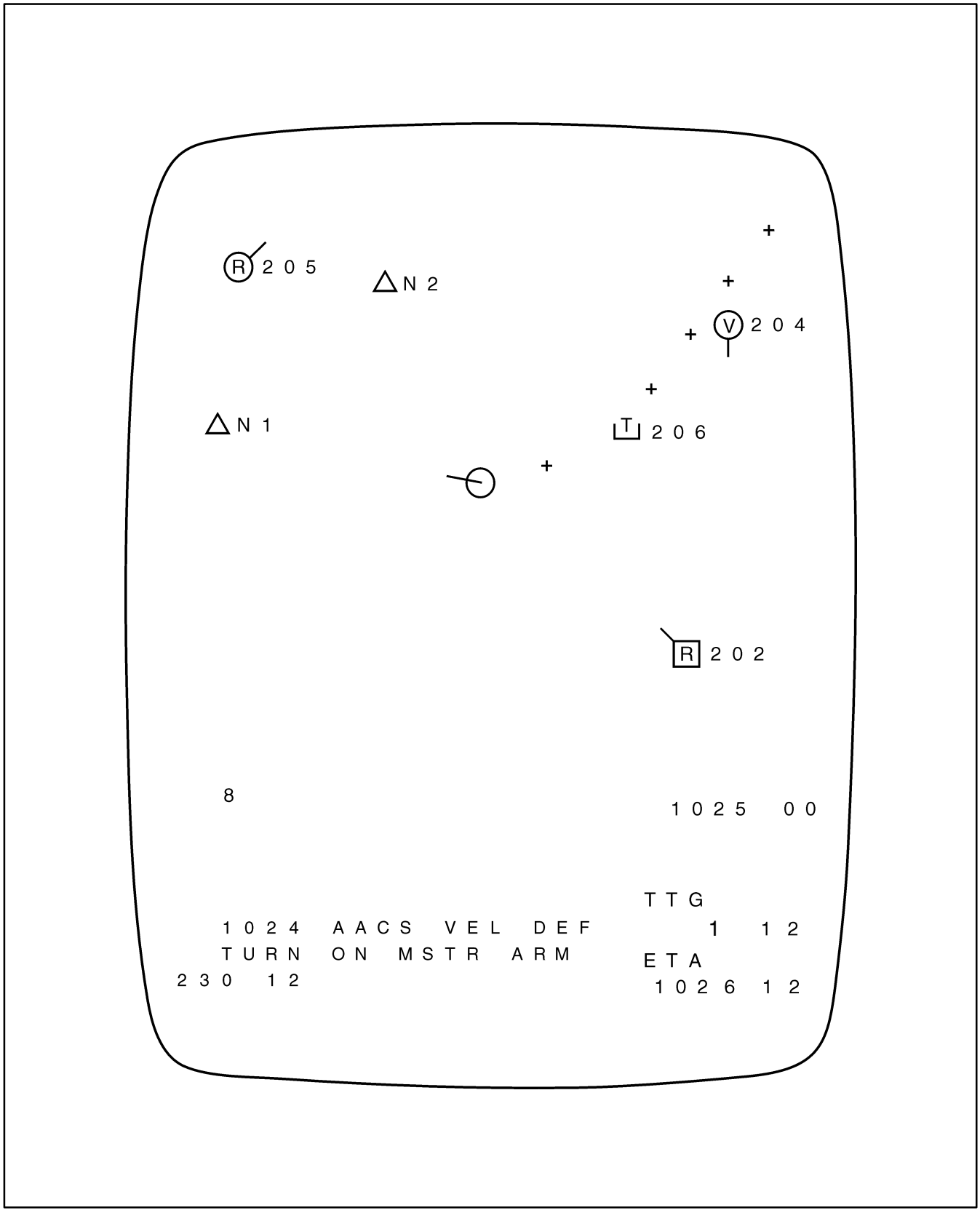

Figure 1-31. Pilot Tactical Display (Sheet 1 of 2)

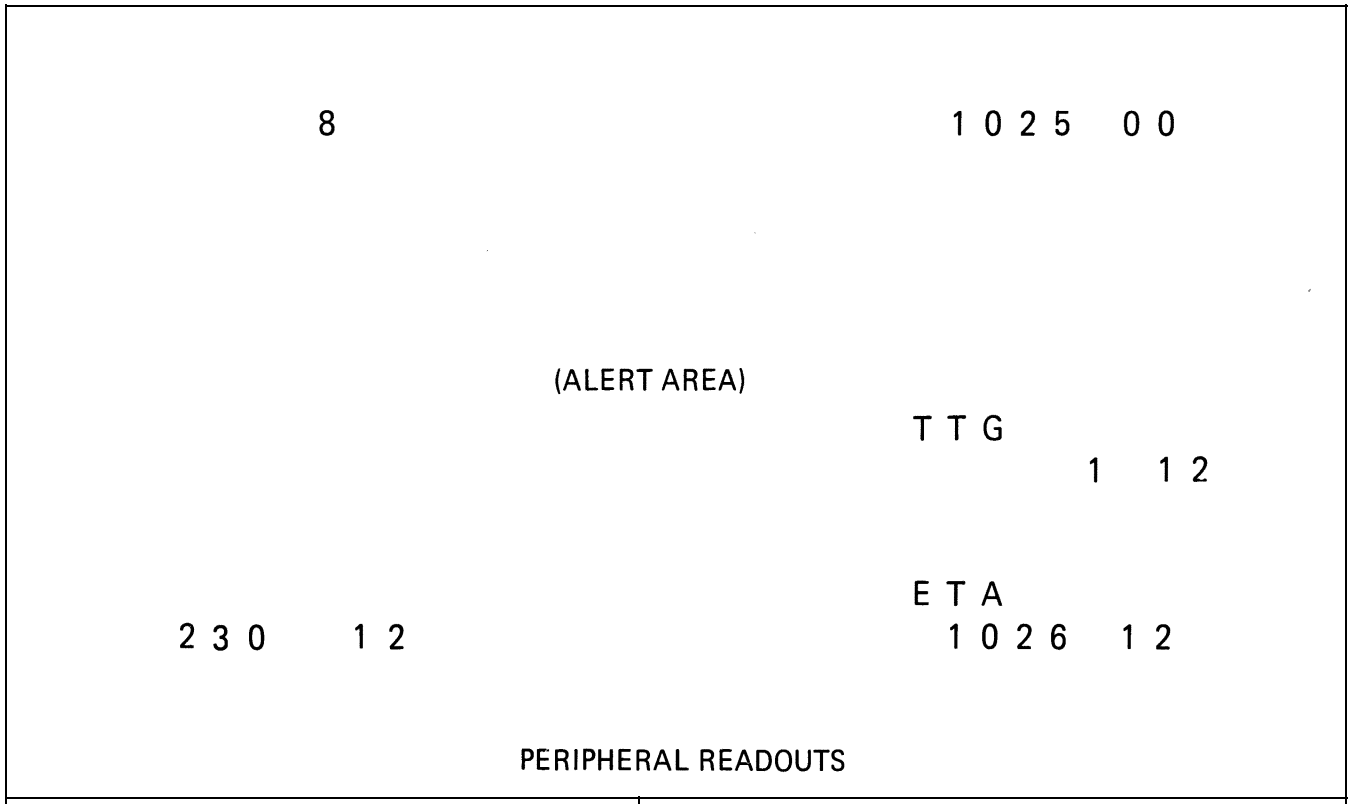

PERIPHERAL READOUTS

LEFT SIDE			RIGHT SIDE		
8	=	DISPLAY SCALE IN NAUTICAL MILES. MEASURED FROM CENTER OF TAC PLOT TO NEAREST EDGE (RANGE IS 2, 4, 8, 16, 32, 64, 128, 256, 512, OR 1024)	1025 00	=	ZULU TIME (RANGE IS 0000 00 THRU 2359 59)
			TCG	=	TIME TO GO TO FTP (APPEARS ONLY WHEN FTP IS ENTERED)
230 12	=	WIND DIRECTION IN DEGREES (RANGE IS 000 THRU 359) AND WIND SPEED IN KNOTS (RANGE IS 0 THRU 999)	1 12	=	MINUTES AND SECONDS FOR TTG (RANGE IS 00 00 THRU 59 59)
			ETA	=	ESTIMATED TIME OF ARRIVAL TO FTP
			1026 12	=	ZULU TIME FOR ETA (RANGE IS 0000 00 THRU 2359 59)

Figure 1-31. Pilot Tactical Display (Sheet 2)

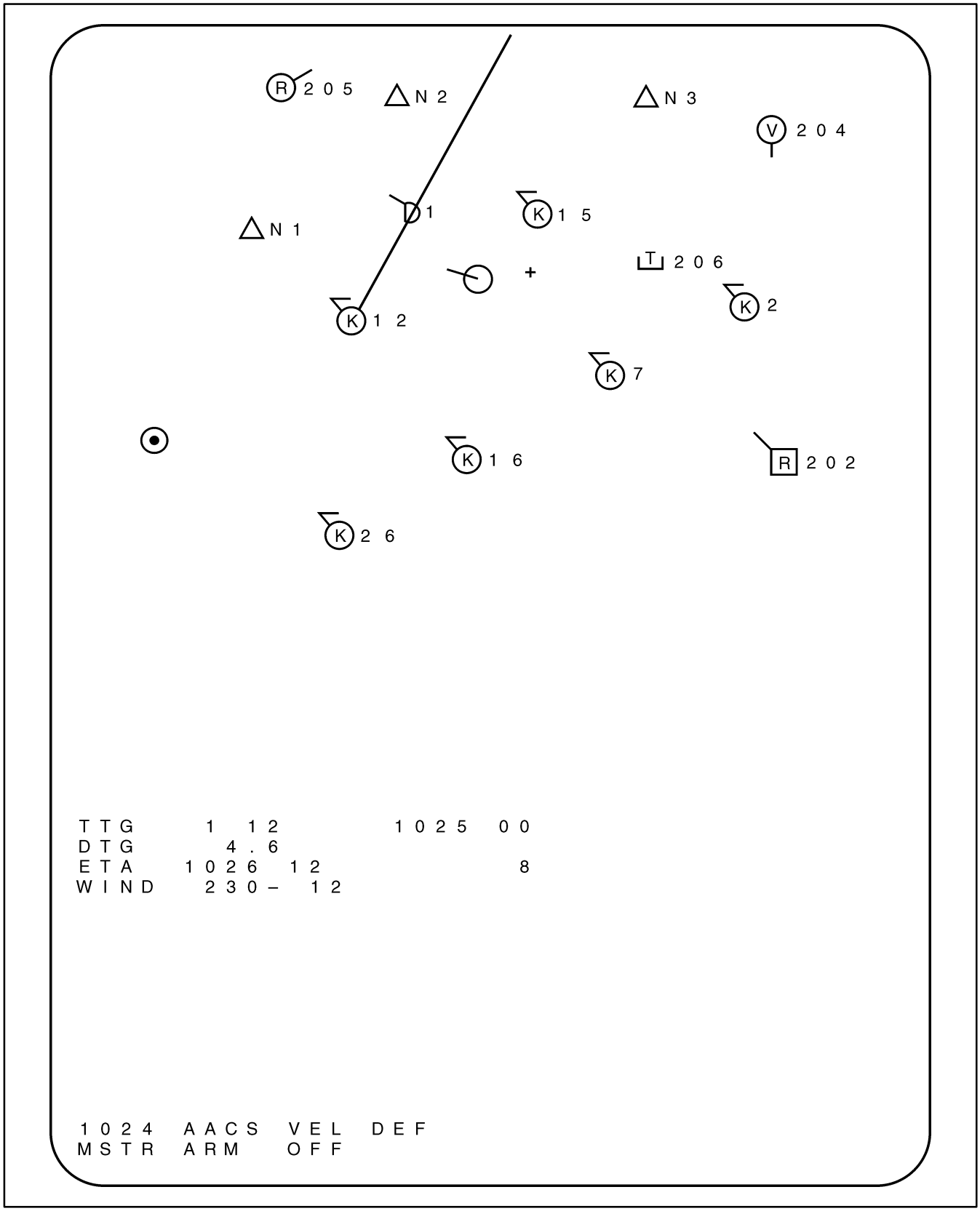

Figure 1-32. COTAC Tactical Display (Sheet 1 of 2)

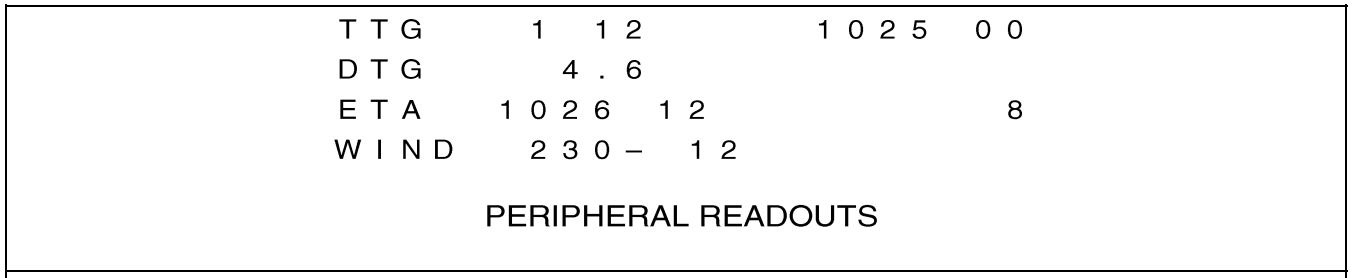

PERIPHERAL READOUTS

TTG	=	TIME TO GO TO FTP (APPEARS ONLY WHEN FTP IS ENTERED)
1 12	=	MINUTES AND SECONDS FOR TTG (RANGE IS 00 00 THRU 59 59)
1025 00	=	ZULU TIME (RANGE IS 0000 00 THRU 2359 59)
DTG	=	DISTANCE TO GO TO FTP (APPEARS ONLY WHEN FTP IS ENTERED)
4.6	=	NAUTICAL MILES FOR DTG (RANGE IS .0 THRU 999.9)
ETA	=	ESTIMATED TIME OF ARRIVAL TO FTP
1026 12		ZULU TIME FOR ETA (RANGE IS 0000 00 THRU 2359 59)
8	=	DISPLAY SCALE IN NAUTICAL MILES. MEASURED FROM CENTER OF TAC PLOT TO NEAREST EDGE (RANGE IS 2, 4, 8,16, 32, 64,128, 256, 512, OR 1024)
WIND	=	WIND DIRECTION AND SPEED
230–12	=	WIND DIRECTION IN DEGREES (RANGE IS 000 THRU 359) AND WIND SPEED IN KNOTS (RANGE IS 0 THRU 999)

Figure 1-32. COTAC Tactical Display (Sheet 2)

In addition, a maximum of two FTPs can normally be displayed at any one time. These two FTPs have sequential priority numbers, regardless of type. Harpoon targeting information including waypoints, destruct and enable points, and envelopes can be displayed. ESM emitters that may present a lethal threat to the aircraft are displayed.

Note

Displaying ESM threat emitters reconfigures the pilot display to the ESM plot and deletes all symbology, including Harpoon targeting data, that is not associated with the ESM plot.

1.7.2 COTAC MPD. The COTAC tactical plot (see Figure 1-32) presents a complete view of the tactical situation and is similar to the TACCO/SENSO tactical display. Physical location of the cue, alert, tableau, and peripheral readout areas differ from the TACCO/SENSO MPDs. The tableau display area is limited to a maximum of 14 lines for the first half of a tableau page and 16 lines for the second half. Pressing ADV displays the next 16 lines of a tableau.

In addition to the tactical plot display, the copilot/COTAC may select for display scan-converted PPI or B-Scan radar, FLIR, or ESM plot displays. Typical

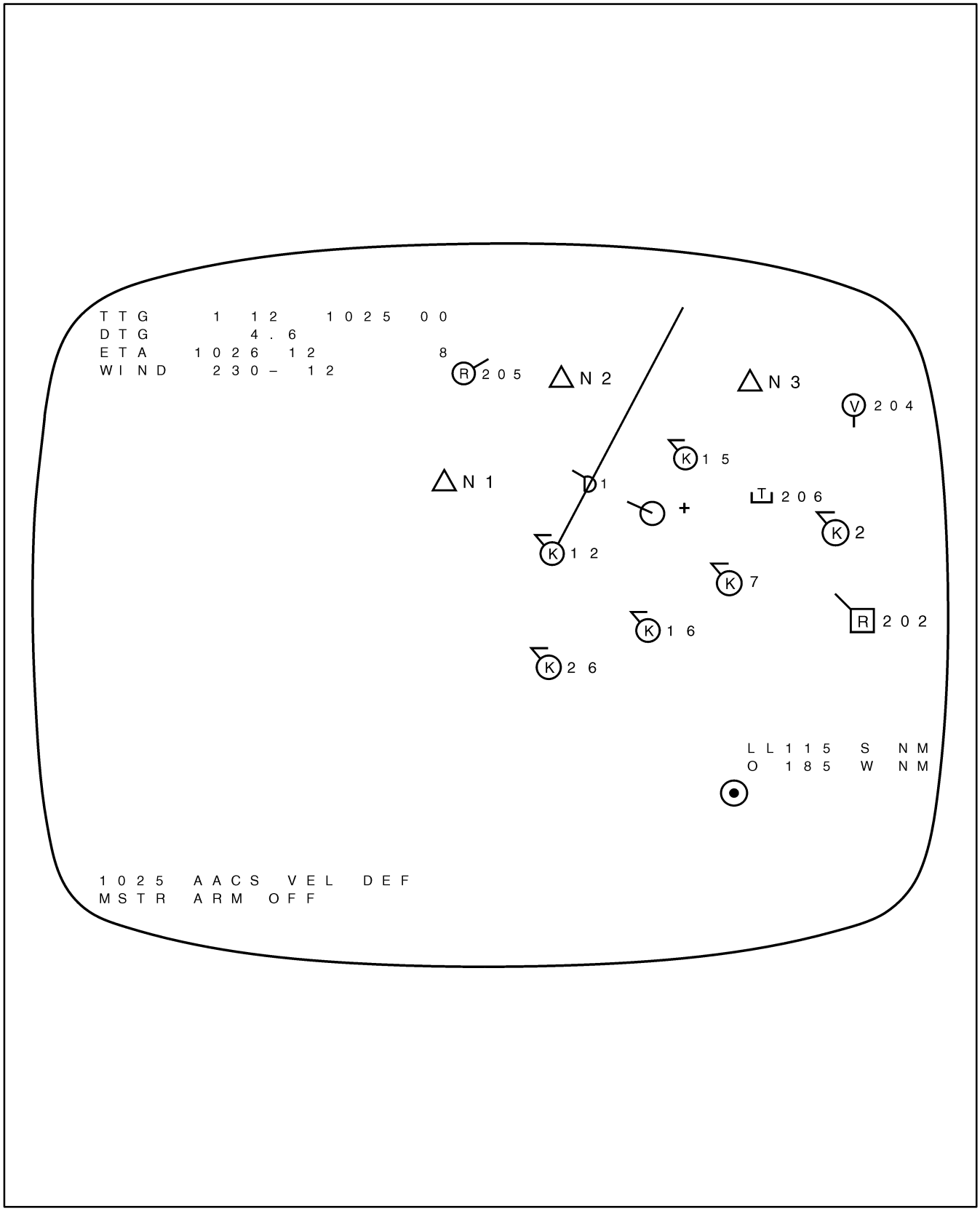

Figure 1-33. TACCO/SENSO Tactical Plot

examples of these display formats are shown in the corresponding systems description in Chapter 6.

1.7.3 TACCO/SENSO MPD. The TACCO/SENSO tactical plot display (see Figure 1-33), like the COTAC tactical plot display, presents a complete real time view of the tactical situation. The physical arrangement of the TACCO/SENSO display allows a complete tableau page (30 lines) to be displayed. Also, all sensor data may be displayed. Refer to Chapter 6 for examples of the various nonacoustic sensor display formats.

1.8 INTEGRATED CONTROL SYSTEM

1.8.1 Introduction. The INCOS allows the operator to command the GPDC to perform a variety of calculations, control peripheral subsystems, store selected data, and display specific information. The GPDC communicates with the operator in several ways:

1. Lighting a portion of the selected switch amber, notifying the operator that his command is being acted upon

2. Displaying requested information and/or making INCOS switches available by lighting their legend or status indicators

3. Displaying alerts and cues on the displays.

The INCOS components are listed in Figure 1-34.

FO-1 through FO-4 show the INCOS component locations at each crew station.

1.8.2 Built-In Test Equipment. The BITE indicator provides visual indication of an INCOS panel failure. The indicator appears black during normal operation and displays a white dot when a fault is set. The BITE indicator may be set automatically when the GPDC detects an INCOS panel fault or manually by pressing the BITE SET button. Pressing the BITE SET button reports a failure to the GPDC and displays an identifier indicator of the last switch pressed for a 10-second period. It may be possible to restore a disabled INCOS by manipulating the last switch depressed and reinitializing the appropriate DISCOS in the SYSTEM STATUS Tableau. See FO-16 for the identifier number of each INCOS switch.

WARNING

The TACCO or SENSO tray shall never be raised and dropped in an attempt to regain its function. It could fall past the stop and become jammed below the full down position, making safe ejection unlikely.

1.8.3 Trackball, Hook Verify, and Enter

1.8.3.1 Trackball. The trackball controls the movement of the hook on the MPDs.

Note

With an operational program loaded, if INCOS switches at all stations are in a locked (inoperative) condition, cycling the COMPUTER GROUP switch from ON-OFF-ON will perform a complete system REINIT and may restore INCOS operation.

TYPE DESIGNATOR	NOMENCLATURE	COMMON TERMINOLOGY	LOCATION
C-8862ASQ-147	Tactical Indicator Control	Pilot Display Control	Pilot station
C-8859/ASQ-147	Computer Indicator Control	Copilot/COTAC INCOS Panel	Copilot/COTAC station
C-8860/ASQ-147	Computer Indicator Control	TACCO INCOS Tray	TACCO station
C-8861/ASQ-82	Computer Indicator Control	SENSO INCOS Tray	SENSO station

Figure 1-34. INCOS Components

1.8.3.2 Hook Verify. The HOOK VERIFY switches cause the current hook position to be recorded in the GPDC memory. Placing the hook over a particular point of interest (a symbol, contact, or geographic position) and pressing either HOOK VERIFY informs the GPDC that this point on the display is the point upon which the next function will take action. Positioning the hook symbol and pressing either HOOK VERIFY is called hooking. If a symbol is hooked within 3/16-inch of a symbol position, the symbol flashes at 1-second intervals. The symbol flashes until acted upon by another function or until HOOK VERIFY is pressed again. If more than one symbol is within the 3/16-inch radius circle, only one symbol flashes. If the wrong symbol flashes, pressing HOOK VERIFY causes successive symbols to flash until the desired symbol flashes. When no symbol in the 3/16-inch radius circle is flashing, hooking acts on the geographic position rather than a symbol.

1.8.3.3 Enter. The ENTER switch is pressed when data are to be transferred from the cue verification area into the GPDC program memory. The current cue is then erased and the next step in a processing sequence is begun. If the data entry is the last step of a function, the function is completed.

1.8.4 Switch Lighting Conventions. INCOS switches have three lighting conditions to indicate the status of the system or function they control:

1. Unlighted (black) — not available
2. Green — available
3. Amber — active.

INCOS lamp life can be prolonged significantly by turning the respective station lamp dimmers down during periods of inactivity.

1.8.5 INCOS Switch Actions. INCOS switches fall into three categories defined according to the system reaction that results from a switch depression:

1. Momentary action (M/A)
2. Alternate action (A/A)
3. Single action (S/A).

1.8.5.1 Momentary Action. Momentary action switches perform a single discrete action or series of actions that take such a short time to complete (within 1/2 second) that a change in switch lighting may not occur.

1.8.5.2 Alternate Action. A/A switches perform a continuous series of actions as long as the switch is active (amber). Pressing the switch changes the lighting from green to amber. Some A/A switches must be pressed when active (amber) to terminate the function and some A/A switches require the activation of another function for termination.

1.8.5.3 Single Action. S/A switches perform a single discrete action or a series of discrete actions that occur over a time period greater than 1/2 second. Pressing the switch changes the switch lighting from green to amber. The GPDC terminates the single action function when processing is completed. Pressing an active (amber) S/A switch a second time has no effect. Single action switch functions can be terminated before processing is completed if a cueing sequence is interrupted by selecting another function requiring the cueing area. There are, however, switches (S/A, A/A) that normally act like S/A switches except that the function they control can be aborted in the middle of a processing sequence the same as an A/A type switch.

1.8.6 INCOS Switch Types. INCOS switches are divided into four general types:

1. Matrix select
2. Option select
3. Display control
4. Keyset.

Note

- Exceptions to the following general rules are explained in the individual control descriptions.
- For each INCOS switch described in this manual, the following format is used.
- Additional COTAC INCOS switches are displayed as broken lines.

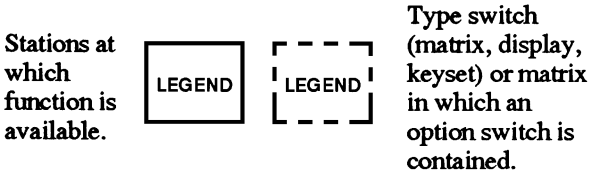

1.8.6.1 Matrix Select Switches (See FO-5 through FO-10). Matrix select switches, when

pressed, call up and display legends on up to 12 other switches called option select switches. There are no pilot matrix select switches.

Matrix select switch legends automatically light green when the associated functions are available for use. The legends light amber when the functions are active (in use). Usually a matrix select switch becomes active only after switch depression. Matrix select switch legends go out when the associated function becomes unavailable. Matrix select switches are single action switches.

A dot (●) appearing as a switch legend indicates that the switch is a spare and has no present functions.

1.8.6.2 TACCO/SENSO Matrix Select Switches. The TACCO/SENSO switch in the lower right corner of the display control group controls the mode of the matrix A and matrix B select switches. When TACCO is active (amber), upper matrix select switch legends are lighted. The SENSO mode/lower matrix select switches are no longer available or assigned. FO-8 and FO-9 show the TACCO matrix A and B select switches and their corresponding option select function legends.

1.8.6.3 COTAC Matrix Select Switches. The A and B segments are matrix select switches with legends corresponding to the TACCO matrix select group. There are no amber light bulbs in the A and B segments; they only light green. FO-5 and FO-6 show the COTAC A and B matrix select switches and their corresponding option select function legends.

Pressing a matrix A or matrix B select switch brings up the associated option select function legends and returns the matrix select switch legends to the C (display control) mode. Thus, the COTAC can display data from any system and return to the use of display control functions while viewing the data.

1.8.6.4 Option Select Switches (See FO-5 through FO-10). Option select switches are used by the operator to exercise control over most S-3 systems. Each option select switch displays legends depending on the matrix select switch which is currently active.

Option select switches, like matrix select switches are divided into two halves. The upper and lower halves are associated with TACCO and SENSO functions, respectively. The SENSO mode/lower matrix select switches are no longer available or assigned. At the COTAC station, the upper and lower halves are associated with matrix A and matrix B, respectively. Unlike matrix select switches, option select function legends are always lighted amber. The half of the switch without the legend lights and displays the status of the switch. The colors signify the same operational status as in the matrix select switches; active (amber), available (green), and not available (black).

1.8.6.5 Display Control Switches. Display control switches are used in a manner similar to option select switches, for exercising control of various display functions. TACCO/SENSO display control switches are constructed similar to matrix select switches with upper (TACCO) and lower (SENSO) halves. The SENSO mode/lower matrix select switches are no longer available or assigned. The switch legends illuminate to indicate function status, in a manner similar to matrix select switches.

1.8.6.6 Keyset Switches. Keyset switches are used to enter numbers or letters (only numbers at COTAC station) into the GPDC. They are also used to change display scales, enter data into tableaus, and perform various functions relative to operator/GPDC communications. Keyset switches are either not available (black) or available (green). There are no amber lights in the keyset.

1.8.7 Keyset Functions. The keyset has two modes of operation:

1. Normal mode
2. Alphanumeric mode (TACCO/SENSO stations).

1.8.7.1 Normal Mode. Program initialization activates the normal mode of operation and the following functions are available:

1. INDEX
2. CLR ALERT (clear alert)
3. CLR PT DATA (clear point data)
4. ADV (advance)
5. SKIP CUE (skip cue)
6. RCNTR (recenter)
7. REPEAT
8. BACK SPACE
9. INCR SCALE (increase scale)

10. SELECT LINE
11. TERM CUE SEQ (terminate cue sequence)
12. DECR SCALE (decrease scale).

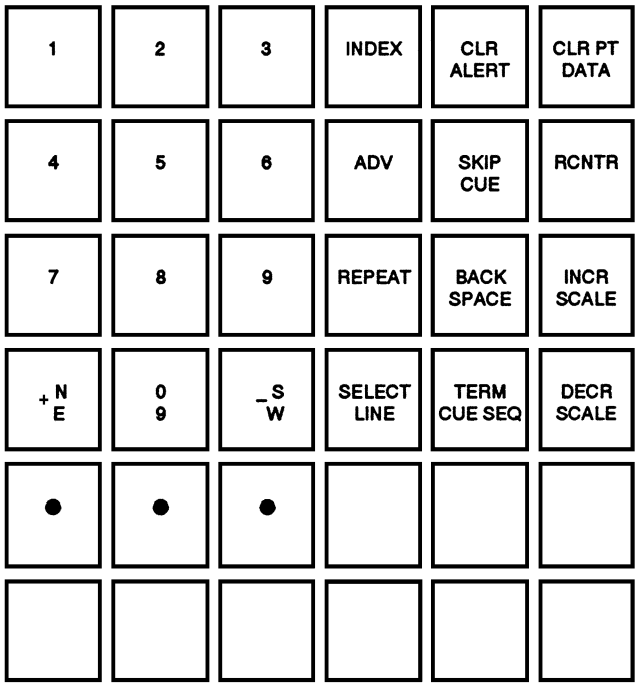

1.8.7.1.1 INDEX

TACCO
SENSO
COTAC

KEYSET

PURPOSE:

Displays the INDEX Tableau.

PREREQUISITE:

1. Operational program is loaded.

PROCEDURE:

1. Press INDEX (momentary).
   a. The INDEX Tableau is displayed.
   b. The following cue appears:

      ENT LINE NUM
      --

2. Respond to the cue.
3. Press ENTER.
   a. The selected tableau is displayed.

DEACTIVATION:

1. INDEX is deactivated when another tableau is displayed.
2. Deactivation result:
   a. The tableau and cue areas are cleared.

1.8.7.1.2 CLR ALERT

TACCO
SENSO
COTAC

KEYSET

PURPOSE:

Removes the most recent alert from the display.

PREREQUISITE:

1. A system alert is displayed.

PROCEDURE:

1. Press CLR ALERT (momentary).
   a. The most recent alert is cleared from all displays.
   b. The next alert stored in memory is displayed.

Note

A given system alert may be displayed at all stations simultaneously. Activation of CLEAR ALERT by any one operator will clear a given alert from all displays. Coordination between crewmembers should be exercised prior to the clearing of any alert so that the impact of that alert is understood by all crewmembers prior to its being cleared.

1.8.7.1.3 CLR PT DATA

TACCO
SENSO
COTAC

CLR PT DATA

KEYSET

PURPOSE:

Clears hooked symbols and data from the display.

PREREQUISITES:

1. Tactical plot, ESM plot, or radar PPI (scan-converted) is displayed on the MPD.
2. A clearable symbol is displayed on MPD (see Figure 1-35).

PROCEDURE:

1. Hook the symbol to be cleared.

Note

The hooked symbol flashes.

2. Press CLR PT DATA (momentary).
   a. The hooked symbol and the amplifying data are removed from the display.
3. If no HOOK VERIFY has been performed, the following cue is displayed:

```
SEL CLEAR POINT
1 ESM CNT
2 SUB TRK
3 SUR TRK
4 AIR
5 RDRSUB
6 REMOTE
```

4. Select category and press ENTER.
5. Selected category is removed from display.

1.8.7.1.4 ADV

TACCO
SENSO
COTAC

ADV

KEYSET

PURPOSE:

Displays the next page of a multiple page tableau.

PREREQUISITE:

1. A tableau is displayed.

PROCEDURE:

1. At the TACCO/SENSO station, press ADV (momentary).
   a. The next page of the tableau is displayed.

Note

If the last page of a tableau is displayed, the first page of the same tableau appears when ADV is pressed.

2. At COTAC station, press ADV.
   a. If the top half of a tableau page is displayed:
      (1) The bottom half of the same page appears.

Note

On the COTAC MPD, the top half of a tableau page displays lines 1 through 14, and the bottom half displays lines 15 through 30.

SYMBOL	CLEAR POINT DATA			DESTROY DATA	
	CLEARS ONLY	CLEARS & DESTROYS	NO EFFECT	DESTROYS	NO EFFECT
ACTIVE GEO AIDS			X		X
AIRCRAFT MARK		X		X	
AIRCRAFT TRACK HISTORY			X		X
CONTACTS	X			X	
CONTINUOUS PREDICT			X		X
CV			X		X
DATA LINK (REMOTE CONTACTS)	X			X*	
DEPOSITED GEO AID		X		X	
DISTRESSED VESSEL			X	X	
DOWNED AIRCRAFT			X	X	
MAN IN WATER			X	X	
FAR ON CIRCLE			X		X
FIXES	X			X	
FIX HISTORY SYMBOLS			X	X	
FLY-TO-POINTS, ORBIT CIRCLE			X		X
FLY-TO-POINTS (NONALTERNATE ACTION)		X		X	
HOOK			X		X
LATITUDE/LONGITUDE		X		X	
READOUTS					
LOST CONTACT		X		X	
NEW UNACKNOWLEDGED	X			X	
CONTACTS					
NON SUB		X		X	
ON TOP		X		X	
OWN AIRCRAFT			X		X
PROBABILITY CONTOURS			X		X
RANGE CIRCLE		X		X	
RANGE RADIUS CIRCLE		X		X	
REFERENCE MARK		X		X	
SINGLE PREDICTED POSITION			X		X
SONOBUOYS		X		X	
TRACKS	X			X	
WEAPON SPLASH POINT		X		X	

*All remote (DATA LINK) contacts may be destroyed but will be redisplayed if received on another net cycle.

Figure 1-35. Clear/Destroy Display Symbols

b. When the bottom half of a single-page tableau is displayed:

(1) Press ADV.

(2) The top half of the same page appears.

c. When the bottom half-page of a multipage tableau is displayed:

(1) Press ADV.

(2) The top half of the next page appears.

d. When the bottom half of the last page of a tableau is displayed:

(1) Press ADV.

(2) The top half of the first page appears.

1.8.7.1.5 SKIP CUE

TACCO
SENSO
COTAC

KEYSET

PURPOSE:

Bypasses an optional cue and proceeds to the next cue in the sequence.

PREREQUISITE:

1. Optional cue is displayed.

PROCEDURE:

1. Press SKIP CUE (momentary).

a. The displayed optional cue is cleared from the MPD.

b. If the cue is part of a sequence, the next cue is displayed.

c. If the displayed cue is the last cue in the sequence, the function terminates.

1.8.7.1.6 RCNTR

TACCO
SENSO
COTAC

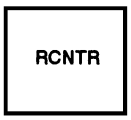

KEYSET

PURPOSE:

Recenters the display around either (1) own aircraft symbol or (2) a hooked position on the display.

PREREQUISITE:

1. TAC PLOT, ESM plot, scan-converted, or raw radar PPI is active.

PROCEDURE:

1. To recenter the display on a hooked position:

a. Position the hook at the desired geographic coordinates.

(1) Press HOOK VERIFY (momentary).

(2) Press RCNTR (momentary).

(3) The display recenters around the hooked position.

2. To recenter the aircraft around own aircraft position:

a. Press RCNTR.

(1) The display recenters around own aircraft position.

Note

The display scale is not affected when the recenter function is activated.

1.8.7.1.7 REPEAT

TACCO
SENSO
COTAC

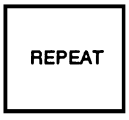

KEYSET

PURPOSE:

Allows the operator to insert a computer suggested character into a data entry cue with each switch depression.

PREREQUISITE:

1. A data entry cue containing a suggested entry is displayed.

PROCEDURE:

1. If the operator wishes to use the entire suggested entry, proceed to step 3.
2. If the operator wishes to modify a portion of the suggested entry, proceed to step 4.
3. Press ENTER.
   a. The displayed optional cue is cleared from the MPD.
   b. If the cue is part of a sequence, the next cue is displayed.
   c. If the displayed cue is the last cue in the sequence, the function terminates.

1.8.7.1.8 BACK SPACE

TACCO
SENSO
COTAC

KEYSET

PURPOSE:

Removes character entries from the cue verification area and moves entries one space to the right.

PREREQUISITE:

1. Operator entered characters are displayed in the cue verification area of a data entry cue.

PROCEDURE:

1. Press BACK SPACE (momentary).
   a. The last entered character is removed from the display.
   b. All remaining characters in the cue verification area are moved one space to the right.

1.8.7.1.9 INCR SCALE

TACCO
SENSO
COTAC

KEYSET

PURPOSE:

Increases the range scale of the TAC PLOT, ESM plot, and radar displays by multiples of two.

PREREQUISITE:

1. TAC PLOT, ESM plot, or radar mode is active.

PROCEDURE:

1. Press INCR SCALE (momentary).
   a. If no alert appears, the display range is doubled.
   b. If the SCALE LIMIT alert appears, the display is at maximum scale.

Note

- The scale increments in TAC PLOT and ESM modes are 2, 4, 8, 16, 32, 64, 128, 256, 512, and 1,024 nm.
- The scale increments in the navigation/ weather and surface search modes are 8, 16, 32, 64, 128, and 200 nm.
- The scale increments in the radar periscope mode are 8, 16, and 32 nm.
- The range scale readout represents the distance from display center to any one of the four cardinal points.

1.8.7.1.10 SELECT LINE

TACCO
SENSO
COTAC

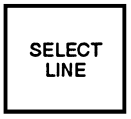

KEYSET

PURPOSE:

Selects a line within a tableau other than the INDEX Tableau.

PREREQUISITE:

1. A modifiable tableau is displayed.

PROCEDURE:

1. Press SELECT LINE (momentary).

   a. The following cue appears:

      ENT LINE NUM
      XX

   b. The first modifiable line number of the displayed tableau is the suggested entry.

2. Respond to the ENT LINE NUM cue.

Only line numbers with modifiable lines may be selected.

3. Press ENTER.

   a. The following cue appears:

      MODIFY LINE XX

4. Respond to the MODIFY LINE cue.

   a. Enter modifications to the displayed tableau line.

5. Press ENTER.

   a. The tableau line is modified as directed.

   b. MODIFY LINE cue is redisplayed for the next modifiable line of the tableau.

DEACTIVATION:

1. SELECT LINE is deactivated when one of the following occurs:

   a. TERM CUE SEQ is pressed.

   b. Another tableau is displayed.

   c. A function requiring use of the cue area is activated.

2. Deactivation result:

   a. ENT LINE NUM cue is removed from the cue area.

   b. ENT LINE NUM cue remains displayed if the INDEX Tableau is selected for display.

1.8.7.1.11 TERM CUE SEQ

TACCO
SENSO
COTAC

KEYSET

PURPOSE:

Terminates a series of optional cues.

PREREQUISITE:

1. Optional cue is displayed.

PROCEDURE:

1. Press TERM CUE SEQ (momentary).

   a. The displayed cue is cleared.

   b. The next cue in the sequence is inhibited.

Note

TERM CUE SEQ may deactivate a function if the optional cues would have completed the function. However, exceptions may exist with certain functions and are described in their respective operating procedures.

1.8.7.1.12 DECR SCALE

TACCO
SENSO
COTAC

KEYSET

PURPOSE:

Decreases the display range scale of the TAC PLOT, ESM plot, and radar display modes by multiples of two.

PREREQUISITE:

1. TAC PLOT, ESM plot, or radar mode is active.

PROCEDURE:

2. Press DECR SCALE (momentary).

   a. If no alert appears, the display range in tactical plot or ESM mode is halved.

   b. If the alert NOT AVAIL appears, the TAC PLOT, ESM, or radar display mode is not active.

   c. If the alert SCALE LIMIT appears, the display is at minimum scale.

Note

- In TAC PLOT and ESM modes, the scale step decreases are 1,024, 512, 256, 128, 64, 32, 16, 8, 4, and 2 nm.
- In surface search and navigation weather radar modes, the following scales are available: 200, 128, 64, 32, 16, and 8. In periscope mode, the following scales are available: 32, 16, and 8.

1.8.7.1.13 NUMERIC ENTRY

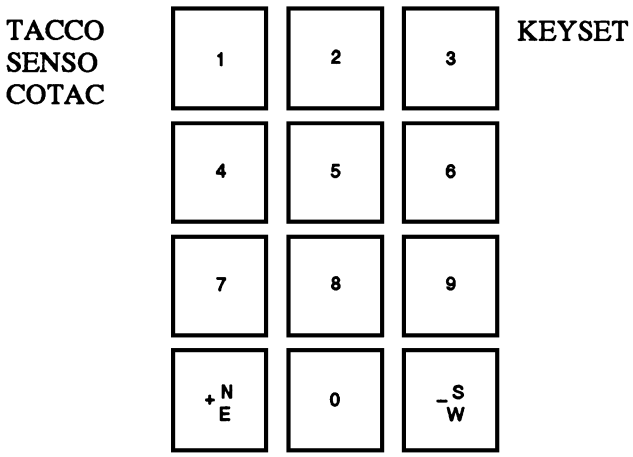

PURPOSE:

Enters numbers and direction (north, south, east, west, or + or – sign) in response to cues.

PREREQUISITES:

1. Keyset is in normal mode.
2. A cue response is required by the program.
3. Keyset numeric legends are lighted green.

PROCEDURE:

1. Press the appropriate numeric switches (momentary).

   a. Numbers appear in the cue verification area of the display.

   b. Operator visually verifies the numbers.

2. Press ENTER.

   a. The cue is cleared from the display.

   b. The numbers in the cue verification area are entered into the GPDC.

1.8.7.2 TACCO/SENSO Alphanumeric Mode. To change from the normal mode into the alphanumeric mode, press the black lower left corner switch of the six-by-six switch group. The switch legend ALPHA NUM lights green and the alphanumeric mode-shift up or alphanumeric mode-shift down legends appear, whichever of the two modes was last active.

The following tableaus may be modified by using the alphanumeric mode:

1. Note pad
2. Rig
3. Flight Summary (pages 1 and 5 only).

The alphanumeric upper shift activates the following functions:

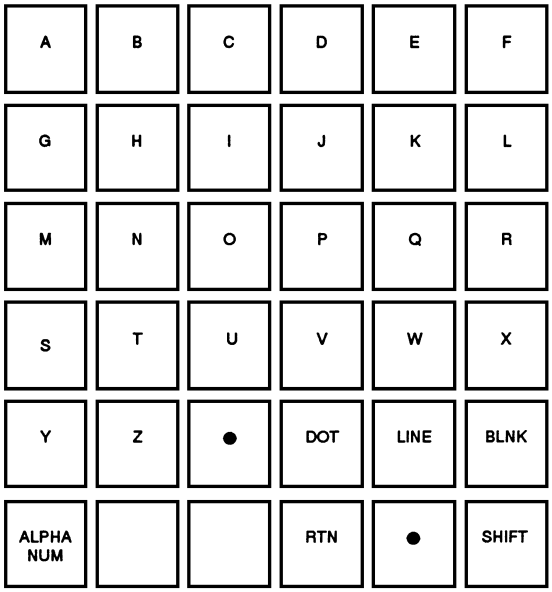

The alphanumeric lower shift activates the following functions:

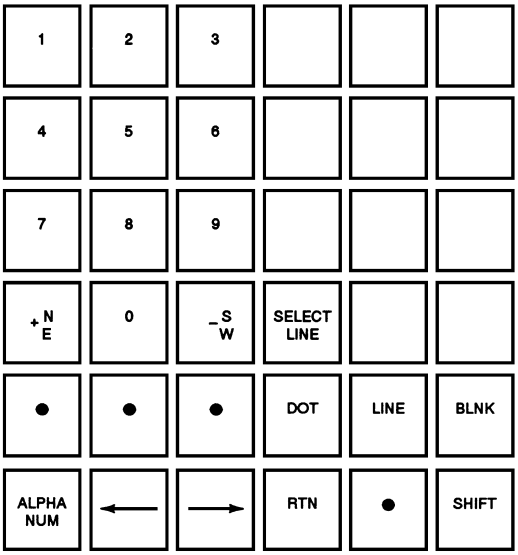

In alphanumeric lower shift, numbers may be entered in the special tableaus but may not be used to answer any other cues or modify any other tableaus.

DOT — Places a dot into a data entry in both upper and lower shifts.

LINE — Removes all entered characters in the verification area in both upper and lower shift. If no characters are entered, the computer ignores the input.

BLNK — (BLANK) Enters a blank space into a data entry in both upper and lower shifts.

← — (LEFT SPACE ARROW) Moves all entered characters on the verification area one space to the left in both alphanumeric shifts. If the characters are already at the far left, the program ignores the input.

→ — (RIGHT SPACE ARROW) Causes function identical to left space arrow except that movement is to the right.

RTN — (RETURN) Transfers a line of data from the cue verification area to a tableau modifiable by alphanumerics.

Note

- If no line is selected, the data are transferred to the highest modifiable line that does not already have data displayed.
- If a line number is selected prior to construction of the line, the data are transferred to that line.
- Successive lines of data can be constructed, one at a time in the cue verification area and transferred to a tableau.
- Data may be retained in the tableau for further entry and/or editing by exiting the ALPHANUMERIC mode and returning to complete the entry at a later time.

SHIFT — Shifts the ALPHANUMERIC mode from upper to lower or lower to upper, successively pressing switch to the opposite shift.

The numbers 0 through 9, + N E, and – S W switches illuminate green (available) only when a cue response is required by the program. Pressing one or more

consecutive number switches displays the numbers in the cue verification area until entered into the GPDC data base in response to the displayed cue. Upon completion of the cueing sequence, the switch lighting is extinguished.

Pressing the + N E and – S W in some cue responses displays the + or – when appropriate.

As the first character for latitude, pressing + N E displays N (north) in the first character position and – S W displays S (south). Pressing any other numeric results in an INVALID ENTRY alert when ENTER is pressed.

As the first character for a longitude entry, pressing a + N E entry displays E (east) and – S W displays W (west). Pressing any other numeric results in an INVALID ENTRY alert when ENTER is pressed.

1.8.8 Display Control Functions

1.8.8.1 TACCO/SENSO Display Control. The display control switches, used to control and modify the MPD displays, has one function. The upper switch legends are associated with the TACCO mode and light when the TACCO switch is amber. The SENSO mode/lower matrix select switches are no longer available or assigned. The TACCO mode display control functions are discussed in the following procedures. The various display control switches follow the standard green, amber, and black lighting convention.

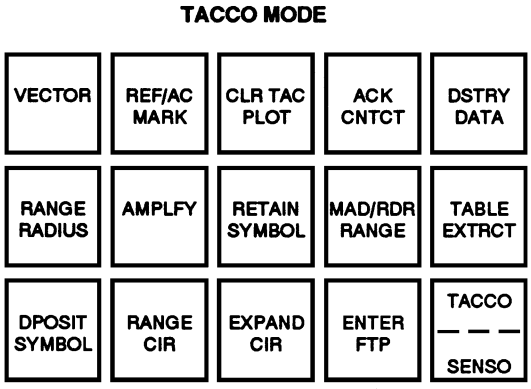

1.8.8.1.1 VECTOR

TACCO
SENSO
COTAC

VECTOR

DISPLAY CONTROL

PURPOSE:

Provides a vector on the MPD with bearing and range readout between a selected point and the movable hook symbol.

PREREQUISITE:

1. TAC PLOT, ESM plot, or radar PPI is displayed on the MPD.

PROCEDURE:

1. Determine the point of origin for the vector.
   a. If the vector is to originate from own aircraft position, proceed to step 2.
   b. If the vector is to originate from a hooked position, proceed to step 3.
2. Press VECTOR (lights amber).
   a. If no alert appears, a vector from the own aircraft symbol to the hook symbol is displayed on the MPD.
      (1) Terminal end of the vector moves with the hook symbol.
      (2) Vector readout (bearing and range) is displayed adjacent to the hook symbol.
      (3) Vector readout varies with respect to hook movement and aircraft movement.

Note

- True bearing from own aircraft to vector symbol is displayed.
- Range is displayed in nautical miles if the display scale is 32 nm or greater.
- Range is displayed in yards if the display scale is 16 nm or less.

- Vector symbol (V) appears at the side of the hook symbol.

- If own aircraft symbol is off the display, the vector originates on the edge of the display.

3. If the vector is to originate from a hooked position, hook the desired position on the MPD.

4. Press VECTOR (lights amber).

   a. If no alert appears, a vector from the hooked position to the hook symbol is displayed on the MPD.

      (1) Terminal end of the vector moves with the hook symbol.

      (2) Vector readout (bearing and range) is displayed adjacent to the hook symbol.

      (3) Vector readout varies with respect to hook symbol movement.

Note

- True bearing from the origin of the vector is displayed.

- Range is displayed in nautical miles if the display scale is 32 nm or greater.

- Range is displayed in yards if the display scale is 16 nm or less.

- Vector symbol (V) appears at the side of the hook symbol.

DEACTIVATION:

1. VECTOR is deactivated when pressed if the legend is amber.

2. Deactivation results:

   a. VECTOR legend changes from amber to green.

   b. Vector, vector symbol, and range/bearing readout are removed from the display.

1.8.8.1.2 REF/AC MARK

TACCO
SENSO
COTAC

DISPLAY
CONTROL

PURPOSE:

Displays a reference mark at a hooked position on the MPD or an aircraft mark at the aircraft position on the MPD.

PREREQUISITE:

1. TAC PLOT, ESM plot, or scan-converted radar PPI is displayed on the MPD.

PROCEDURE:

1. The operator chooses one of the following:

   a. If a reference mark is to be displayed, proceed to step 2.

   b. If an aircraft mark is to be displayed, proceed to step 4.

2. Hook the desired location on the MPD.

3. Press REF/AC MARK (momentary).

[ ]

   a. If no alert appears, a reference mark is displayed on the MPD at the hooked position.

4. To display an aircraft mark at the aircraft position on the MPD, press REF/AC MARK.

[A]

   a. If no alert appears, an aircraft mark is displayed on the MPD at the position of own aircraft symbol.

DEACTIVATION:

1. Reference marks and aircraft marks will remain on tactical or PPI display until removed by one of the following:

   DSTRY DATA
   CLR PT DATA

2. Reference marks and aircraft marks removed from tactical or PPI display are destroyed and removed from the data base.

1.8.8.1.3 CLR TAC PLOT

TACCO
SENSO
COTAC

DISPLAY
CONTROL

PURPOSE:

Allows the operator to clear tactical symbology from the MPD with a single switch to avoid graphic overload conditions and delay in additional processing functions.

PREREQUISITE:

1. Display is in TAC PLOT, ESM plot, or PPI scan-converted radar mode.

PROCEDURE:

1. Press CLR TAC PLOT (lights amber).

Note

- CLR TAC PLOT is activated (lights amber at TACCO and SENSO stations) automatically when ESM or PPI scan-converted radar plot is displayed.

- COTAC display control functions do not light amber when active.

   a. Clears (C), or remains displayed (D) symbols as shown in Figure 1-36.

   b. Display is limited to the two highest priority FTPs.

DEACTIVATION:

1. CLR TAC PLOT is deactivated when pressed.

Note

- CLR TAC PLOT is also deactivated when an ESM or scan-converted radar PPI plot is replaced by a TAC PLOT.

- Deactivating CLEAR TAC PLOT on ESM plot results in the TAC PLOT emitter line of bearing and contact number displayed over ESM emitter line of bearing and AIL number.

2. Deactivation results:

   a. Switches become available that were deactivated.

   b. Display of additional FTPs.

   c. Redisplay of all symbology cleared by activating the function.

1.8.8.1.4 ACK CNTCT

TACCO
SENSO
COTAC

DISPLAY
CONTROL

PURPOSE:

Acknowledges a new contact symbol on the display and stops contact symbol flashing.

PREREQUISITES:

1. TAC PLOT, ESM plot, or scan-converted radar PPI is displayed on the MPD.

2. ACK CNTCT alert is displayed on the MPD.

PROCEDURE:

1. Press ACK CNTCT (momentary).

   a. If no alert appears, all new contacts within the present display scale stop flashing.

      (1) Contacts and fixes stop flashing at all stations when acknowledged at any station.

SYMBOL	EXISTING ENTRIES	NEW ENTRIES	REMARKS
Air Tracks and Fixes	C	D	Redisplayable
ESM Contacts	C	D	Redisplayable
Fly-to-Point	D	D	Two highest priority
Hook/Target Designator	D	N/A	Not affected by activity
Remote (Data Link) Contacts	C	D	Redisplayable
Remote Sonobuoys	C	D	Redisplayable
Subsurface Tracks and Fixes	C	D	Redisplayable
Surface Tracks and Fixes	C	D	Redisplayable
Continuous Predict Position	D	D	
Datum	C	D	
Distressed Vessel	C	D	
Downed Aircraft	C	D	
Expand Circle	D	D	
Farthest on Circle	C	D	
Fix History	C	D	
Lat/Long Readouts	C	D	
MAD/Radar Range Circle	D	D	
Man in Water	C	D	
NOTAC Circle	C	D	
On Top	C	D	
Probability Contour	C	D	
Range Radius Circle Active	D	D	
Range Radius Circle Deposited	C	D	
Reference Marks	D	D	
Single Predict Position	C	D	
Special Pattern	C	D	
SUS	C	D	
Vector Active	D	D	
Vector Deposited	C	D	
Weapon Splash Point	C	D	
Legend: C = Clears D = Remains displayed			

Figure 1-36. Clear Tactical Plot Symbols

(2) ACK CNTCT alert is removed from the MPD.

b. If the following alert appears:

CNTCT OFF SCALE

(1) New contacts are not within the present display scale at the requesting station.

(2) Contacts are not acknowledged and continue to flash at other stations where displayed.

1.8.8.1.5 DSTRY DATA

TACCO
SENSO
COTAC

DSTRY DATA

DISPLAY CONROL

PURPOSE:

Destroys graphic data and any amplifying data pertaining to that data from the display and computer memory (see Figure 1-35).

PREREQUISITES:

1. TAC PLOT, ESM plot, or scan-converted radar PPI displayed on MPD.
2. A destroyable symbol displayed on MPD (see Figure 1-35).

PROCEDURE:

1. Hook the destroyable symbol selected to be destroyed.
2. Press DSTRY DATA (momentary).
   a. If no alert appears, the hooked symbol is removed from all displays and the system database.

1.8.8.1.6 RANGE RADIUS

TACCO
SENSO
COTAC

RANGE RADIUS

DISPLAY CONTROL

PURPOSE:

Constructs a circle with a hooked position as the center and the present hooked position on the circumference.

PREREQUISITES:

1. TAC PLOT, ESM plot, or scan-converted radar PPI is active.
2. COTAC CONICS matrix is active.

PROCEDURE:

1. Perform a hook verify at the position of the desired center of circle.
2. Press RANGE RADIUS (lights amber).
   a. A circle is displayed around the hooked point with the circumference of the circle passing through the hook symbol.

Note

- As the hook is moved, the radius of the circle will adjust so that the circle always passes through the hook symbol.
- The range readout appears in yards on the 16 nm scale or less and in nautical miles on the 32 nm scale or greater. The legend remains at the top of the displayed circle.

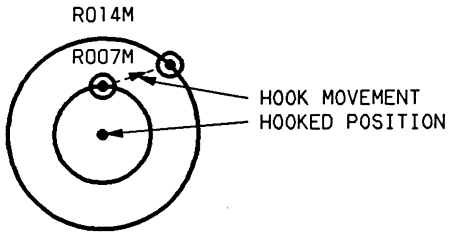

DEACTIVATION:

1. RANGE RADIUS is deactivated if pressed when amber.
2. Deactivation results:
   a. The range radius circle is removed from the display.
   b. RANGE RADIUS changes from amber to green.

1.8.8.1.7 AMPLFY

TACCO
SENSO
COTAC

DISPLAY CONTROL

PURPOSE:

Displays amplifying data, such as time of contact or track number. Also displays contact name of previously entered via RIG Tableau.

PREREQUISITE:

1. TAC PLOT, ESM plot, or scan-converted radar PPI is displayed on the MPD.

PROCEDURE:

1. Determine what symbols on the display require amplifying data.
   a. If amplifying data are required for a single symbol on the display, proceed to step 2.
   b. If amplifying data are required for all symbols on the display, proceed to step 5.
2. To obtain amplifying data of a single symbol on the display, hook the symbol.
3. Press AMPLFY (lights amber).
4. If no alert appears on the MPD, amplifying readout information is displayed with the designated symbol on the plot area of the MPD.
   a. If additional amplifying data are available, an AMPLIFYING DATA Tableau is displayed in the tableau area of the MPD.
5. To obtain amplifying data for all symbols on the display, press AMPLFY (lights amber).
   a. If no alert appears on the MPD, amplifying readout information appears with each symbol on the display.

DEACTIVATION:

1. AMPLFY is deactivated when one of the following occurs:
   a. AMPLFY is pressed when amber.
   b. TN AMPLFY function is activated.
2. Deactivation results:
   a. AMPLFY legend changes from amber to green.
   b. Amplifying readouts are removed from the plot area of the display.
   c. AMPLIFYING DATA Tableau, if displayed, remains in the tableau area of the MPD until another tableau is displayed.

1.8.8.1.8 RETAIN SYMBOL

TACCO
SENSO
COTAC

DISPLAY CONTROL

PURPOSE:

Retains displayed and redisplayed symbols on the display when the associated redisplay function is deactivated.

PREREQUISITES:

1. TAC PLOT, ESM plot, or scan-converted radar PPI is displayed on the MPD.
2. A symbol is currently displayed on the MPD that has been redisplayed.
3. One of the following matrix A REDSPL option select functions is active: ESM CNTCT, SUB TRK, SUR TRK, AIR TRK, or SONB.

PROCEDURE:

1. Hook the redisplayed symbol to be retained.
2. Press RETAIN SYMBOL (momentary).
   a. If no alert appears, the status of the redisplayed hooked symbol is changed from a

redisplayed cleared symbol to a displayed symbol.

(1) Subsequent deactivation of the associated REDSPL function will not cause the retained symbol to clear from the MPD.

1.8.8.1.9 MAD/RDR RANGE

TACCO
SENSO
COTAC

DISPLAY
CONTROL

PURPOSE:

Displays on the MPD TAC PLOT a radar range circle representing the effective area each system is capable of searching.

PREREQUISITES:

3. TAC PLOT, ESM plot, radar PPI active.

PROCEDURE:

1. Press MAD/RDR RANGE (lights amber).
   a. If no alert appears, radar range circle is displayed about own aircraft symbol on the MPD.
      (1) A radar range circle is displayed if the display scale is set for 32 nm or greater.
   b. Range circle varies in size with respect to aircraft altitude.
      (1) Radar circle increases as altitude increases.

DEACTIVATION:

1. MAD/RDR RANGE is deactivated if pressed when the switch legend is amber.
2. Deactivation results:
   a. Radar range circle is removed from display.
   b. MAD/RDR RANGE legend changes from amber to green.

1.8.8.1.10 TABLE EXTRCT

TACCO
SENSO
COTAC

DISPLAY
CONTROL

PURPOSE:

Extracts the contents of a currently displayed tableau.

Note

Performing a TABLE EXTRCT of the RIG (index 17) and the NOTE PAD (index 18) tableaus will clear them of all information.

PREREQUISITE:

1. A tableau is displayed on the MPD.

PROCEDURE:

1. Press TABLE EXTRCT (momentary).
   a. If no alert appears, the currently displayed tableau is recorded on the DMTU for post-flight analysis.
   b. If the following alert appears:

      DATA EXTR UNAVAIL

      (1) Attempt to extract a tableau was made after the DMTU has been declared defective. Function will not operate.

   c. If the following alert appears:

      ZZZZ DMTU REWIND

      (1) When the DMTU reaches the end of a track, the heads are repositioned to the beginning of the next available track.

      (2) DMTU REWIND alert remains displayed until the repositioning is completed. When repositioning is complete, DMTU READY TRACK X alert is displayed.

1.8.8.1.11 DPOSIT SYMBOL

TACCO
SENSO
COTAC

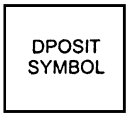

DISPLAY
CONTROL

PURPOSE:

Displays any combination of range radius circles, range circles, and vectors. Up to four symbols may be deposited as a tactical aid.

PREREQUISITES:

1. TAC PLOT or ESM plot is active.
2. Depositable symbol is displayed.

PROCEDURE:

1. The operator chooses one of the following:
   a. If only one depositable symbol is displayed, proceed to step 2.
   b. If more than one depositable symbol is displayed, proceed to step 3.
2. Press DPOSIT SYMBOL (momentary).
   a. The symbol is deposited at the display point on the MPD.
3. Press DPOSIT SYMBOL (lights amber).
   a. The following cue appears:

      SEL DPOSIT SYMBOL
      1 VECTOR
      2 RANGE RADIUS CIR
      3 RANGE CIR

4. If one of the following alerts appears when DPOSIT SYMBOL has been pressed:
   a. CAPACITY EXCD
      (1) Four symbols have already been deposited.
      (2) New symbol is not accepted.
   b. DISPLAY TABLE EXCD
      (1) The allowable limit for displayable items (including items not currently on the display) has been exceeded.
      (2) New symbol is not accepted.
   c. DSPL TABLE LIM
      (1) There is capacity for only two more displayed items.
      (2) New symbol is accepted.
   d. DISPLAY BUFFER EXCD
      (1) The allowable limit for displayed items has been exceeded.
      (2) New symbol is not accepted.
5. Respond to the cue.
   a. Press 1, 2, or 3 on the keyset.
6. Press ENTER.
   a. Selected symbol is deposited.
   b. Legend lights green.

Note

If DPOSIT SYMBOL switch is pressed during the cue sequence, the function deactivates and the legend lights green.

7. If more than one symbol is to be deposited, repeat step 3.

DEACTIVATION:

1. DPOSIT SYMBOL is deactivated:
   a. When only one depositable symbol is displayed and DPOSIT SYMBOL is pressed.
   b. When the cueing sequence is complete.
   c. When DPOSIT SYMBOL is pressed and the alerts: CAPACITY EXCD, DSPL BUFFER EXCD, or DSPL TABLE EXCD appear on the operator's MPD.
2. Deactivation result:
   a. DPOSIT SYMBOL legend lights green.

1.8.8.1.12 RANGE CIR

TACCO
SENSO
COTAC

RANGE CIR

DISPLAY CONTROL

PURPOSE:

Displays a circle centered on and positioned with the hook symbol. With trackball movement, the range circle remains centered on the hook symbol.

PREREQUISITES:

1. TAC PLOT, ESM plot, or radar PPI is active.
2. COTAC CONICS matrix is active.

PROCEDURE:

1. Press RANGE CIR (lights amber)
   a. One of the following cues appear:

      ENT RADIUS-NM
      -----
      for display scales 32 nm or greater.

      ENT RADIUS-YDS
      -----
      for display scales less than 32 nm.

2. Respond to the ENT RADIUS-NM cue or the ENT RADIUS-YDS cue.
   a. Press numbers (0 through 9999) on the keyset to select the desired nm radius or (0 through 99999) on the keyset to select the desired number of yards radius.
   b. If term cue sequence is selected the function deactivates.
3. Press ENTER.
   a. A range circle is displayed with the hook symbol as the center and the entered range in nautical miles as the radius.

DEACTIVATION:

1. RANGE CIR is deactivated if pressed when amber.
2. Deactivation results:
   a. The range circle is removed from the display.
   b. RANGE CIR legend changes from amber to green.

1.8.8.1.13 EXPAND CIR

TACCO
SENSO
COTAC

EXPAND CIR

DISPLAY CONTROL

PURPOSE:

Displays an expanding circle around a hooked position. Used to depict a target opening rate from a fix or a datum. Uses an operator entered estimate of target speed.

PREREQUISITES:

1. TAC PLOT, ESM plot, or scan-converted radar PPI is active.
2. COTAC CONICS matrix is active.

PROCEDURE:

1. Hook the desired position.
   a. If the display scale is 32 nm or greater, proceed to step 2.
   b. If the display scale is less than 32 nm, proceed to step 4.
2. Press EXPAND CIR (lights amber).
   a. The following cue appears:

      ENT RADIUS-NM
      ----

3. Respond to the ENT RADIUS-NM cue.
   a. Press numbers (0 through 9999) on the keyset to select the initial circle radius.
   b. Proceed to step 6.
4. Press EXPAND CIR (lights amber).

a. The following cue appears:

ENT RADIUS-YDS
-----

5. Respond to the ENT RADIUS-YDS cue.

   a. Press numbers (0 through 99999) on the keyset to select the initial circle radius.

6. Press ENTER.

   a. The following cue appears:

ENT EXPAN RATE-KTS
--

7. Respond to the ENT EXPAN RATE-KTS cue.

   a. Enter the rate of circle expansion in knots.

8. Press ENTER.

   a. The range circle is displayed with the initial radius in nm/yards centered around the hooked position. The circle expands at the selected rate in knots and is updated five times per second.

DEACTIVATION:

1. EXPAND CIR is deactivated if pressed when amber.

2. Deactivation results:

   a. The circle is removed from the display.

   b. EXPAND CIR legend changes from amber to green.

1.8.8.1.14 ENTER FTP

TACCO
SENSO
COTAC

ENTER FTP

DISPLAY CONTROL

PURPOSE:

Enters a monitor or designated/undesignated normal FTP into the system and displays it on the appropriate TAC PLOTS.

PREREQUISITES:

1. TAC PLOT, ESM plot, or scan-converted radar PPI display is active.

2. COTAC SCH or TACNAV is active.

PROCEDURE:

1. Press ENTER FTP (lights amber).

   a. The following cue appears:

SEL FTP
1 NORM DESIG
2 NORM UNDESIG
3 MONITOR

   b. If the following alert appears:

CAPACITY EXCD

The system capacity for displaying FTPs will be exceeded by the entry of a FTP.

Note

The maximum number of FTPs in the system is 11; 1 weapon FTP and 10 other FTPs, which may be made up of any combination of the remaining types. A list of FTP types and the maximum number of each type allowed in the system is shown.

TYPE FTP	NUMBER ALLOWED IN SYSTEM
Weapon	1
Expendable	6
Intercept	1
Orbital, Tangential Datum	1
Normal	10
Monitor	10

(1) Alert causes the function to deactivate. ENTER FTP remains green.

2. Respond to the SEL FTP cue.

   a. If decision 1 is selected, proceed to step 3.

   b. If decision 2 is selected, proceed to step 14.

   c. If decision 3 is selected, proceed to step 21.

3. For response to decision 1 (normal designated FTP) of the SEL FTP cue, the operator may enter an FTP at a geographic position defined by latitude/longitude, or at a hooked position on the TAC PLOT.

   a. To enter a normal designated FTP at a geographic position, proceed to step 4.

   b. To enter a normal designated FTP at a hooked position on the TAC PLOT, proceed to step 10.

4. Press number 1 on the keyset to select a normal designated FTP at a geographic position.

5. Press ENTER.

   a. The following cue appears:

   ENT LATITUDE
   - -- --.---

   b. Enter the latitude. First character entry is north or south.

6. Press ENTER.

   a. The following cue appears:

   ENT LONGITUDE
   - --- --.---

   b. Enter the longitude. First character entry is east or west.

7. Press ENTER.

   a. The following cue appears:

   ENT BEARING-DEG
   ---

8. Enter aircraft desired track upon arrival at designated FTP.

9. Press ENTER.

   a. Normal designated FTP is displayed on TAC PLOTS at the position specified by operator entries.

   (Δ) NXX

Note

- A 1/2-inch vector on the FTP symbol indicates the direction of the aircraft track.
- Letter N indicates the FTP type as normal.
- XX represents a one- or two-digit priority number designating the priority of the FTP with respect to others of the same type.

   b. ENTER FTP lights green.

10. Hook a position on the tactical plot where an FTP is to be entered.

11. Press number 1 on the keyset to enter a normal designated FTP at a hooked position.

12. Press ENTER.

   a. The following cue appears:

   ENT BEARING-DEG
   ---

13. Perform procedures in steps 8 and 9.

14. For response to decision 2 (normal undesignated FTP) of the SEL FTP cue, the operator may enter an FTP at a geographic position defined by latitude/longitude, or at a hooked position on the TAC PLOT.

   a. To enter a normal undesignated FTP at a geographic position, proceed to step 15.

   b. To enter a normal undesignated FTP at a hooked position on the TAC PLOT, proceed to step 18.

15. Press number 2 on the keyset to enter a normal undesignated FTP at a geographic position.

16. Perform procedures in steps 5 and 6.

17. Press ENTER.

   a. Normal undesignated FTP is displayed on TAC PLOT at the position specified by operator entries.

(Δ) NXX

Note

Letter N indicates FTP type as normal.

b. ENTER FTP lights green.

18. Hook a position on the display where an FTP is to be entered.

19. Press number 2 on the keyset to enter a normal undesignated FTP at the hooked position.

20. Perform step 17.

21. To enter a monitor FTP on the TAC PLOT, hook the desired point on the display.

22. Press number 3 on the keyset.

23. Press ENTER.

a. If no alert appears, a monitor FTP is displayed on TAC PLOT at the position specified by the operator.

(Δ) MXX

Note

Letter M indicates FTP type as monitor.

(1) ENTER FTP lights green.

DEACTIVATION:

1. ENTER FTP is deactivated when one of the following occurs:

a. Function procedures are completed.

b. ENTER FTP is pressed when amber.

c. Another function requires use of the activating operator cue area.

2. Deactivation results:

a. Cues associated with ENTER FTP are removed.

b. ENTER FTP changes from amber to green.

1.8.8.2 COTAC Display Control. The COTAC display control and matrix select switches are trifunctional (divided into three parts). The A/B/C switch, located in the upper right corner of the switch group, selects one of the three switch segments. For example, with C selected, the lower switch legends are displayed and the A (upper left) and B (upper right) legends are not displayed. The C legends correspond with the COTAC display control functions. The COTAC display control switches are labeled as shown.

VECTOR	REF/AC MARK	CLR TAC PLOT	ACK CNTCT	DSTRY DATA	C
AMPLFY	RETAIN SYMBOL	MAD/RDR RANGE	TABLE EXTRCT	DPOSIT SYMBOL	VISUAL CNTCT

COTAC display control legends do not light amber when activer.

The functions of the COTAC display control switches are the same as those described in the TACCO/SENSO display control switches, except VISUAL CNTCT. The VISUAL CNTCT function is not available to TACCO/SENSO.

TACCO/SENSO display control functions RANGE CIR, RANGE RADIUS, and EXPAND CIR are located in the COTAC CONICS matrix. The ENTER FTP is located in the COTAC SCH and TAC NAV matrices.

1.8.8.2.1 VISUAL CNTCT

COTAC | VISUAL CNTCT | DISPLAY CONTROL

PURPOSE:

To allow the operator to display, identify, and record the location of any visual sighted contact.

PREREQUISITE:

1. Matrix C is active.

PROCEDURE:

1. Press VISUAL CNTCT.

a. The following cue appears:

MISSILE SIGHTED
1 YES
2 NO

2. Respond to the MISSILE SIGHTED cue.

a. If cue decision 1 (YES) is selected, the information is entered into the system, the contact is entered into data-link and the cue is removed from the display after performing step 3.

Note

A MISSILE SIGHTED track is automatically assembled for Link 11 transmission (since there is no symbol, the operator cannot drop track or verify track number). DATA SLNCE will not be overridden. If DATA SLNCE is active, there will be no alert to inform the operator that the track has not been transmitted.

b. If cue decision 2 (NO) is selected, proceed to step 3.

3. Press ENTER.

a. The following cue appears:

ENT BEARING-DEG

Note

The bearing is measured in degrees, clockwise, relative to the aircraft heading.

4. Respond to the ENT BEARING-DEG cue.

a. Press the desired numbers on the keyset.

5. Press ENTER.

a. The following cue appears:

ENT RANGE-NM
--.-

Note

Target range is measured relative to the aircraft.

6. Respond to the ENT RANGE-NM cue.

a. Press the desired numbers on the keyset.

7. Press ENTER.

a. The range is entered into the system.

b. The following cue appears:

ENT LOCAL TN
XXXX

8. Respond to the ENT LOCAL TN cue.

a. Press desired the numbers on the keyset.

9. Press ENTER.

a. The following cue appears:

SEL CAT-ID

1	AIR	F	6	SUB	H
2	SURF	F	7	AIR	U
3	SUB	F	8	SURF	U
4	AIR	H	9	SUB	U
5	SURF	H			

b. If entered track number was previously assigned, the SEL CAT-ID cue is not displayed and the contact is automatically assigned the same CAT-ID as the existing item with that track number.

10. Respond to the SEL CAT-ID cue (local).

a. If cue decision 1, 4, 5, or 7 is selected, proceed to step 19.

b. If cue decision 2 is selected, proceed to step 17.

c. If cue decision 3, 6, or 9 is selected, proceed to step 11.

d. If cue decision 8 is selected, proceed to step 15.

11. Press ENTER.

    a. The following cue appears:

    SURFACED SUB
    1 YES
    2 NO

12. Respond to the SURFACED SUB cue.

    a. If decision 1 is selected, proceed to step 17.

    b. If decision 2 is selected, proceed to step 13.

    c. A SKIP CUE or term cue sequence response will assume NO to the cue.

13. Press ENTER.

    a. The following cue appears:

    SEL SUBSURF CLASS
    1 NO STATEMENT
    2 POSSIBLE SUB
    3 PROBABLY SUB
    4 CERTAIN SUB
    5 NON SUB OPTNL

14. Respond to the SEL SUBSURF CLASS cue.

    a. If decision 1 or 5 is selected, proceed to step 23.

    b. If decision 2 is selected, proceed to step 15.

    c. If decision 3 or 4 is selected, proceed to step 17.

15. Press ENTER.

    a. The following cue appears:

    ENT CONF LEVEL
    1-4

16. Respond to the ENT CONF LEVEL cue.

17. Press ENTER.

    a. The following cue appears:

    SEL CLASS AMP
    1 PROPULSION UNK
    2 PROPULSION CON
    3 PROPULSION NUC
    OPTNL

18. Respond to the SEL CLASS AMP cue.

    a. Proceed to step 23.

19. Press ENTER.

    a. The following cue appears:

    SEL PRI ID AMP
    1 EVALUATED UNK
    2 ASSUMED FRIEND
    3 ASSUMED HOST

20. Respond to the SEL PRI ID AMP cue.

    a. Press 1, 2, or 3 on the keyset.

21. Press ENTER.

    a. The following cue appears:

    SEL PRI ID AMP
    1 CONFIRMED FRIEND
    2 AUXILIARY
    3 SPECIAL MISSION
    4 AMPHIBIOUS
    5 LINE

22. Respond to the SEL PRI ID AMP cue.

    a. Press 1, 2, 3, 4, or 5 on the keyset.

23. Press ENTER.

    a. The parameters of the hooked track fixes or datum are modified.

    b. Function deactivates.

Note

When a SKIP CUE option is available and selected for the SEL CAT-ID, and related cues, the parameter previously assigned to the track remains unchanged.

DEACTIVATION:

1. VISUAL CNTCT is deactivated when:

   a. Pressed during the cueing sequence.

   b. ACK CNTCT is pressed at the TACCO/ SENSO stations.

   c. Changing from a tactical to a nontactical display mode when a cue is displayed.

1.8.8.3 Pilot Display Control. The pilot display control (see Figure 1-37), located in the left console, contains the following on-line controls.

1. SONB (TASK NOT ASSIGNED is displayed if SONB is selected.)
2. CLEAR ALERT
3. A/C TRACK
4. EXTEND TRACK VECTOR
5. ESM T
6. INCR SCALE
7. SUR CNTCT
8. AUTO SCALE
9. RCNTR ON A/C
10. RCNTR ON FTP
11. DECR SCALE.

The above controls are explained in further detail, giving the purpose, prerequisite, step by step procedure, and deactivation.

1.8.8.3.1 SONB

PILOT | SONB | DISPLAY CONTROL

TASK NOT ASSIGNED is displayed if SONB is selected.

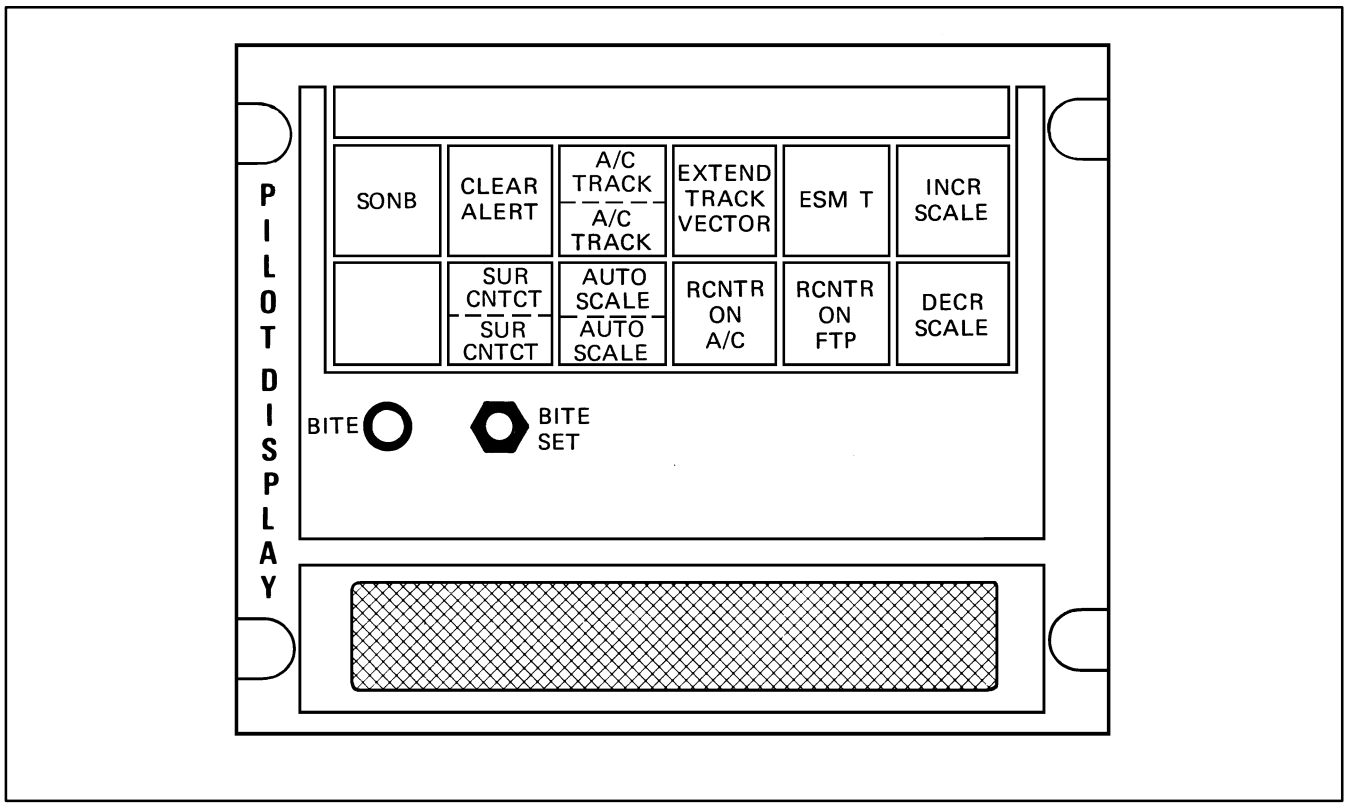

Figure 1-37. Pilot Display Control Panel

1.8.8.3.2 CLEAR ALERT

PILOT | CLEAR ALERT | DISPLAY CONTROL

PURPOSE:

Removes the latest system alert from all displays. Keyset and function alerts are not affected.

PREREQUISITE:

1. System alert is displayed.

PROCEDURE:

1. Press CLEAR ALERT (momentary).

   a. The most recent system alert is cleared from all displays.

   b. If more than one alert is displayed, CLEAR ALERT must be pressed once for each alert.

Note

- All alerts are not displayed on the pilot display. Alerts displayed on the pilot display are listed in Chapter 8.

- A given system alert may be displayed at all stations simultaneously. Activation of CLEAR ALERT by any one operator will clear a given alert from all displays. Coordination between crewmembers should be exercised prior to clearing of any alert so that the impact of that alert is understood by all crewmembers prior to its being cleared.

1.8.8.3.3 A/C TRACK

PILOT | A/C TRACK | DISPLAY CONTROL

PURPOSE:

Displays the last 15 positions of aircraft track history.

PREREQUISITE:

None.

PROCEDURE:

1. Press A/C TRACK (lights amber).

Note

- Aircraft track history is displayed as a series of symbols located in positions specified by aircraft past positions. A maximum of 15 symbols are displayed, with the oldest symbol being deleted as a new one appears.

- Own aircraft symbol indicates the aircraft's current position. A 1/2-inch vector from the center points in the direction of the aircraft track.

   a. If aircraft track function is active at another station, the following occurs on the pilot display:

      (1) Displays current aircraft track history symbols from any other tactical station.

      (2) Repetition rate will be the same as the activating station's established rate.

   b. If aircraft track function is not active at another station the following occurs:

      (1) Aircraft track symbols are displayed on the pilot display at a 1-minute repetition rate.

DEACTIVATION:

1. A/C TRACK is deactivated when the following occurs:

   a. A/C TRACK is pressed when amber.

2. Deactivation results:

   a. Removal of all aircraft track history symbols.

   b. A/C TRACK changes from amber to green.

1.8.8.3.4 EXTEND TRACK VECTOR

PILOT | EXTEND TRACK VECTOR | DISPLAY CONTROL

PURPOSE:

Extends the vector associated with own aircraft symbol on the pilot display.

PREREQUISITE:

None.

PROCEDURE:

1. Press EXTEND TRACK VECTOR (momentary).
   a. Upon activation, the following occurs:
      (1) The vector associated with own aircraft symbol is increased from its normal length to an extended length.

DEACTIVATION:

1. EXTEND TRACK VECTOR is deactivated if pressed.
2. Deactivation result:
   a. The length of the vector is reduced from extended to the normal.

1.8.8.3.5 ESM T

PILOT | ESM T | DISPLAY CONTROL

PURPOSE:

Automatically provides the pilot with an ESM relative lethality plot.

PREREQUISITE:

1. Receipt of an ESM threat within 1.5 lethal range of the aircraft.

PROCEDURE:

1. ESM T switch initializes in the OFF position and the TAC PLOT is displayed.
2. Press ESM T (toggle).
   a. If TAC PLOT is displayed, ESM relative lethality plot is displayed.
   b. If ESM relative lethality plot is displayed, TAC PLOT is displayed.

DEACTIVATION:

1. ESM T is deactivated when ESM threats are no longer within lethal range.
   a. Redisplays the ESM relative lethality plot after having been previously deactivated.
2. ESM T is deactivated if pressed when relative lethality plot is displayed.
3. Deactivation result:
   a. Display changes to TAC PLOT.

1.8.8.3.6 INCR SCALE

PILOT | INCR SCALE | DISPLAY CONTROL

PURPOSE:

Permits the pilot to increase present display scale from 2 nm to 1,024 nm by multiples of two.

PREREQUISITE:

None.

PROCEDURE:

1. Press INCR SCALE (momentary).
   a. The range scale displayed is increased by a multiple of two each time the INCR SCALE is pressed (2, 4, 8, 16, and so forth).
   b. Scale numerics are displayed in the peripheral readout area of the pilot display.

1.8.8.3.7 SUR CNTCT

PILOT | SUR CNTCT | DISPLAY CONTROL

PURPOSE:

Permits the pilot to display all surface contacts which are visible at the present display scale.

PREREQUISITE:

None.

PROCEDURE:

1. Press SUR CNTCT (lights amber).
   a. Upon activation, all surface contacts within the present display scale are displayed on the pilot display.

Note

If the display scale changes while the function is active, all surface contacts within the new scale are displayed.

DEACTIVATION:

1. SUR CNTCT is deactivated if pressed when amber.
2. Deactivation results:
   a. All surface contact symbols are cleared from the display.
   b. SUR CNTCT changes from amber to green.

1.8.8.3.8 AUTO SCALE

PILOT | AUTO SCALE | DISPLAY CONTROL

PURPOSE:

Automatically causes the pilot display to shift to, and remain on, the lowest possible scale and still present the aircraft symbol. This function is normally used immediately after the RCNTR ON FTP is pressed since during all scale shifts, the geographic position at the center of the display does not change.

PREREQUISITE:

None.

PROCEDURE:

1. Press AUTO SCALE (lights amber).
   a. The pilot display automatically shifts to, and remains on, the lowest possible scale that still includes the aircraft symbol.

DEACTIVATION:

1. AUTO SCALE is deactivated if pressed when amber.
2. Deactivation result:
   a. AUTO SCALE changes from amber to green.

1.8.8.3.9 RCNTR ON A/C

PILOT | RCNTR ON A/C | DISPLAY CONTROL

PURPOSE:

Centers the aircraft symbol on the pilot display.

PREREQUISITE:

None.

PROCEDURE:

1. Press RCNTR ON A/C (momentary).
   a. The display on the pilot display is recentered on the aircraft symbol.

b. If AUTO SCALE is active, the scale will automatically shift to 2 nm.

1.8.8.3.10 RCNTR ON FTP

PILOT | RCNTR ON FTP | DISPLAY CONTROL

PURPOSE:

Positions the highest priority FTP symbol in the center of the pilot display.

PREREQUISITE:

1. FTP entered in the system.

PROCEDURE:

1. Press RCNTR ON FTP (momentary).

   a. The pilot display is recentered on the highest priority FTP.

Note

If the aircraft symbol cannot be displayed on the current scale when recentered, the scale increases until the aircraft symbol can be displayed.

1.8.8.3.11 DECR SCALE

PILOT | DECR SCALE | DISPLAY CONTROL

PURPOSE:

Permits the pilot to decrease his present display, from 1,024 nm to 2 nm by a factor of two.

Note

Scale decreases only to point where the aircraft symbol is still displayed.

PREREQUISITE:

None.

PROCEDURE:

1. Press DECR SCALE (momentary).

   a. The range scale displayed is decreased by a factor of two each time the DECR SCALE is pressed (1,024, 512, 256, 128, and so forth).

   b. Scale numerics are displayed in the peripheral area of the pilot display.

1.9 DATA PROCESSING OPTION SELECT FUNCTIONS

The following matrices contain data processing functions not specifically associated with nonacoustic sensors, navigation, communications, or armament. These matrices are grouped together as DPS matrices. The TACCO and SENSO have the following DPS matrices available with the INCOS tray configured to the TACCO mode:

1. PRGM CONT (program control)
2. REINIT (reinitialize)
3. REDSPL (redisplay)
4. PILOT DSPL (pilot display)
5. TAC AIDS (tactical aids)
6. SEARCH MODE (search mode)

The COTAC has the following DPS matrices available:

1. PGM CTL (program control)
2. RNZ (reinitialize)
3. RE DSP (redisplay)
4. PLT DSP (pilot display)
5. TAC AID (tactical aids)
6. SCH (search mode)
7. CON/PTA (conics/passive tracking algorithm)
8. DIA/ORT (diagnostics/operational readiness test).

1.9.1 PRGM CONT Matrix

TACCO
SENSO
COTAC

PRGM CNT

PURPOSE:

Displays option select function legends associated with PRGM CONT.

PREREQUISITE:

None.

PROCEDURE:

1. Press PRGM CONT (lights amber).

Note

- Program control legend on COTAC INCOS is PGM CTL.
- PGM CTL at COTAC station does not light amber when pressed. Legend goes black and matrix C AMPLFY legend appears.

a. PRGM CONT option select function legends are displayed in the upper half of the TACCO/ SENSO matrix B option select switches.

b. PGM CTL option select function legends at COTAC station are displayed in the upper half of matrix A option select switches.

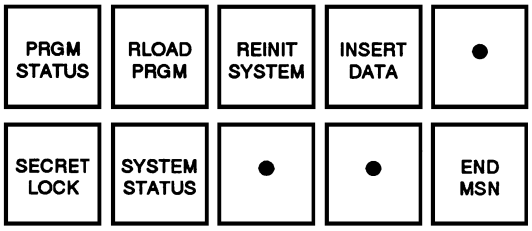

DEACTIVATION:

1. PRGM CONT matrix is deactivated when another matrix select switch is pressed that requires replacing of the option select legends.

2. Deactivation results:

a. PRGM CONT option select function legends are replaced by the option select function legends associated with another matrix select.

b. PRGM CONT matrix switch legend changes from amber to green.

1.9.1.1 PRGM STATUS Option

TACCO
SENSO
COTAC

PRGM CONT

PURPOSE:

Allows the operator to observe the PROGRAM STATUS Tableau. This function is also used to observe subsystems available in a NAV degraded mode which results from GPDC memory failure.

PREREQUISITE:

1. PRGM CONT/PGM CTL matrix is active.

PROCEDURE:

1. Press PRGM STATUS

a. The PROGRAM STATUS Tableau (refer to Chapter 10) is displayed, indicating the current program loaded and degraded mode capability.

DEACTIVATION:

1. PRGM STATUS is deactivated if pressed when amber.

2. Deactivation result:

a. PRGM STATUS changes from amber to green.

1.9.1.2 RLOAD PRGM Option

TACCO
SENSO
COTAC

PRGM CONT

PURPOSE:

Reloads the system and requests, if available, the last block of safe data.

Note

If no memory failures exist and it is necessary to reload the program, program reload should be selected, vice the COMPUTER RESTART switch. This selection will save time by inserting previous responses to load cues that determine preflight data. The program will be loaded to the current program configuration as no attempt will be made to reinitialize failed hardware memory components.

PREREQUISITE:

1. PRGM CONT/PGM CTL matrix is active.

PROCEDURE:

1. Press RLOAD PRGM (lights amber).
   a. The following cue appears:

      SEL VALIDITY
      1 VALID
      2 INVALID

2. Respond to the SEL VALIDITY cue.
   a. If decision 1 is selected, proceed to step 4.
   b. If decision 2 is selected, proceed to step 3.
   c. Press the desired number on the keyset.
3. Press ENTER.
   a. RLOAD PRGM changes from amber to green.
4. Press ENTER.
   a. The following cue appears:

      SEL PROGRAM
      1 OPERATIONAL
      2 OPERATIONAL CONT
      3 SYSTEM TEST
      4 GPDC DIAG RECYCLE

5. Respond to the SEL PROGRAM cue.
   a. If decision 1 is selected, proceed to step 6.
   b. If decision 2 is selected, proceed to step 7.
   c. If decision 3 or 4 is selected, refer to NAVAIR 0l-S3AAB-2-3.1 for maintenance loading procedures.
6. Press ENTER.
   a. A full reload is performed.
7. If decision 2 is selected, the following cue appears:

      LOAD SAFE DATA
      1 YES
      2 NO

   a. If decision 1 is selected, the last set of safe data is loaded.
   b. If decision 2 is selected, preflight data are loaded.
8. Press ENTER.

DEACTIVATION:

1. RLOAD PRGM is deactivated when one of the following occurs:
   a. RLOAD PRGM is pressed when amber.
   b. Selection of INVALID in response to SEL VALIDITY cue.
2. Deactivation result:
   a. RLOAD PRGM changes from amber to green.

1.9.1.3 REINIT SYSTEM Option

TACCO
SENSO
COTAC

PRGM CONT

PURPOSE:

Permits the operator to reinitialize the system.

PREREQUISITE:

1. PRGM CONT/PGM CTL matrix is active.

PROCEDURE:

1. Press REINIT SYSTEM (lights amber).

   a. The following cue appears:

      SEL VALIDITY
      1 VALID
      2 INVALID

2. Respond to the SEL VALIDITY cue.

   a. To reinitialize the system, press 1 on the keyset. Proceed to step 3.

   b. To nullify the REINIT SYSTEM, press 2 on the keyset. Proceed to step 4.

3. Press ENTER.

   a. All subsystems not disabled prior to the reinitalization will be reinitialized.

   b. On-line navigation position is updated from the NCP if the NCP is operating. Lines 3 and 4 of the NAV PREFLIGHT Tableau are updated to the current NCP position. Velocity overrides in the NAV STATUS Tableau will be reactivated.

4. Press ENTER.

   a. The REINIT SYSTEM function is deactivated.

DEACTIVATION:

1. REINIT SYSTEM is deactivated when one of the following occurs:

   a. REINIT SYSTEM is pressed when amber.

   b. Selection of INVALID in response to SEL VALIDITY cue.

2. Deactivation result:

   a. REINIT SYSTEM changes from amber to green.

1.9.1.4 INSERT DATA Option

TACCO
SENSO
COTAC

PRGM CONT

PURPOSE:

Allows the operator to recover or continue a mission by inserting data previously extracted (during a time when the system was operating normally). The system selects the latest block of safe data to insert into the program. If invalid, the other set of safe data are inserted.

Note

- In the event it is necessary to recover information inadvertently destroyed through destroy data function, INSERT DATA option may be used.
- The safe data are read from track 6 of the DMTU and inserted into memory.

PREREQUISITE:

1. PRGM CONT/PGM CTL matrix is active.

PROCEDURE:

1. Press INSERT DATA (lights amber).

   a. The following cue appears:

      SEL VALIDITY
      1 VALID
      2 INVALID

2. Respond to the SEL VALIDITY cue.

   a. If decision 1 is selected, the most recent block of safe data stored on track 6 is inserted into memory.

   b. Following the insertion of safe data, a full system reinitialization occurs.

   c. If decision 2 is selected, no safe data are loaded.

   d. Press the desired number on the keyset.

3. Press ENTER.

DEACTIVATION:

1. INSERT DATA is deactivated if pressed when amber.

2. The operator selects INVALID to the SEL VALIDITY cue.

3. Deactivation result:

   a. INSERT DATA changes from amber to green.

1.9.1.5 SECRET LOCK Option

TACCO
SENSO
COTAC

PRGM CONT

PURPOSE:

Allows the operator to enable restricted functions for the duration of the mission.

PREREQUISITE:

1. PRGM CONT/PGM CTL matrix is active.

PROCEDURE:

1. Press SECRET LOCK (lights amber).

   a. The following cue appears:

      ENT CODE
      ----

2. Respond to the ENT CODE cue.

Note

Entry range is 0 to 9999.

3. Press ENTER.

   a. Restricted functions are made available.

DEACTIVATION:

1. SECRET LOCK is deactivated when one of the following occurs:

   a. SECRET LOCK is pressed when amber.

   b. Termination of the cueing sequence.

2. Deactivation result:

   a. SECRET LOCK changes from amber to green.

1.9.1.6 SYSTEM STATUS Option

TACCO
SENSO
COTAC

PRGM CONT

PURPOSE:

Permits status inspection and modification of each hardware subsystem.

PREREQUISITE:

1. PRGM CONT/PGM CTL matrix is active.

PROCEDURE:

1. Press SYSTEM STATUS (lights amber).

   a. SYSTEM STATUS Tableau is displayed (refer to Chapter 10).

b. The following cue appears:

ENT LINE NUM
XX
Where XX is the suggested entry (first or next modifiable tableau line).

2. Respond to the ENT LINE NUM cue.

a. Operator selects the number on the keyset corresponding to the subsystem to be modified.

3. Press ENTER.

a. The following cue appears:

SUBSYSTEM OPTIONS
1 REINIT
2 DISABLE
3 CARRY-ON

b. If the subsystem selected has an EXPANDED SUBSYSTEM STATUS Tableau, that tableau will be displayed along with the SUBSYSTEMS OPTIONS cue.

4. Respond to the cue.

a. If decision 1 is selected, proceed to step 5.

b. If decision 2 is selected, proceed to step 6.

c. If decision 3 is selected, proceed to step 7.

5. Press ENTER.

a. For systems other than ESM, the selected subsystem is reinitialized.

b. For ESM, the following cue appears:

SEL ESM REINIT
1 REINIT
2 RELOAD-REINIT

If decision 1 is selected, the ESM system is reinitialized. If decision 2 is selected, the ESM software is reloaded from track 7 of TC and the system initialized to initial conditions.

6. Press ENTER.

a. The selected subsystem is prevented from operating on-line.

b. The SYSTEM STATUS Tableau is updated to indicate the subsystem has been disabled.

c. If the disabled subsystem is SESCOS (line 13 on page 2 of the SYSTEM STATUS Tableau), all option select switches in the SEARCH STORES and SCH STR matrices become unavailable (black). In addition, SUS in the KILL STORES and KIL STR matrices also becomes unavailable. Any attempt to CARRY-ON with SESCOS causes the SELECTION UNAVAIL alert to be displayed.

d. If the disabled system is ARMCOS (line 14 on page 2 of SYSTEM STATUS Tableau), all option select switches in the KILL STORES and KIL STR matrices become unavailable (black) and if a weapon FTP has been entered, it is deactivated. Any attempt to CARRY-ON with ARMCOS causes the SELECTION UNAVAIL alert to be displayed.

e. If the disabled subsystem is FLIR (line 19 on page 2 of the SYSTEM STATUS Tableau), all option select switches in the FLIR and FLR matrices become unavailable (black). In addition, the FLIR display is deactivated if the FLIR is disabled while it is being displayed. Any attempt to CARRY-ON with FLIR causes the SELECTION UNAVAIL alert to be displayed.

f. If the disabled subsystem is RIU (line 21 on page 2 of the SYSTEM STATUS Tableau), all option select switches in the RADAR DSPL, RADAR CONT, and RDR matrices become unavailable (black). If the radar is radiating at the time the RIU is disabled, the RADIATION ON alert is displayed. Although the radar display is deactivated, the radiation must be turned off at the OLCU. Any attempt to CARRY-ON with RIU causes the SELECTION UNAVAIL alert to be displayed.

g. If the disabled subsystem is ESM (line 22 on page 2 of the SYSTEM STATUS Tableau), all option select switches in the ESM matrices

become unavailable (black). In addition, the ESM display is deactivated if ESM is disabled while it is being displayed. Any attempt to CARRY-ON with ESM causes the SELECTION UNAVAIL alert to be displayed.

h. Proceed to step 8.

7. Press ENTER.

a. The selected subsystem is allowed to continue on-line operation as though no defect had been reported.

8. Continue.

DEACTIVATION:

1. SYSTEM STATUS is pressed when amber.

2. Deactivation result:

a. SYSTEM STATUS changes from amber to green.

1.9.1.7 END MSN Option

TACCO
SENSO
COTAC

PRGM CONT

PURPOSE:

Prepares the data processing system for shutdown.

PREREQUISITE:

1. PRGM CONT/PGM CTL matrix is active.

PROCEDURE:

1. Press END MSN (lights amber).

a. The following cue appears:

SEL VALIDITY
1 VALID
2 INVALID

This cue allows the operator to (1) confirm the end mission selection or (2) correct an accidental switch activation.

Note

END MSN is required for proper data extraction/mission replay.

2. Respond to the cue.

a. To confirm the END MSN command, press 1 on the keyset. Proceed to step 3.

b. To invalidate the END MSN function, press 2 on the keyset. Proceed to step 4.

3. Press ENTER.

a. The following alert appears at all stations:

ZZZZ END OF MSN

b. Prepares the DPS for shutdown:

(1) Operational program stops processing inputs.

(2) DMTU repositions heads to BOT.

(3) GPDC memory is cleared.

(4) All displays go blank.

4. Press ENTER.

a. The END MSN function is deactivated.

DEACTIVATION:

1. END MSN is deactivated when one of the following occurs:

a. INVALID is selected in response to SEL VALIDITY cue.

b. END MSN is pressed when amber.

2. Deactivation results:

a. END MSN changes from amber to green.

b. Cues and alerts associated with END MSN are removed.

1.9.2 REDSPL Matrix

TACCO
SENSO
COTAC

REDSPL

PURPOSE:

Displays option select function legends associated with REDSPL.

PREREQUISITE:

None.

PROCEDURE:

1. Press REDSPL (lights amber).

Note

- Redisplay legend on COTAC INCOS is REDSP.
- REDSP at COTAC station does not light amber when pressed. Legend goes black and matrix C DSTRY DATA legend appears.
- LOFAR CNTCT, DIFAR CNTCT, ACTIVE CNTCT, and SONB are blacklit and no longer available.

   a. REDSPL option select function legends are displayed in the upper half of the TACCO matrix A select switches.

   b. REDSP option select function legends at COTAC station are displayed in the lower half of matrix B option select switches.

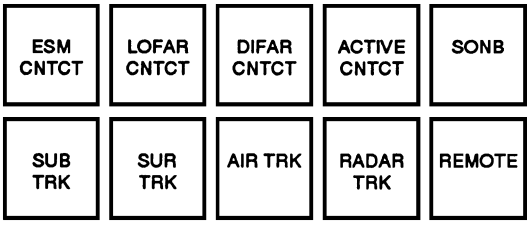

DEACTIVATION:

1. REDSPL matrix is deactivated when another matrix select switch is pressed that requires replacing of the option select legends.
2. Deactivation results:

   a. REDSPL option select function legends are replaced by option select function legends associated with another matrix select.

   b. REDSPL matrix switch legend changes from amber to green.

Note

- Pressing any of the REDSPL function switches, when green, causes the respective switch to change from green to amber, and the previously cleared contact, symbol, track, or fix associated with the activated function is redisplayed on the MPD.
- Pressing any of the REDSPL function switches, when amber, causes the respective function to deactivate, and the switch changes from amber to green. All redisplayed contacts, symbols, tracks, or fixes displayed are removed from the MPD.
- Any local or remote contact, symbol, track, or fix may be retained, if desired, by the RETAIN SYMBOL function.

1.9.2.1 ESM CNTCT Option

TACCO
SENSO
COTAC

REDSPL

PURPOSE:

Redisplays all ESM contacts previously cleared from the TAC PLOT.

PREREQUISITE:

1. REDSPL matrix is active.

PROCEDURE:

1. Press ESM CNTCT (lights amber).

   a. All previously cleared ESM contacts are redisplayed.

DEACTIVATION:

1. ESM CNTCT is deactivated if pressed when amber.

2. Deactivation results:

   a. All redisplayed ESM contacts are removed, except symbols selected for retention by the RETAIN SYMBOL function.

   b. ESM CNTCT changes from amber to green.

1.9.2.2 RADAR TRK Option

TACCO
SENSO
COTAC

REDSPL

PURPOSE:

Redisplays all radar subsystem track symbols on the TAC PLOT.

PREREQUISITE:

1. REDSPL matrix is active.

PROCEDURE:

1. Press RADAR TRK (lights amber).

2. Deactivate CLEAR TAC PLOT if RADAR TRK was active at the time of CLEAR TAC PLOT activation.

   a. The following cue appears:

      SEL CATEGORY
      1 FRIENDLY
      2 UNKNOWN
      3 HOSTILE
      4 ALL

   b. Respond to the cue to display the desired category of radar subsystem tracks.

   c. Further selections cause radar subsystem tracks of the selected types to be displayed in addition to those previously displayed.

Note

The SEL CATEGORY cue appears when the requesting operator is in radar PPI or radar PPI/B-scan display mode. When in TAC PLOT display mode, the cue is not presented and ALL is automatically selected for display.

DEACTIVATION:

1. RADAR TRK is deactivated if pressed when amber.

2. Deactivation results:

   a. All redisplayed radar tracks are removed, except symbols selected for retention by the RETAIN SYMBOL function.

   b. RADAR TRK changes from amber to green.

1.9.2.3 SUB TRK Option

TACCO
SENSO
COTAC

REDSPL

PURPOSE:

Redisplays all subsurface and unknown tracks on the TAC PLOT.

Redisplays all subsurface and unknown fixes not associated with cleared tracks on the TAC PLOT.

PREREQUISITE:

1. REDSPL matrix is active.

PROCEDURE:

1. Press SUB TRK (lights amber).

   a. All subsurface and unknown tracks are redisplayed.

   b. All subsurface and unknown fixes not associated with cleared tracks are redisplayed.

DEACTIVATION:

1. SUB TRK is deactivated if pressed when amber.

2. Deactivation results:

   a. All redisplayed subsurface and unknown tracks and fixes are removed, except symbols selected for retention by the RETAIN SYMBOL function.

   b. SUB TRK changes from amber to green.

1.9.2.4 SUR TRK Option

TACCO
SENSO
COTAC

REDSPL

PURPOSE:

1. Redisplays all surface tracks on the TAC PLOT.

2. Redisplays all surface fixes not associated with tracks previously cleared from the TAC PLOT.

PREREQUISITE:

1. REDSPL matrix is active.

PROCEDURE:

1. Press SUR TRK (lights amber).

   a. All surface tracks are redisplayed.

   b. All surface fixes not associated with previously cleared tracks are redisplayed, including PDIP surface fixes.

DEACTIVATION:

1. SUR TRK is deactivated if pressed when amber.

2. Deactivation results:

   a. All redisplayed surface tracks and fixes are removed, except symbols selected for retention by the RETAIN SYMBOL function.

   b. SUR TRK changes from amber to green.

1.9.2.5 AIR TRK Option

TACCO
SENSO
COTAC

REDSPL

PURPOSE:

1. Redisplays all airborne tracks on the TAC PLOT.

2. Redisplays all airborne fixes not associated with tracks previously cleared from the TAC PLOT.

PREREQUISITE:

1. REDSPL matrix is active.

PROCEDURE:

1. Press AIR TRK (lights amber).

   a. All airborne tracks are redisplayed.

   b. All airborne fixes not associated with cleared tracks are redisplayed.

DEACTIVATION:

1. AIR TRK is deactivated if pressed when amber.

2. Deactivation results:

   a. All redisplayed airborne tracks and fixes are removed, except symbols selected for retention by the RETAIN SYMBOL function.

   b. AIR TRK changes from amber to green.

1.9.2.6 REMOTE Option

TACCO
SENSO
COTAC

REDSPL

PURPOSE:

Redisplays all remote data-link contacts previously cleared from the TAC PLOT.

PREREQUISITE:

1. REDSPL matrix is active.

PROCEDURE:

1. Press REMOTE (lights amber).

   a. The following cue appears:

   SEL REMOTE TYPE
   1 TRACKS
   2 SONBS
   3 SPCL POINTS
   4 CONTIN PREDS
   5 DATUMS
   OPTNL

2. Respond to the cue.

   a. If the operator chooses to skip the cue, press SKIP CUE or TERM CUE SEQ. Function deactivates.

   b. If the operator chooses to display nondisplayed symbols, press the desired number (1 through 5) on keyset, then proceed to step 3.

3. Press ENTER.

   a. Nondisplayed remote symbols of the type selected in the SEL REMOTE TYPE cue are displayed until all such symbols of the type selected are displayed or until display capacity is reached.

   b. The SEL REMOTE TYPE cue is redisplayed.

   c. Repeat steps 2 and 3 until all desired symbols are displayed.

DEACTIVATION:

1. REMOTE is deactivated if pressed when amber, or if SKIP CUE or TERM CUE SEQ is pressed.

2. Deactivation results:

   a. All redisplayed remote data-link contacts are removed, except symbols selected for retention by the RETAIN SYMBOL function.

   b. REMOTE changes from amber to green.

1.9.3 SEARCH MODE Matrix

TACCO
SENSO
COTAC

SEARCH
MODE

PURPOSE:

Displays option select function legends associated with the SEARCH MODE matrix.

PREREQUISITE:

None.

PROCEDURE:

1. Press SEARCH MODE (lights amber).

Note

- SEARCH MODE legend on COTAC INCOS is SCH.
- SCH at COTAC station does not light amber when pressed. Legend goes black and matrix C VECTOR legend appears.

   a. SEARCH MODE option select function legends are displayed in the upper half of the TACCO matrix A option select switches.

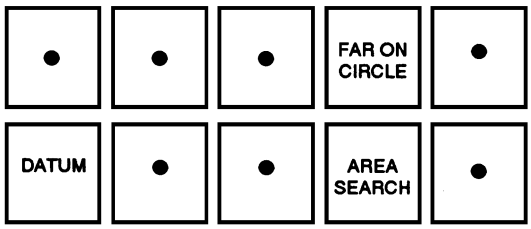

   b. SCH option select function legends at COTAC station are displayed in the lower half of matrix B option select switches.

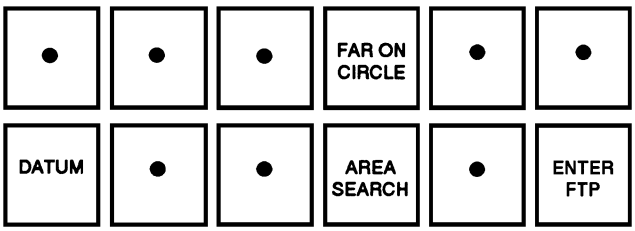

Note

COTAC ENTER FTP option is the same as the ENTER FTP function discussed under TACCO/SENSO display control functions.

DEACTIVATION:

1. SEARCH MODE/SCH is deactivated when another matrix select switch is pressed that requires replacing of the option select legends.

2. Deactivation results:

   a. SEARCH MODE/SCH option select function legends are replaced by option select function legends associated with another matrix select.

   b. SEARCH MODE/SCH option select function legends are replaced by option select function legends associated with another matrix select.

1.9.3.1 FAR ON CIRCLE Option

TACCO
SENSO
COTAC

SEARCH
MODE

PURPOSE:

Displays a circle about a hooked point having a radius equal to the maximum distance the target could have traveled by the time the aircraft reaches the hooked point.

PREREQUISITE:

1. SEARCH MODE/SCH matrix is active.

2. TAC PLOT display is active.

3. A hooked position.

PROCEDURE:

1. Press FAR ON CIRCLE (lights amber).

   a. If the hooked position does not have an associated time, the following cue appears:

      ENT TIME-ZULU
      XXXX

Note

The suggested entry is the time FAR ON CIRCLE was pressed.

   b. If the hooked position has an associated time, proceed to step 3a.

2. Respond to the ENT TIME-ZULU cue.

   a. Enter the time the target was at the hooked position.

The entered time cannot be earlier than the restart time.

3. Press ENTER.

   a. The following cue appears:

      ENT SPEED-KTS
      --

4. Respond to the ENT SPEED-KTS cue.

   a. Enter the speed of the target.

5. Press ENTER.

   a. A circle is displayed, the radius of which indicates the maximum distance the target could travel by the time the aircraft reaches the hooked point.

Note

If the aircraft deviates from the initial calculated speed or heading en route to the hooked point, the FAR ON CIRCLE switch should be reselected.

DEACTIVATION:

1. FAR ON CIRCLE is deactivated when one of the following occurs:

   a. FAR ON CIRCLE is pressed when amber.

2. Deactivation results:

   a. Displayed circle is removed.

   b. FAR ON CIRCLE changes from amber to green.

1.9.3.2 DATUM Option

TACCO
SENSO
COTAC

SEARCH
MODE

PURPOSE:

Allows the operator to enter a datum with selected parameters into the system at a hooked point.

Note

- Only subsurface datums can be assigned for transmission on the Link 11 net through the ASSEM REPORT function.
- No AMPLIFY Tableau is available when AMPLFY option is used on a datum. Only the designation time is available as AMPLFY data, displayed beneath the local track number.

PREREQUISITES:

1. SEARCH MODE matrix is active.
2. HOOK VERIFY a point on the TAC PLOT.

PROCEDURE:

1. Press DATUM (lights amber).
   a. The next unused local track number is assigned the datum.
   b. The following cue appears:

```
SEL CAT-ID
1 AIR   F   6 SUB   H
2 SURF  F   7 AIR   U
3 SUB   F   8 SURF  U
4 AIR   H   9 SUB   U
5 SURF  H
```

2. Respond to the SEL CAT-ID cue (local).
   a. If cue decision 1, 4, 5, or 7 is selected, proceed to step 15.
   b. If decision 2 is selected, proceed to step 13.
   c. If cue decision 3, 6, or 9 is selected, proceed to step 3.
   d. If decision 8 is selected, proceed to step 11.
3. Press ENTER.
   a. The following cue appears:

```
SURFACED SUB
1 YES
2 NO
```

4. Respond to the SURFACED SUB cue.
   a. If decision 1 is selected, proceed to step 5.
   b. If decision 2 is selected, proceed to step 6.
   c. A skip cue or term cue sequence response shall assume no to the cue.
5. Press ENTER.
   a. The following cue appears:

```
SEL SUBSURF CLASS
1 NO STATEMENT
2 POSSIBLE SUB
3 PROBABLE SUB
4 CERTAIN SUB
5 NON SUB  OPTNL
```

6. Respond to the SEL SUBSURF CLASS cue.
   a. If cue decision 1 or 5 is selected, proceed to step 15.
   b. If decision 2 is selected, proceed to step 7.
   c. If cue decision 3 or 4 is selected, proceed to step 9.
7. Press ENTER.
   a. The following cue appears:

```
ENT CONF LEVEL
1-4
```

8. Respond to the ENT CONF LEVEL cue.

9. Press ENTER.

   a. The following cue appears:

      SEL CLASS AMP
      1 PROPULSION UNK
      2 PROPULSION CON
      3 PROPULSION NUC
      OPTNL

10. Respond to the SEL CLASS AMP cue.

    a. Proceed to step 15.

11. Press ENTER.

    a. The following cue appears:

       SEL PRI ID AMP
       1 EVALUATED UNK
       2 ASSUMED FRIEND
       3 ASSUMED HOST

12. Respond to the SEL PRI ID AMP cue.

    a. Press 1, 2, or 3 on the keyset.

13. Press ENTER.

    a. The following cue appears:

       SEL PRI ID AMP
       1 CONFIRMED FRIEND
       2 AUXILIARY
       3 SPECIAL MISSION
       4 AMPHIBIOUS
       5 LINE

14. Respond to the SEL PRI ID AMP cue.

    a. Press 1, 2, 3, 4, or 5 on the keyset.

15. Press ENTER.

    a. The parameters of the hooked track fixes or datum are modified.

    b. Function deactivates.

Note

When a SKIP CUE option is available and selected for the SEL CAT-ID, and related cues, the parameter previously assigned to the track remains unchanged.

DEACTIVATION:

1. DATUM is deactivated when one of the following occurs:

   a. DATUM is pressed when amber.

   b. A datum is entered into the system at the hooked point.

   c. Changing from a tactical to a nontactical display mode when a cue is displayed.

2. Deactivation result:

   a. DATUM changes from amber to green.

1.9.3.3 AREA SEARCH Option

TACCO
SENSO
COTAC

SEARCH
MODE

PURPOSE:

Provides capability to utilize the radar update tracks function to search the area about a designated point or contact bearing line.

PREREQUISITES:

1. SEARCH MODE/SCH matrix is active.

2. Radar operating with surface search mode active. Range scale is greater than 16 nm.

3. Hook a valid designated point or contact bearing line.

4. Display mode must be TAC PLOT.

PROCEDURE:

1. If a bearing line was hooked:

   a. Press AREA SEARCH (lights amber).

b. The following alert is displayed:

AREA SEARCH COMPLETE

c. An area search symbol is displayed corresponding to radar contact locations.

d. A maximum of eight area search symbols can be displayed.

e. Data will remain on TAC PLOT for 60 seconds.

2. If a geographic position was hooked:

a. Press AREA SEARCH (lights amber).

(1) The following cue appears:

ENT RADIUS-NM

Entry range 0 through 13.

b. Respond to the ENT RADIUS — NM cue.

(1) Press numerics on the keyset to select the desired RADIUS — NM.

c. Press ENTER.

(1) The following alert is displayed:

AREA SEARCH COMPLETE

(2) An area search symbol is displayed corresponding to radar contact locations.

(3) A maximum of eight area search symbols can be displayed.

(4) Data will remain on TAC PLOT for 60 seconds.

DEACTIVATION:

1. AREA SEARCH is deactivated when one of the following occurs:

a. AREA SEARCH is pressed when amber.

b. Deactivation of radar surface search display mode or continuous scan subfunction at the radar controlling operator's station.

c. If the following alert is displayed:

AREA SEARCH UNAVAILABLE

(1) An AREA SEARCH UNAVAILABLE alert is displayed when the selected radius is outside the selected radar range scale.

d. Activation of another function requiring the cueing area.

2. Deactivation results:

a. Cues associated with AREA SEARCH are removed.

b. AREA SEARCH changes from amber to green.

1.9.4 TAC AIDS Matrix

TACCO
SENSO
COTAC

TAC AIDS

PURPOSE:

Displays option select function legends associated with the TAC AIDS mode.

PREREQUISITE:

None.

PROCEDURE:

1. Press TAC AIDS (lights amber).

Note

TAC AIDS at the COTAC station does not light amber when pressed. The legend goes black and the matrix C CLR TAC PLOT legend appears.

a. TAC AIDS option select function legends are displayed in the upper half of the TACCO matrix B option select switches.

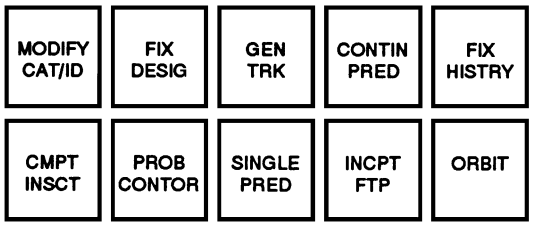

b. TAC AIDS option select function legends at COTAC station are displayed in the lower half of matrix B option select switches.

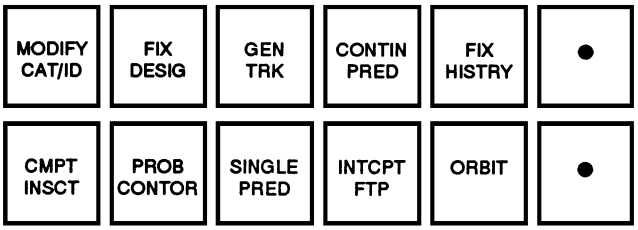

DEACTIVATION:

1. TAC AIDS matrix is deactivated when another matrix select switch is pressed that requires replacing of the option select legends.

2. Deactivation results:

   a. TAC AIDS option select function legends are replaced by option select function legends associated with another matrix select.

   b. TAC AIDS matrix switch legend changes from amber to green.

1.9.4.1 MODIFY CAT/ID (Modify Category/ID) Option

TACCO
SENSO
COTAC

TAC AIDS

PURPOSE:

Allows modification of the local track number, category, identity, subsurface class, class amplification, and/or primary identification for any local track fix, or fix history. MODIFY CAT/ID also allows the operator to modify (update) remote tracks (air or surface) regarding category, identity, and primary identity amplification.

PREREQUISITES:

1. TAC AIDS matrix is active.

2. HOOK VERIFY a lost contact, local fix or track, or fix history, or remote air, or surface track.

PROCEDURE:

1. Press MODIFY/CAT/ID (lights amber).

   a. If the operator has hooked a lost contact or a local subsurface track, the following cue appears:

      LOST CONTACT
      1 YES
      2 NO

      (1) Proceed to step 3.

   b. If the operator has hooked a local subsurface fix, local surface or track, local air fix or track, the following cue appears:

      ENT LOCAL TN
      XXXX

      (1) Proceed to step 2.

   c. If the operator has hooked a fix history associated with GEN TRACK, the following cue appears:

      ENT LOCAL TN
      XXXX

      (1) Proceed to step 2.

   d. If the operator has hooked a remote air or surface track, the following cue appears:

      SEL CAT-ID
      1 SURF FRIEND
      2 SURF HOSTILE
      3 SURF UNKNOWN
      OPTNL

      (1) Proceed to step 7.

2. Respond to the ENT LOCAL TN cue.

a. If a TN is entered that is associated with another track, proceed to step 21.

Note

Upon entry of a TN associated with another track, the FIX HISTORY is removed from the display. The new track will be modified to include the fix, and the function is terminated. The updated GEN TRACK course and speed data will reflect the modification.

3. Respond to the LOST CONTACT cue.

   a. If cue decision 1 (YES) is selected, the hooked contact is modified to a lost contact. Proceed to step 20.

   b. If cue decision 2 (NO) is selected, the ENT LOCAL TN cue appears upon completion of step 4.

   c. Press 1 or 2 on the keyset.

4. Press ENTER.

5. Respond to the ENTER LOCAL TN cue.

   a. If suggested entry is accepted, proceed to step 6.

   b. If suggested entry is not accepted, press the desired numbers on the keyset.

6. Press ENTER.

   a. The following cue appears:

SEL CAT-ID					
1	AIR	F	6	SUB	H
2	SURF	F	7	AIR	U
3	SUB	F	8	SURF	U
4	AIR	H	9	SUB	U
5	SURF	H			

   (1) Proceed to step 7.

7. Respond to the SEL CAT-ID cue (remote tracks).

   a. If cue decision 1, 2, 3, 4, 5, 6, 7, or 9 is selected, proceed to step 21.

   b. If decision 8 is selected, proceed to step 17.

Note

An operator response of SKIP CUE causes the function to perform one of the following responses:

1. Omit remaining cueing sequence if the hooked symbol was an air track or a hostile surface track.

2. Display the SEL PRI ID AMP cue for friendly contacts (step 19a) if the hooked symbol is a friendly surface track.

3. Display the SEL PRI ID AMP cue for unknown contacts (step 17a) if the hooked symbol is an unknown surface track.

8. Respond to the SEL CAT-ID cue (local).

   a. If cue decision 1, 4, 5, or 7 is selected, proceed to step 21.

   b. If decision 2 is selected, proceed to step 10.

   c. If cue decision 3, 6, or 9 is selected, proceed to step 9.

   d. If decision 8 is selected, proceed to step 17.

Note

An operator response of SKIP CUE causes the function to perform one of the following responses:

1. Omit remaining cueing sequence if the hooked symbol was an air track or a hostile surface track or fix.

2. Display the SEL PRI ID AMP cue for friendly contacts (step 19a) if the hooked symbol is a friendly surface track or fix.

3. Display the SEL PRI ID AMP cue for unknown contacts (step 17a) if the hooked symbol is an unknown surface track or fix.

4. Display the SEL SUBSURF CLASS cue for subsurface contacts (step 11a) if the hooked symbol is a subsurface track or fix.

9. Press ENTER.

   a. The following cue appears:

      SURFACED SUB
      1 YES
      2 NO

10. Respond to the SURFACED SUB cue.

    a. If decision 1 is selected, proceed to step 15.

    b. If decision 2 is selected, proceed to step 11.

    c. A skip cue or term cue response shall assume NO to the cue.

11. Press ENTER.

    a. The following cue appears:

       SEL SUBSURF CLASS
       1 NO STATEMENT
       2 POSSIBLE SUB
       3 PROBABLE SUB
       4 CERTAIN SUB
       5 NON SUB
                OPTNL

12. Respond to the SEL SUBSURF CLASS cue.

    a. If cue decision 1 or 5 is selected, proceed to step 21.

    b. If decision 2 is selected, proceed to step 13.

    c. If cue decision 3 or 4 is selected, proceed to step 15.

13. Press ENTER.

    a. The following cue appears:

       ENT CONF LEVEL 1-4

14. Respond to the ENT CONF LEVEL cue.

15. Press ENTER.

    a. The following cue appears:

       SEL CLASS AMP
       1 PROPULSION UNK
       2 PROPULSION CON
       3 PROPULSION NUC
                OPTNL

16. Respond to the SEL CLASS AMP cue.

    a. Proceed to step 21.

17. Press ENTER.

    a. The following cue appears:

       SEL PRI ID AMP
       1 EVALUATED UNK
       2 ASSUMED FRIEND
       3 ASSUMED HOST

18. Respond to the SEL PRI ID AMP cue.

    a. Press 1, 2, or 3 on the keyset. Proceed to step 21.

19. Press ENTER.

    a. The following cue appears:

       SEL PRI ID AMP
       1 CONFIRMED FRIEND
       2 AUXILIARY
       3 SPECIAL MISSION
       4 AMPHIBIOUS
       5 LINE
                OPTNL

20. Respond to the SEL PRI ID CAMP cue.

    a. Press 1, 2, 3, 4, or 5 on the keyset.

21. Press ENTER.

    a. The parameters of the hooked track fixes or datum are modified.

    b. Function deactivates.

Note

When a SKIP CUE option is available and selected for the SEL CAT ID, the parameter previously assigned to the track remains unchanged.

DEACTIVATION:

1. The MODIFY CAT/ID function is deactivated when one of the following occurs:

   a. Cueing sequence is complete.

   b. MODIFY CAT/ID is pressed when amber.

2. Deactivation results:

   a. Cues associated with MODIFY CAT/ID function are removed.

   b. MODIFY CAT/ID changes from amber to green.

1.9.4.2 FIX DESIG Option

TACCO
SENSO
COTAC

TAC AIDS

PURPOSE:

Allows the operator to designate any hooked position as a fix and assign a track number, category, and identification to the fix.

PREREQUISITES:

1. TAC AIDS matrix is active.

2. A fix position has been designated.

PROCEDURE:

1. Press FIX DESIG (lights amber).

   a. The following cue appears:

   ENT LOCAL TN
   XXXX

2. Respond to the ENT LOCAL TN cue.

   a. If the suggested entry is selected, proceed to step 3.

   b. If a track number is to be entered other than the suggested entry, press numerics on the keyset.

3. Press ENTER.

   a. If the entered track number was not previously assigned, the following cue appears:

   SEL CAT-ID

1	AIR	F	6	SUB	H
2	SURF	F	7	AIR	U
3	SUB	F	8	SURF	U
4	AIR	H	9	SUB	U
5	SURF	H			

   b. If the entered track number was previously assigned, the SEL CAT-ID cue does not appear. The fix is automatically assigned the same CAT-ID as the existing item with that track number. Proceed to step 17b.

4. Respond to the SEL CAT-ID cue.

   a. Press a numeric on the keyset to classify the target-method of travel and identification.

   b. If cue decision 1, 4, 5, or 7 is selected, proceed to step 17.

   c. If cue decision 2 (SURF F) is selected, proceed to step 15.

   d. If cue decision 3, 6, or 9 is selected, proceed to step 5.

   e. If decision 8 is selected, proceed to step 13.

5. Press ENTER.

   a. The following cue appears:

   SURFACED SUB
   1 YES
   2 NO

6. Respond to the SURFACED SUB cue.

   a. If decision 1 is selected, proceed to step 11.

   b. If decision 2 is selected, proceed to step 7.

   c. A skip cue or term cue sequence response shall assume NO to the cue.

7. Press ENTER.

   a. The following cue appears:

   SEL SUBSURF CLASS
   1 NO STATEMENT
   2 POSSIBLE SUB
   3 PROBABLE SUB
   4 CERTAIN SUB
   5 NON SUB

8. Respond to the SEL SUBSURF CLASS cue.

   a. If cue decision 1 or 5 is selected, proceed to step 17.

   b. If decision 2 is selected, proceed to step 9.

   c. If cue decision 3 or 4 is selected, proceed to step 11.

9. Press ENTER.

   a. The following cue appears:

   ENT CONF LEVEL 1-4

10. Respond to the ENT CONF LEVEL cue.

11. Press ENTER.

   a. The following cue appears:

   SEL CLASS AMP
   1 PROPULSION UNK
   2 PROPULSION CON
   3 PROPULSION NUC

12. Respond to the SEL CLASS AMP cue.

   a. Press 1, 2, or 3 on the keyset. Proceed to step 17.

13. Press ENTER.

   a. The following cue appears:

   SEL PRI ID AMP
   1 EVALUATED UNK
   2 ASSUMED FRIEND
   3 ASSUMED HOST

14. Respond to SEL PRI ID AMP cue.

   a. Press 1, 2, or 3 on the keyset. Proceed to step 17.

15. Press ENTER.

   a. The following cue appears:

   SEL PRI ID AMP
   1 CONFIRMED FRIEND
   2 AUXILIARY
   3 SPECIAL MISSION
   4 AMPHIBIOUS
   5 LINE
   OPTNL

16. Respond to SEL PRI ID AMP cue.

   a. Press the desired number on the keyset.

17. Press ENTER.

   a. The new primary identity amplification is recorded.

   b. The following cue appears:

   ENT TIME-ZULU

Note

The entered time can be up to ±9 hours from the computer restart time. Should an earlier time be entered, a negative DR will be computed.

18. Respond to the ENT TIME-ZULU cue.

   a. If suggested entry is accepted, proceed to step 19.

   b. If suggested entry is not accepted, press the desired numbers on the keyset.

19. Press ENTER.

   a. The following cue appears:

   SEL FIX CNFDNC
   1 GOOD
   2 POOR

20. Respond to the SEL FIX CNFDNC cue.

   a. Press 1 or 2 on the keyset. Proceed to step 21.

21. Press ENTER.

    a. The following cue appears:

    ENT UNCERTNY-YDS
    XXXXX

Note

- XXXXX represents entry range of 200 through 64,000 yards.
- Suggested entry is 500 yards.
- The 1-sigma uncertainty values used by the program for fixes generated by various sensors, available in the Tactical Manual, NAVAIR 01-S3AAB-1T, should be considered when assigning an uncertainty value to a FIX DESIG.

    b. If suggested entry is accepted, proceed to step 22.

    c. If suggested entry is not accepted, press the desired numbers on the keyset.

22. Press ENTER.

    a. The appropriate fix symbology is displayed at the designated position.

DEACTIVATION:

1. FIX DESIG is deactivated when one of the following occurs:

    a. FIX DESIG is pressed when amber.

    b. Activation of another function when a cue is displayed.

    c. Changing from a tactical to a nontactical display mode, if active while a cue is displayed.

2. Deactivation results:

    a. Cues associated with FIX DESIG function are removed.

    b. FIX DESIG changes from amber to green.

1.9.4.3 GEN TRK Option

TACCO
SENSO
COTAC

TAC AIDS

PURPOSE:

Correlates two or more allowable fixes with the same track number into a single updating DR contact with an associated track. Generates a DR track for a single fix with operator entered course and speed.

Note

- The generated track may have an erroneous position, course, or velocity if the times of the fixes from which a track is generated are closer than 30 seconds apart or are entered before performing MARK TIME. These errors may also occur if the X and Y velocity components of a generated track exceed 512 knots.
- A maneuvering contact will require the operator to constantly modify past contact fixes to ensure an accurate GEN TRK.
- For highly evasive contacts use of CONTIN PRED vice GEN TRK is recommended.

PREREQUISITES:

1. TAC AIDS matrix is active.
2. A fix symbol is hooked.

PROCEDURE:

1. Press GEN TRK (lights amber).

    a. A track is generated and displayed from all available fixes having the same track number as the hooked fix.

    b. All fixes with the same track number are cleared from the MPD.

    c. GEN TRK changes from amber to green.

DEACTIVATION:

1. GEN TRK is deactivated if pressed when amber.
2. Deactivation result:
   a. GEN TRK changes from amber to green.

1.9.4.4 GEN TRK Option (Single Fix)

1. TAC AIDS matrix is active.
2. A fix symbol is hooked.

PROCEDURE:

1. Press GEN TRK.
   a. The following alert appears:

      ENT COURSE-DEG
      ---

2. Press ENTER.
   a. The following alert appears:

      SEL COURSE CONFDNC
      1 GOOD
      2 POOR

3. Press ENTER.
   a. The following alert appears:

      ENT SPEED-KTS
      --

4. Press ENTER.
   a. The following cue appears:

      SEL SPEED CNFDNC
      1 GOOD
      2 POOR

5. Press ENTER.
   a. A track is generated.

DEACTIVATION:

1. GEN TRK is deactivated if pressed when amber.
2. Deactivation result:
   a. GEN TRK changes from amber to green.

1.9.4.5 CONTIN PRED Option

TACCO
SENSO
COTAC

TAC AIDS

PURPOSE:

Generates and displays the predicted current position of a fix.

PREREQUISITES:

1. TAC AIDS matrix is active.
2. A fix, fix history, or nonreal-time remote track symbol is hooked.

PROCEDURE:

1. Press CONTIN PRED (lights amber).
   a. If the hooked symbol is a nonreal-time remote track, and does not have a zero velocity, a CPP symbol, based upon the remote track location and time, is displayed on the operator's MPD.

Note

A remote track CPP symbol is identified with the letters PK.

   b. If the hooked symbol is a local fix or fix history, the following cue appears:

      SEL NUM OF FIXES
      1 1
      2 2

2. Respond to the cue.
   a. If decision 1 is selected, proceed to step 3.
   b. If decision 2 is selected, proceed to step 9.
3. Press number 1 on the keyset.

4. Press ENTER.

   a. The following cue appears:

      ENT COURSE-DEG
      ---

5. Respond to the cue.

   a. Press numbers on the keyset to enter an estimated target course in degrees (0 to 359).

6. Press ENTER.

   a. The following cue appears:

      ENT SPEED-KTS
      --

7. Respond to the cue.

   a. Enter an estimated target speed on the keyset (0 to 99).

8. Press ENTER.

   a. The CPP symbol is displayed at the current predicted position of the fix on the MPD.

Note

The CPP symbol is displayed only on the selecting operator's MPD.

   b. Track number and estimated speed is displayed with the symbol as amplifying information.

   c. The position of the symbol and its amplifying information is updated every 5 seconds.

   d. CONTIN PRED remains amber.

9. Press number 2 on the keyset.

10. Press ENTER.

    a. The following cue appears:

       HOOK SECOND SYMBOL

11. Respond to the cue.

    a. Position hook over the second fix.

12. Press HOOK VERIFY.

    a. The CPP symbol is displayed at the current predicted position of the fix on the operator's MPD.

    b. Track number (of the latest fix, if two fixes were hooked) and estimated speed is displayed with the symbol as amplifying information.

    c. The position of the symbol and its amplifying information is updated every 5 seconds.

    d. CONTIN PRED remains amber.

DEACTIVATION:

1. CONT PRED is deactivated if pressed when amber.

2. Deactivation results:

   a. The symbol associated with CONTIN PRED function is removed.

   b. CONTIN PRED changes from amber to green.

1.9.4.6 FIX HISTRY Option

TACCO
SENSO
COTAC

TAC AIDS

PURPOSE:

Redisplays fix history symbols associated with a track number.

PREREQUISITES:

1. TAC AIDS matrix is active.

2. A track symbol is hooked.

PROCEDURE:

1. Press FIX HISTRY (lights amber).

   a. If no alert appears:

      (1) Fix history symbols of all fixes associated with the hooked track are displayed.

Note

Fix history symbols differ from standard fix symbols in that fix history symbols do not have a track number displayed with them.

DEACTIVATION:

1. FIX HISTRY is deactivated if pressed when amber.

2. Deactivation results:

   a. Fix history symbols are erased.

   b. FIX HISTRY changes from amber to green.

1.9.4.7 CMPT INTSCT Option

TACCO
SENSO
COTAC

TAC AIDS

PURPOSE:

Generates and displays a fix, using the computed intersection of conics generated by two contacts from the same target.

PREREQUISITES:

1. TAC AIDS matrix is active.

2. Two contacts from the following pairs of sensors:

   a. ESM/ESM (different sources)

   b. Remote bearing/remote bearing

   c. ESM/remote bearing

   d. ESM triangulation (two bearings from the same source at two different times).

Note

- The initial ESM bearing is displayed by hooking the ESM contact, activating CMPT INTSCT, and hooking the contact again in response to the HOOK SECOND CONIC cue. The function then computes the intersection of the ESM contact and the initial ESM bearing.
- The initial ESM bearing is defined as the bearing at the time of the last computed intersection, if available. Otherwise, it is the bearing of the original emitter bearing detected by ESM.

3. An allowable local or remote conic symbol generated by ESM is hooked.

Note

The bearing/bearing compute intersection algorithm may result in invalid mirror image fixing.

PROCEDURE:

1. Press CMPT INTSCT (lights amber).

   a. The following cue appears:

      HOOK SECOND CONIC

2. Respond to the HOOK SECOND CONIC cue.

   a. Place the hook on the second allowable conic symbol.

3. Press HOOK VERIFY.

4. Press ENTER.

   a. The intersection is computed, a fix reference mark is displayed and the ENT LOCAL TN cue appears. Proceed to step 6.

   b. If no alert appears, a reference mark is displayed at each intersection point of the hooked pair of contacts. A number 1 appears inside of one reference mark and a number 2 appears in the other reference mark (if a second intersection exists).

Note

When the two conics intersect at only one point, a reference mark without a number appears at that point only.

c. If the following alert appears:

FIX UNRELIABLE

(1) The contact hooked in response to the HOOK SECOND CONIC cue differs more than 10 minutes from the initial hooked contact.

Note

- If the earlier contact has no bearing rate of change or no range rate of change, the time of intersection is the average of the two contact times.
- If the earlier contact has a bearing or range rate of change, its contact time is compensated for time-late error with the values associated with the contact that are in memory. In this case, the time of intersection is established as the most current of the two contacts used.

(2) The normal cueing sequence continues unaffected.

Note

The only procedure to update an ESM baseline bearing if the FIX UNRELIABLE alert is displayed is to complete the cueing sequence, then destroy the fix if it is inaccurate.

d. The following alert appears:

NO INTERSECTION

(1) If two range circle contacts are displayed, the circles do not intersect or the sensors generating the contacts are less than 200 yards apart.

(2) If two bearing line contacts are displayed, the two lines fail to intersect, or the angle of intersection is less than 15, or the point of intersection is more than 200 nm from any one of the sensors generating the bearing line.

(3) The NO INTERSECTION alert causes the function to deactivate.

5. If two reference marks are displayed, the following cue appears:

SEL AMBIG INTSCTN
1 REF 1 AMBIG
2 REF 2 AMBIG
OPTNL

a. The reference mark selected will be destroyed from the display leaving only one fix.

(1) Press 1 or 2 on the keyset and press ENTER.

b. If the ambiguity cannot be resolved, press SKIP CUE or TERM CUE SEQ.

c. The following cue appears:

ENT LOCAL TN
XXXX

Note

Xs represent the suggested entry.

(1) The purpose of the ENT LOCAL TN cue is to apply a track number to the fix located at the undestroyed reference mark, or if two reference marks still remain, at the fix located at reference mark 1.

6. Respond to the ENT LOCAL TN cue.

a. If the suggested entry is selected, proceed to step 7.

b. If a track number other than the suggested entry is to be entered, press numerics on the keyset.

7. Press ENTER.

a. If only one reference mark is being processed, proceed to step 8.

b. The following cue appears only if two reference marks are being processed:

ENT LOCAL TN
XXXX

c. The purpose of the second appearance of the ENT LOCAL TN cue is to apply a track number at the fix located at reference mark 2.

8. Respond to the second ENT LOCAL TN cue if it appears.

   a. The track number entered must differ from the track number previously entered for the first fix.

9. Press ENTER.

   a. In all cases where a previously assigned track number is selected, vice the suggested entry, the category and identity parameters will remain the same.

   b. When the suggested entry is selected, proceed to step 10.

   c. If two reference marks are being processed and only one of the entered local track numbers has been previously assigned, both fixes are entered into the system with the same category and identity parameter as the existing item with that track number. Proceed to step 20.

   d. If two reference marks are being processed and the track numbers entered were the suggested entries, proceed to step 10.

10. The following cue appears:

```
   SEL CAT-ID
1  AIR     F   6  SUB     H
2  SURF    F   7  AIR     U
3  SUB     F   8  SURF    U
4  AIR     H   9  SUB     U
5  SURF    H
```

11. Respond to the SEL CAT-ID cue.

   a. If cue decision 1, 4, 5, or 7 is selected, proceed to step 24.

   b. If decision 2 is selected, proceed to step 12.

   c. If cue decision 3, 6, or 9 is selected, proceed to step 14.

   d. If decision 8 is selected, proceed to step 22.

12. Press ENTER.

   a. The following cue appears:

```
   SEL PRI ID AMP
1  CONFIRMED FRIEND
2  AUXILIARY
3  SPECIAL MISSION
4  AMPHIBIOUS
5  LINE
                  OPTNL
```

13. Respond to the SEL PRI ID AMP cue.

   a. Press 1, 2, 3, 4, or 5 on the keyset. Proceed to step 24.

14. Press ENTER.

   a. The following cue appears:

```
   SURFACED SUB
1  YES
2  NO
```

15. Respond to the SURFACED SUB cue.

   a. If decision 1 is selected, proceed to step 20.

   b. If decision 2 is selected, proceed to step 16.

   c. A skip cue or term cue sequence response shall assume NO to the cue.

16. Press ENTER.

   a. The following cue appears:

```
   SEL SUBSURF CLASS
1  NO STATEMENT
2  POSSIBLE SUB
3  PROBABLE SUB
4  CERTAIN SUB
5  NON SUB
```

17. Respond to the SEL SUBSURF CLASS cue.

   a. If cue decision 1 or 5 is selected, all fixes being processed (either one or two) are entered into the system with the same category and identity parameters. Proceed to step 24.

   b. If one decision 2, 3, or 4 is selected, proceed to step 18.

18. Press ENTER.

    a. The following cue appears:

    ENT CONF LEVEL 1-4

19. Respond to the ENT CONF LEVEL cue.

20. Press ENTER.

    a. The following cue appears:

    SEL CLASS AMP
    1 PROPULSION UNK
    2 PROPULSION CON
    3 PROPULSION NUC

21. Respond to the SEL CLASS AMP cue.

    a. Press 1, 2, or 3 on the keyset. Proceed to step 24.

22. If decision 8 (surface unknown) is selected in response to the SEL CAT-ID cue, press ENTER.

    a. The following cue appears:

    SEL PRI ID AMP
    1 EVALUATED UNK
    2 ASSUMED FRIEND
    3 ASSUMED HOST

23. Respond to the SEL PRI ID AMP cue.

    a. Press 1, 2, or 3 on the keyset.

24. Press ENTER.

25. Upon entry of the fixes into the system, the following occurs:

    a. All reference marks are removed from the display.

    b. The initial ESM bearing (if any) is removed from the display.

    c. The ACK CNTCT alert is displayed at the other stations (except pilot).

    d. Function deactivates.

DEACTIVATION:

1. CMPT INTSCT is deactivated if pressed when amber.

2. Deactivation results:

    a. Cues and associated CMPT INTSCT symbols are removed.

    b. CMPT INTSCT changes from amber to green.

1.9.4.8 PROB CONTOR Option

TACCO
SENSO
COTAC

TAC AIDS

PURPOSE:

Generates and displays an ellipse around a hooked track, allowable fix, or intercept FTP.

PREREQUISITES:

1. TAC AID matrix is active.

2. Hook a track, allowable fix, or intercept FTP.

PROCEDURE:

1. Press PROB CONTOR.

    a. The following cue appears:

    ENT PROBABILITY

2. Respond to the cue.

    a. Press a numeric on the keyset (1 through 9) to enter desired probability and proceed to step 3.

    b. If the suggested entry is accepted, proceed to step 3.

3. Press ENTER.

    a. If no alert appears and a track was hooked, the following cue appears:

    ENT TIME-MIN

Note

When an intercept FTP has been hooked the ENT TIME-MIN cue is not displayed. The time interval is the time needed to intercept the FTP. This cue allows the operator to display the probability contour for a specified time period.

b. If no alert appears and an allowable fix or intercept FTP was hooked, proceed to step 6.

4. Respond to the ENT TIME-MIN cue.

   a. Press numerics on the keyset to enter the desired time.

5. Press ENTER.

   a. The selected probability contour is displayed around the symbol.

   b. The contour is updated every 2 seconds.

6. The following cue appears:

   ENT SPEED-KTS
   --

7. Respond to the ENT SPEED-KTS cue.

   a. Press numerics on the keyset (00 to 99).

8. Press ENTER.

   a. The selected probability contour is displayed around the allowable fix or intercept FTP.

   b. The contour is updated every 2 seconds.

DEACTIVATION:

1. PROB CONTOR is deactivated if pressed when amber.

2. Deactivation results:

   a. Cues and associated PROB CONTOR symbol are removed from display.

   b. PROB CONTOR changes from amber to green.

1.9.4.9 SINGLE PRED Option

TACCO
SENSO
COTAC

TAC AIDS

PURPOSE:

Generates and displays a single prediction of the past or future position of a fix or track.

PREREQUISITES:

1. TAC AIDS matrix is active.

2. A fix or track symbol is hooked.

PROCEDURE:

1. Press SINGLE PRED (lights amber).

   a. If the hooked symbol is a fix, the following cue appears:

      ENT COURSE-DEG
      ---

   b. If the hooked symbol is a track, the following cue appears:

      ENT TIME-MIN
      ---

      (1) Proceed to step 6.

2. Respond to the ENT COURSE-DEG cue.

   a. Press numerics on the keyset to enter the desired course.

3. Press ENTER.

   a. The following cue appears:

      ENT SPEED-KTS
      --

4. Respond to the cue.

   a. Press numerics on the keyset to enter the desired speed.

5. Press ENTER.

   a. The following cue appears:

      ENT TIME-MIN
      ---

6. Respond to the ENT TIME-MIN cue.

   a. Press numerics on keyset to enter (+ or –) desired time, based on computer time.

7. Press ENTER.

   a. A single predict symbol is displayed at the computed future or past position on the COTAC, TACCO, and SENSO MPDs.

Note

One single predict symbol is allowed in the system at a time.

DEACTIVATION:

1. SINGLE PRED is deactivated if pressed when amber.

2. Deactivation results:

   a. Removal of cues and symbol from the displays.

   b. SINGLE PRED changes from amber to green.

1.9.4.10 INTCPT FTP Option

TACCO
SENSO
COTAC

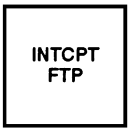

TAC AIDS

PURPOSE:

Computes and displays a target intercept FTP.

PREREQUISITES:

1. TAC AIDS matrix is active.

2. A track symbol or continuous predict is hooked.

PROCEDURE:

1. Press INTCPT FTP (lights amber).

   a. If no alert appears:

      (1) The intercept FTP is displayed.

      (2) Steering commands are initiated to capture the FTP.

Note

Only one intercept FTP may be active at one time.

DEACTIVATION:

1. INTCPT FTP is deactivated if pressed when amber.

2. Deactivation results:

   a. INTCPT FTP changes from amber to green.

   b. The intercept FTP is removed from the display.

1.9.4.11 ORBIT Option

TACCO
SENSO
COTAC

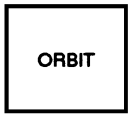

TAC AIDS

PURPOSE:

Generates and displays an orbit FTP that provides steering commands which either direct the aircraft to the center of the circle (datum capture) and then into the circle, or direct the aircraft to a point on the circle (tangential capture) and then around the circle.

PREREQUISITES:

1. TAC AIDS matrix is active.

2. Center of orbit is designated by hooking a point.

PROCEDURE:

1. Press ORBIT (lights amber).

   a. The following cue appears.

      ENT RADIUS-YDS
      ----

2. Respond to the ENT RADIUS-YDS cue.

   a. If the suggested entry is selected, proceed to step 3.

   b. Enter the orbit radius by pressing the numerics on the keyset.

3. Press ENTER.

   a. If no alert appears, the following cue appears:

      SEL CAPTURE TYPE
      1 DATUM
      2 TANGENTIAL

      (1) The orbit circle is displayed on the MPD.

   b. If the following alert appears:

      ZZZZ ORBIT LIMIT

      (1) An orbit radius less than the aircraft minimum turn radius was selected.

      (2) ENT RADIUS-YDS cue remains displayed.

      (3) Reenter orbit radius per step 2.

4. Respond to the SEL CAPTURE TYPE cue.

   a. Operator selects either 1 or 2 on the keyset.

5. Press ENTER.

   a. The orbit circle becomes an FTP.

   b. The program generates steering commands necessary for the aircraft to capture the FTP as selected, and to fly the aircraft in the specified orbit.

DEACTIVATION:

1. ORBIT is deactivated if pressed when amber.

2. Deactivation results:

   a. The orbit circle is removed from the MPD.

   b. FTP is removed from the system.

   c. ORBIT changes from amber to green.

1.9.5 SONO CONT Matrix

TACCO
SENSO

SONO CONT

PURPOSE:

The SONO CONT Matrix and all associated option selections are blacklit and no longer available.

1.9.6 PILOT DSPL Matrix

TACCO
SENSO
COTAC

PILOT DSPL

PURPOSE:

Displays option select function legends associated with the PILOT DSPL matrix.

PREREQUISITE:

None.

PROCEDURE:

1. Press PILOT DSPL (lights amber).

Note

- Pilot display legend on the COTAC INCOS is PLT DSP.
- PLT DSP at the COTAC station does not light amber when pressed. The legend goes black and the matrix C DPOSIT SYMBOL legend appears.

a. PILOT DSPL option select function legends are displayed in the upper half of the TACCO matrix B option select switches.

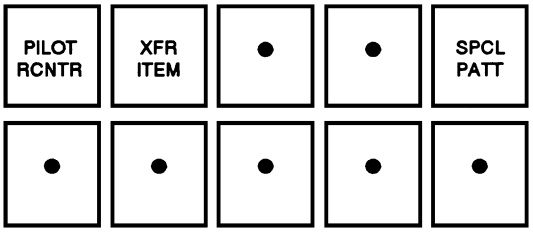

b. PLT DSP option select function legends at the COTAC station are displayed in the lower half of the matrix B option select switches.

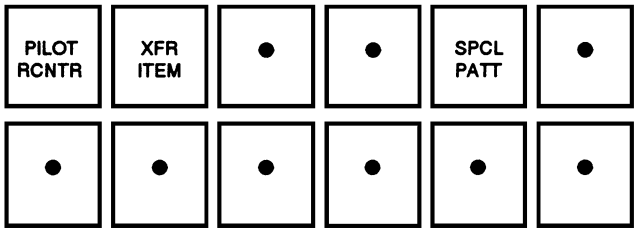

DEACTIVATION:

1. PILOT DSPL/PLT DSP matrix is deactivated when another matrix select switch is pressed that requires replacing of the option select legends.

2. Deactivation results:

   a. PILOT/DSPL/PLT DSP option select function legends are replaced by option select function legends associated with another matrix select.

   b. PILOT DSPL matrix switch legend changes from amber to green.

1.9.6.1 PILOT RCNTR Option

TACCO
SENSO
COTAC

PILOT DSPL

PURPOSE:

Recenters the pilot display on a hooked position.

PREREQUISITES:

1. PILOT DSPL/PLT DSP matrix is active.

2. A position has been hooked.

PROCEDURE:

1. Press PILOT RCNTR (momentary).

   a. The pilot display is recentered on the hooked position.

1.9.6.2 XFR ITEM Option

TACCO
SENSO
COTAC

PILOT DSPL

PURPOSE:

Transfers a designated/selected symbol to the pilot display.

PREREQUISITES:

1. PILOT DSPL/PLT DSP matrix is active.

2. A symbol has been hooked.

3. TAC PLOT, ESM plot, or scan-converted radar active.

PROCEDURE:

1. Press XFR ITEM (lights amber).

   a. The hooked symbol is transferred to the pilot display.

Note

A total of three items can be transferred to the pilot display at any one time, one each from the COTAC, TACCO, and SENSO stations.

DEACTIVATION:

1. XFR ITEM is deactivated if pressed when amber.

2. Deactivation results:

   a. XFR ITEM changes from amber to green.

   b. The symbol is removed from the pilot display.

1.9.6.3 SPCL PATT Option

TACCO
SENS
COTAC

PILOT DSPL

PURPOSE:

Displays a geometric pattern with as many as eight sides depicting an area of interest.

PREREQUISITES:

1. PILOT/PLT DSP matrix is active.
2. TAC PLOT or scan-converted radar is active.
3. A point on the display has been hooked.

PROCEDURE:

1. Press SPCL PATT (lights amber).

   a. The following cue appears:

      HOOK NEXT POINT

2. Respond to the HOOK NEXT POINT cue.

   a. Position hook to another point.

3. Press HOOK VERIFY.
4. Press ENTER.

   a. A vector is displayed from the first hooked point to the second hooked point.

   b. To add additional vectors, repeat steps 2, 3, and 4.

Note

Construction of eight vectors removes the HOOK NEXT POINT cue from the display and the function is completed.

   c. The HOOK NEXT POINT cue remains displayed until the operator has constructed his desired search area.

Note

The HOOK NEXT POINT cue becomes optional.

   d. To terminate the cueing sequence before the eighth vector is displayed, proceed to step 5.

5. Press TERM CUE SEQ.

   a. HOOK NEXT POINT cue is erased from the display.

   b. The special pattern is displayed at all other stations.

DEACTIVATION:

1. SPCL PATT is deactivated if pressed when amber.
2. Deactivation results:

   a. SPCL PATT changes from amber to green.

   b. The special pattern is removed from all displays.

1.9.7 PTA/CON PTA Matrix

TACCO
SENSO
COTAC

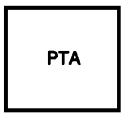

PTA

PURPOSE:

Displays option select function legends associated with the PTA/CON PTA mode.

PREREQUISITE:

None.

PROCEDURE:

1. Press CON PTA (lights amber).

Note

The PTA Matrix and all associated option selections are blacklit and no longer available.

Note

- At the COTAC station, the following CON PTA matrix selections are blacklit and no longer available: TGT TRKR, POSN UPDATE, TRKR RSTRT, BRG INHIBIT, PTA AMPLIFY, PATT UPDATE.

- CON PTA at COTAC station does not light amber when pressed. Legend goes black and the matrix C CON PTA legend appears.

  a. CON PTA option select function legends at the COTAC station are displayed in the lower half of matrix B option select switches.

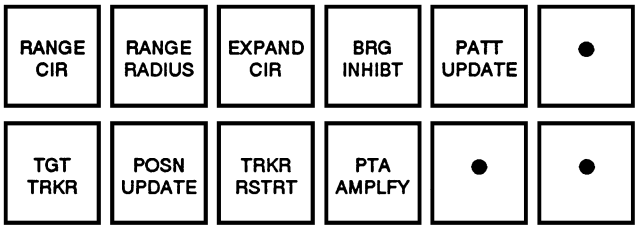

DEACTIVATION:

1. CON PTA matrix is deactivated when another matrix select switch is pressed that requires replacing of the option select legends.

2. Deactivation results:

   CON PTA option select function legends are replaced by option select function legends associated with another matrix select.

Note

RANGE CIR, RANGE RADIUS, and EXPAND CIR options are discussed under TACCO/SENSO display control functions.

1.9.8 REINIT Matrix

TACCO
SENSO
COTAC

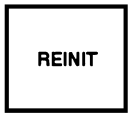

REINIT

PURPOSE:

Displays option select function legends associated with the REINIT.

PREREQUISITE:

None.

PROCEDURE:

1. Press REINIT (lights amber).

Note

- Reinitialize legend on the COTAC INCOS is RNZ.

- RNZ at the COTAC station does not light amber when pressed. The legend goes black and the matrix C DSTRY DATA legend appears.

  a. REINIT option select function legends are displayed in the upper half of the matrix A option select switches.

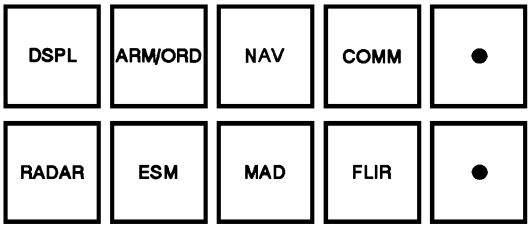

DEACTIVATION:

1. REINIT matrix is deactivated when another matrix select switch is pressed that requires replacing of the option select legends.

2. Deactivation results.

   a. REINIT option select function legends are replaced by the set of option select function legends associated with another matrix select.

   b. REINIT matrix switch legend changes from amber to green.

1.9.8.1 DSPL Option

TACCO
SENSO
COTAC

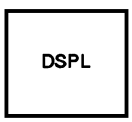

REINIT

PURPOSE:

Reinitializes the tactical display system.

PREREQUISITE:

1. REINIT/RNZ matrix is active.

PROCEDURE:

1. Press DSPL (momentary).

   a. Tactical display system is reinitialized as described in Initialization Under Operational Program Loading procedures.

1.9.8.2 ARM/ORD Option

TACCO
SENSO
COTAC

REINIT

PURPOSE:

Displays SLC and weapon stations status on the SEARCH STORES INVENTORY and KILL STORES INVENTORY Tableaus without using the SYSTEM STATUS Tableau cueing sequence. The ARM/ORD switch is also used to clear momentary defects that appear in the SYSTEM STATUS Tableau and perform SLC continuity checks.

PREREQUISITE:

1. REINIT/RNZ matrix is active.

PROCEDURE:

1. Press ARM/ORD (momentary).

   a. Reinitializes the armament system as described under the armament system (refer to Chapter 3.

1.9.8.3 NAV Option

TACCO
SENSO
COTAC

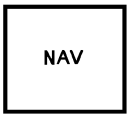

REINIT

PURPOSE:

Reinitializes the NDCR/NIU without using the SYSTEM STATUS Tableau cueing sequence.

PREREQUISITE:

1. REINIT/RNZ matrix is active.

PROCEDURE:

1. Press NAV(momentary).

   a. Clears DEF and DIS status in SYSTEM STATUS Tableau.

   b. Establishes communication between NDCR/NIU and GPDC.

1.9.8.4 COMM Option

TACCO
SENSO
COTAC

REINIT

PURPOSE:

Reestablishes communication with the GPDC for the communication system.

PREREQUISITES:

1. REINIT/RNZ matrix is active.

PROCEDURE:

1. Press COMM (momentary).

1.9.8.5 RADAR Option

TACCO
SENSO
COTAC

REINIT

PURPOSE:

Reinitializes the radar system to the last known parameters without using the SYSTEM STATUS Tableau cueing sequence.

PREREQUISITE:

1. REINIT/RNZ matrix is active.

PROCEDURE:

1. Press RADAR (momentary).

   a. Reinitializes the radar to the last known parameters.

1.9.8.6 ESM Option

TACCO
SENSO
COTAC

REINIT

PURPOSE:

Reinitializes or reloads the OMP in the ESM.

Note

Reinitializing the ESM via system status will have the same effect.

PREREQUISITE:

1. ESM switch on.
2. REINIT matrix active.

PROCEDURE:

1. Press ESM (lights amber).
2. Following cue is displayed:

```
SEL ESM REINIT
1 REINIT
2 RELOAD-REINIT
```

3. Select 1 or 2 and press ENTER.
4. The following cue is displayed.

```
SEL OBLIB-SOI SRC
1 BOTH CURRENT
2 BOTH PID
3 CURRENT-PID
4 PID-CURRENT
                OPTNL
```

5. If 1 is selected, ESM Operator Library entries and SOI lists remain at their current values.
6. If 2 is selected, ESM Operator Library entries and SOI lists are reset to the PID condition.
7. If 3 is selected, ESM Operator Library entries remain at their current values and ESM SOI lists are reset to the PID condition.
8. If 4 is selected, ESM Operator Library entries are reset to the PID condition and ESM SOI lists remain at their current values.

Note

If 1 or 4 is selected, the current active SOI list is downloaded to the ALR-76 and will be displayed for any subsequent RESET SOI.

9. The following cue is displayed:

```
SEL DFLT TMPLTS
1 YES
2 NO
```

10. Select 1 or 2 and press ENTER.

Note

Utilizing the 9.3 software, it is recommended that the templates should not be utilized to aid in agile processing. However, selecting default templates will not adversely affect performance.

11. The following cue is displayed:

```
SEL PLOT DENSITY
1 LOW
2 HIGH
```

12. Select 1 or 2 and press ENTER.
13. If 1 is selected, 8 emitters will be available for display, 16 may be retained.

14. If 2 is selected, 16 emitters will be available for display, 8 may be retained.

15. If ESM REINIT was selected, ESM is reinitialized.

16. If ESM RELOAD-REINIT was selected, ESM will load accordingly.

1.9.8.7 MAD Option

TACCO
SENSO
COTAC

REINIT

The MAD option select is blacklit and no longer available.

1.9.8.8 FLIR Option

TACCO
SENSO
COTAC

REINIT

PURPOSE:

Reinitializes the FLIR system to the last known configuration without using the SYSTEM STATUS Tableau cueing sequence.

PREREQUISITE:

1. REINIT/RNZ matrix is active.

PROCEDURE:

1. Press FLIR (momentary).

    a. Reinitializes the FLIR as described under FLIR system (refer to Chapter 6).

1.10 TACTICAL DIAGNOSTIC/OPERATIONAL READINESS TESTS

1.10.1 Introduction. The TD and ORT tests provide for a systematic and timely test of various systems installed aboard the S-3B.

1.10.2 Tactical Diagnostic Tests. These provide the operator with the means to determine faulty components when system malfunctions are encountered during normal operation. The TD provides a readout in the appropriate EXPANDED SYSTEM STATUS Tableau of defective components or cards within the WRA or SRA. TDs are available for the following systems:

1. Radar

2. ESM

1.10.3 Operational Readiness Tests. These provide the operator with a GO or NO-GO status of a system prior to launch. The ORT tests the hardware by sending signals through the system which simulate tactical operations. Proper transmission and reception of test signals result in a GO status indicating a high probability of normal airborne operation. ORTs are available for the following systems:

1. Radar

2. ESM

1.10.4 DIA/ORT MATRIX

COTAC

DIA/
ORT

PURPOSE:

Displays option select function legends associated with the DIA/ORT matrix at the COTAC station.

PREREQUISITE:

None.

PROCEDURE:

1. Press DIA/ ORT at COTAC (lights amber).

    a. DIA/ORT option select function legends at the COTAC station are displayed.

(COTAC DIA/ORT)

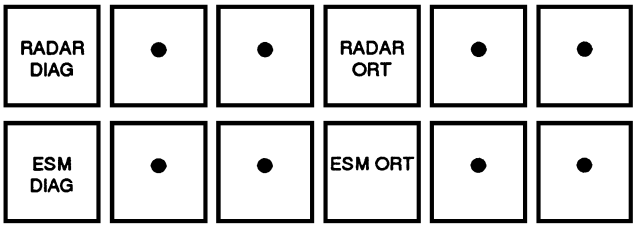

DEACTIVATION:

1. DIA/ORT matrix is deactivated when another matrix select switch is pressed that requires replacing of the option select legends.

2. Deactivation results:

   a. DIA/ORT option select function legends are replaced by the option select function legends associated with another matrix.

   b. DIA/ORT matrix switch legends change from amber to green.

1.10.5 RADAR DIAGNOSTIC Option

COTAC [RADAR] DIA/ORT

PURPOSE:

To assist the operator in assessing the radar functional capability to support the assigned mission.

To determine WRA fault isolation and replacement data for use by 0-level maintenance crews.

PREREQUISITES:

1. Radar is warmed up.

2. Radar ORT function is not active.

3. DIA/ORT matrix is active.

PROCEDURE:

1. Press RADAR DIAG (lights amber).

   a. The following cue appears:

      SEL RAD OPTION
      1 NO RADIATE
      2 DUMMY RADIATE
      3 ANTENNA RADIATE

2. Respond to the SEL RAD OPTION cue.

   a. Press numerics on the keyset to select the desired option.

   b. If (1) NO RADIATE was selected, proceed to step 3.

   c. If (2) DUMMY RADIATE was selected, proceed to step 4.

   d. If (3) ANTENNA RADIATE was selected, proceed to step 7.

WARNING

- The radar shall be secured during in-flight refueling operations.
- Proper safety shall be exercised by flightcrews during close formation flying within 250 feet.
- Observe the following radiation hazard distances to prevent fire or personnel injury during ground operations:

	Full Power	Dummy Load
Fueling equipment	250 feet	0 feet
Fuel tanks	250 feet	0 feet
Personnel	250 feet	0 feet

3. Press ENTER.

   a. The following alert is displayed upon test completion:

      RDR INCM RAD

Note

The radar incomplete radiate alert notifies the operator that the DIAG was not run as a complete test. This test checks the status of RIU only.

4. Press ENTER.

   a. The following cue appears:

      ALERT PERSONNEL BEFORE
      RADIATING PRESS ENTER

5. Press ENTER.

   a. The following cue appears if weight-on-wheels condition exists:

      ENGAGE AND HOLD ACLS-RADAR
      TEST SWITCH IN RADAR
      POSITION PRESS ENTER

Note

Depressing ENTER overrides the weight-on-wheels logic and initiates the RIU self-test.

6. Press ENTER.

   a. Upon test completion, the following alerts appear:

      RELEASE ACLS-RADAR

      RDR INCM RAD

7. Press ENTER.

   a. The following cue appears:

      SEL TILT
      1 +10
      2 + 5
      3 0
      4 – 5
      5 –10
      6 –15

8. Respond to the SEL TILT cue.

   a. Press numerics on the keyset to select the desired tilt.

9. Press ENTER.

   a. The following cue appears:

      SEL TEST SECTOR
      1 10 6 60
      2 20 7 90
      3 30 8 120
      4 40 9 FULL
      5 50

10. Respond to the SEL TEST SECTOR cue.

    a. Press numerics on the keyset to select the desired sector width.

    b. If any selection other than FULL was selected, proceed to step 11.

    c. If FULL was selected, proceed to step 12.

11. Press ENTER.

    a. The following cue appears:

       POSITION VECTOR TO
       DESIRED ANTENNA ANGLE
       IN DISPLAYED LIMITS
       PRESS ENTER

12. Repeat steps 4 and 5.

13. Press ENTER.

    a. The following cue appears:

       OBSERVE ANTENNA
       SECTORING OVER
       ANTENNA VECTOR
       PRESS ENTER

14. Press ENTER.

    a. Upon test completion, the following alerts appear:

       RELEASE ACLS

       RADAR GO (if no faults are noted)

DEACTIVATION:

1. RADAR DIAG is deactivated when one of the following occurs:

   a. RADAR DIAG in COTAC DIA ORT matrix is pressed when amber.

   b. Activation of another function requiring the use of the cueing area.

2. Deactivation results:

   a. RADAR DIAG changes from amber to green.

1.10.5.1 ESM DIAG Option

COTAC | ESM | DIA/ORT

PURPOSE:

To assist the operator in assessing the ESM functional capability to support the assigned mission.

To determine WRA fault isolation and replacement data for use by O-level maintenance crews.

PREREQUISITES:

1. DIAG matrix is active.
2. ESM ORT is not active.
3. ESM INIT/REINIT is not active.

PROCEDURE:

1. Press ESM DIAG (lights amber).
2. ESM diagnostics is loaded and the following alert is displayed:

   ZZZZ ESM LOADING

3. ESM DIAG is initiated.
4. ESM EXPANDED SUBSYSTEM STATUS Tableau is displayed.

   a. If no faults are noted, the following alert is displayed:

   ZZZZ ESM GO

DEACTIVATION:

1. ESM DIAG is deactivated when one of the following occurs:

   a. ESM DIAG is pressed when amber.

   b. ESM DIAG test completion.

   c. Activation of ESM INIT/REINIT.

Note

After an ESM GO alert is received, the ESM OMP and PDIP data must be reloaded via the REINIT or PRGM CNTL matrices.

2. Deactivation results:

   a. ESM DIAG in the COTAC DIA ORT matrix changes from amber to green.

   b. SYSTEM STATUS Tableau is updated.

1.10.5.2 RADAR ORT Option

COTAC | RADAR | DIA/ORT

PURPOSE:

To assist the operator in assessing the radar functional capability to support the assigned mission.

PREREQUISITES:

1. Radar is warmed up.
2. Radar DIAG function is not active.
3. DIA ORT matrix is active.

PROCEDURE:

1. Press RADAR ORT (lights amber).

   a. The following cue appears:

   SEL RAD OPTION
   1 NO RADIATE
   2 DUMMY RADIATE
   3 ANTENNA RADIATE

2. Respond to SEL RAD OPTION cue.

   a. Press numerics on the keyset to select the desired option.

   b. If (1) NO RADIATE was selected, proceed to step 3.

   c. If (2) DUMMY RADIATE was selected, proceed to step 4.

d. If (3) ANTENNA RADIATE was selected, proceed to step 7.

WARNING

- RF radiation hazards exist for the S-3B radar when the cue decision (3) ANTENNA RADIATE is selected.
- An RF radiation standoff distance for personnel and for fuel or fueling equipment (250 feet) shall be observed.

3. Press ENTER.

   a. The following alert is displayed upon test completion:

   RDR INCM RAD

Note

The radar incomplete radiate alert notifies the operator that the ORT was not run as a complete test. This test checks the status of RIU only.

4. Press ENTER.

   a. The following cue appears:

   ALERT PERSONNEL BEFORE
   RADIATING PRESS ENTER

5. Press ENTER.

   a. The following cue appears:

   ENGAGE AND HOLD ACLS — RADAR
   TEST SWITCH IN RADAR
   POSITION PRESS ENTER

Note

Depressing ENTER overrides the weight-on-wheels logic and initiates the RIU self-test.

6. Press ENTER.

   a. Upon test completion, the following alerts appear:

   RELEASE ACLS-RADAR
   RDR INCM RAD

7. Press ENTER.

   a. The following cue appears:

   SEL TILT
   1 +10 4 – 5
   2 +5 5 – 10
   3 0 6 – 15

8. Respond to the SEL TILT cue.

   a. Press numerics on the keyset to select the desired tilt.

9. Press ENTER.

   a. The following cue appears:

   SEL TEST SECTOR
   1 10 6 60
   2 20 7 90
   3 30 8 120
   4 40 9 FULL
   5 50

10. Respond to the SEL TEST SECTOR cue.

    a. Press numerics on the keyset to select the desired sector width.

    b. If any selection other than FULL was selected, proceed to step 11.

    c. If FULL was selected, proceed to step 12.

11. Press ENTER.

    a. The following cue appears:

    POSITION VECTOR TO
    ESIRED ANTENNA ANGLE
    IN DISPLAYED LIMITS
    PRESS ENTER

12. Repeat steps 4 and 5.

13. Press ENTER.

    a. The following cue appears:

    OBSERVE ANTENNA
    SECTORING OVER
    ANTENNA VECTOR
    PRESS ENTER

14. Press ENTER.

    a. Upon test completion, the following alerts appear:

    RELEASE ACLS-RADAR

    RADAR GO (if no faults are noted)

DEACTIVATION:

1. RADAR ORT is deactivated when one of the following occurs:

    a. RADAR ORT is pressed when amber.

    b. Activation of another function requiring the use of the cueing area.

2. Deactivation results:

    a. RADAR ORT changes from amber to green.

1.10.5.3 ESM ORT Option

COTAC | ESM | DIA/ORT

PURPOSE:

To assist the operator in assessing the ESM functional capability to support the assigned mission.

PREREQUISITES:

1. ORT matrix is active.

2. ESM DIAG is not active.

PROCEDURE:

1. Press ESM ORT (lights amber).

2. ESM ORT is initiated.

    a. If no faults are noted, the following alert is displayed:

    ESM GO

DEACTIVATION:

1. ESM ORT is deactivated when one of the following occurs:

    a. ESM ORT is pressed when amber.

    b. ESM ORT test completion.

    c. Activation of ESM INIT/REINIT.

2. Deactivation results:

    a. ESM ORT changes from amber to green.

    b. SYSTEM STATUS Tableau is updated.

CHAPTER 2

Data Processing — AYK-23

2.1 DATA PROCESSING — AYK-23

2.1.1 Introduction. The DPS receives, processes, analyzes, and correlates a large volume of data from the surface warfare (SUW) sensors and the operators, displaying the results to the operators. Thus, the DPS allows the S-3 crew to efficiently and effectively detect, classify, track, and destroy hostile targets.

The data processing hardware is listed in Figure 2-1.

Figure 2-2 shows the S-3 system block diagram.

2.1.2 General Purpose Digital Computer. The GPDC (Figure 2-3) is a general purpose, stored program computer that controls the weapons system. The GPDC receives data inputs from SUW sensors either directly or from operators through the INCOS. The GPDC processes this data to control the avionics systems and displays information to the operators through the TDS.

The GPDC is a VME-based open architecture to allow for future growth. Figure 2-4 lists the Hardware Configuration Items (HWCI) that make up the AYK-23. The AYK-23 layout and peripheral equipment interface are shown in Figure 2-5.

The following paragraphs provide a description of each HWCI.

2.1.2.1 General Purpose Controller. The GPC is the Central Processing Unit for the AYK-23. It is designed to perform the general purpose computing power required for AYK-10 emulation. The main processing element of the GPC is a Motorola 68030 microprocessor operating at a system clock rate of 20 MHz. Local volatile memory consisting of 1 Meg x 32-bit words of dynamic RAM memory allows for faster program execution. Resident on the GPC module is 32K bytes of Electrically Erasable Programmable Read Only Memory (EEPROM) accessible only by the 68030 microprocessor.

2.1.2.2 Enhanced General Purpose Controller. The EGPCs are not used with the translated software and are included for future growth. The main processing element of the EGPC is a Motorola 68060.

2.1.2.3 Global Memory Array. The GMAs provide mass global data retention for general purpose data storage and provide non-volatile storage for AYK-23 software associated with start-up, BIT, and loading. Each GMA contains 4 blocks, each with 2M x 32-bit words of memory. The GMAs contain 512K x 32-bit words of EEPROM and 1.5M x 32-bit words of SRAM. Only one of the GMAs is used with the translated software.

TYPE DESIGNATOR	NOMENCLATURE	COMMON TERMINOLOGY	LOCATION
AN/AYK-23(V)	General Purpose Digital Computer	GPDC or Computer	Aft internal bay
RD-348A/ASH	Digital Memory Unit	DMTU	Left internal bay
AN/ASQ-147	Integrated Control System	INCOS	One at each operator station
AN/ASA-82	Tactical Display System	TDS	One at each operator station

Figure 2-1. Data Processing Components

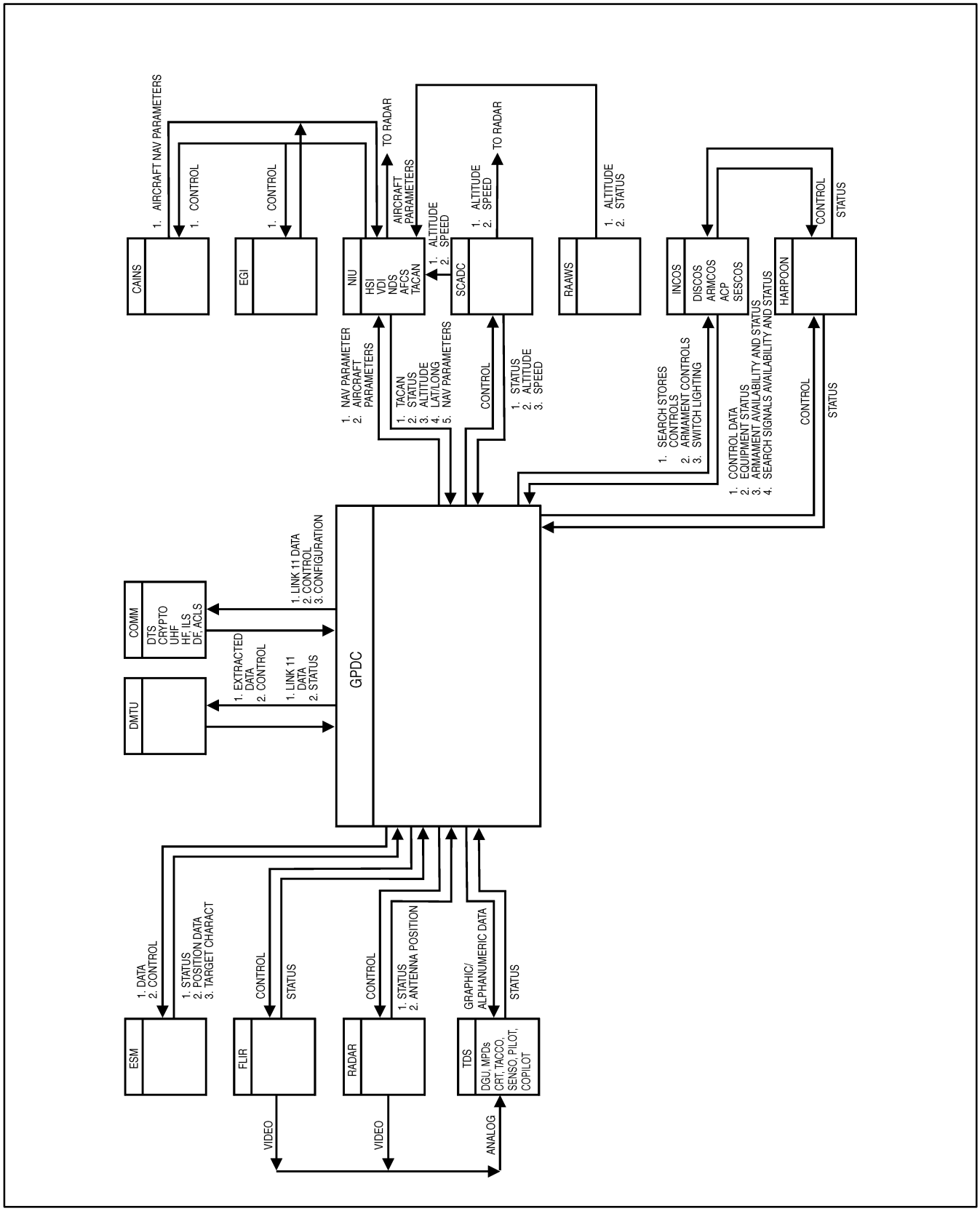

Figure 2-2. S-3 System Block Diagram

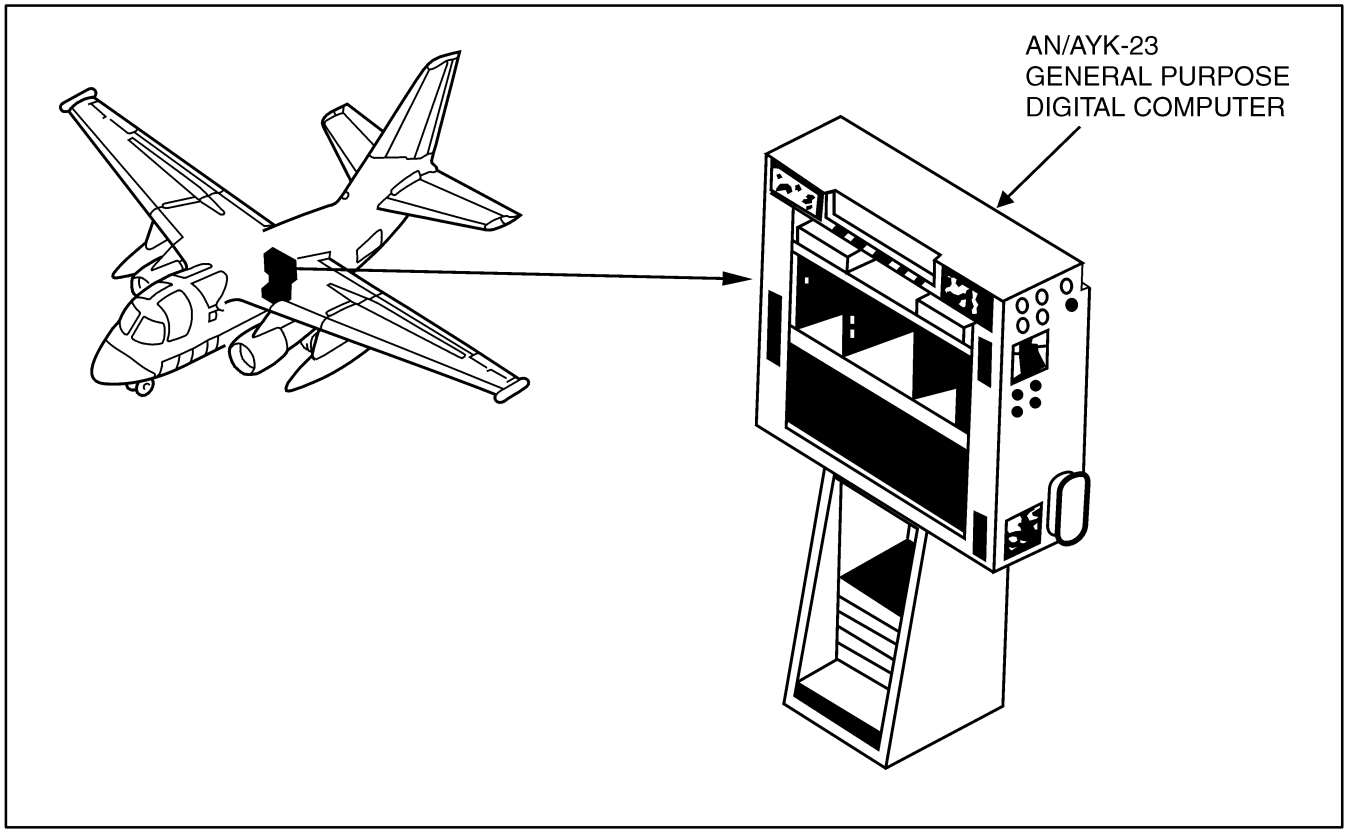

Figure 2-3. GPDC Component Location

2.1.2.4 Manchester Input/Output. The MIOs provide a Type I and Type II Manchester Serial Interface computer channel to support the AYK-10 emulation. Each MIO contains a 32-bit MC68020 microprocessor.

2.1.2.5 Harpoon Input/Output. The HIO provides a Type IV Serial I/O channel and a Discrete I/O channel, which interface the AYK-23 with the Harpoon missile Midcourse Guidance Unit (MGU) and the Harpoon Aircraft Launch Control System (HACLS). Each HIO contains a 32-bit MC68020 microprocessor and each card interfaces with its respective weapon station.

2.1.2.6 Serial Input/Output. The SIO is designed to enable the AYK-23 to communicate on two, dual redundant MIL-STD 1553B bus channels via the VME bus. This interface is included for future growth.

2.1.2.7 Maintenance Interface Module. The MIM, in conjunction with the MTS and MP, provides the AYK-23's maintenance capability.

2.1.2.8 EMI Filter. The EMI filters are designed to remove RF noise above 40 kHz on the AC lines entering the AYK-23 cabinet.

2.1.2.9 Power Conditioner. The PC converts 115VAC, 3-phase, 400-Hz AC aircraft power to 270VDC for use by the Power Regulators. The PC receives power from both buses for load sharing and redundancy. Failure of either source or either rectifier/filter path will cause the other side to automatically take over, with no interruption to operation.

2.1.2.10 Power Regulator. The PR is a bussable module that allows current sharing on all outputs. It provides under-voltage, over-voltage, and over-current protection for the AYK-23.

2.1.2.11 Logic Back Plane. The LBP provides the signal interconnect and power distribution for the AYK-23 module baseline configuration and future growth options.

HWCI	PURPOSE
One General Purpose Controller (GPC)	Processing
Two Global Memory Arrays (GMA)	Mass Non-Volatile Storage
Two Enhanced GPCs (EGPC)	Processing (Growth)
Six Manchester I/Os (MIO)	AYK-10 Interface Emulation
Two Harpoon I/Os (HIO)	AYK-10 Interface Emulation
One Serial I/O (SIO)	1553B Interface (Growth)
One Maintenance Panel (MP)	Maintenance Support System
One Maintenance /Temp-sense/SMC Power Module (MTS)	Maintenance Support System
One Maintenance Interface Module (MIM)	Maintenance Support System
Two EMI Filters (EF)	Power Distribution System
One Power Conditioner (PC)	Power Distribution System
Two Power Regulators (PR)	Power Distribution System
One Logic Backplane (LBP)	Interconnect
One Power Backplane (PBP)	Interconnect
One Left Connector Interface Card (LCIC)	Connector and Cabling

Figure 2-4. AYK-23 Hardware Configuration Items

2.1.2.12 Power Back Plane. The PBP has 11 module slots. Ten slots are allocated for Power Regulators (five for each logic rack). The power chassis was designed to support both the upper and lower racks and two modules are included in the baseline configuration.

2.1.2.13 Left Connector Interface Card. The LCIC primary function is the facilitate I/O connections from the logic backplane to the left side of the cabinet.

2.1.3 Digital Memory Unit/Transportable Cartridge. The DMTU TC system utilizes a 104 MB Winchester hard disk system that records and plays back data to the GPDC. The hard drive consists of four 3-1/2-inch thin film platters with a total of eight recording surfaces. The hard drive system is housed in a removable cartridge. Figure 2-6 shows the DMTU and its location in the left internal avionics rack. Figure 2-7 shows the TC program and memory storage layout.

2.1.3.1 DMTU Power-On Self-Test. When electrical power is first applied to the DMTU, a 12-second self-test is executed during which the system will be unavailable for use. Following the 12-second self-test, the front panel BITE 1, BITE 2, and PWR LEDs should all be illuminated indicating the system's readiness for on-line commands. If any LEDs are extinguished, isolate the fault according to the following (see Figure 2-8):

1. PWR LED off — Verify input power (115 vac) is available (ETM indicating movement), then replace DMTU WRA.

2. BITE 1 LED off/BITE 2 LED on — Indicates a TC or DEM subunit failure. Replace TC first, then DMTU WRA.

3. BITE 1 LED on/BITE 2 LED off — Not a programmed self-test fault indication. Possibly defective BITE 2 LED.

4. BITE 1 LED off/BITE 2 LED off — Indicates a Type 1 adapter subunit self-test failure. TC also possibly defective. Replace TC first, followed by the DMTU WRA.

5. BITE 1 LED flashing/BITE 2 LED on — Indicates either the DMTU door is open or a TC has not been installed in the DMTU. Once the fault condition is remedied, it may be necessary to cycle DMTU power to reinitialize the power-on self-test.

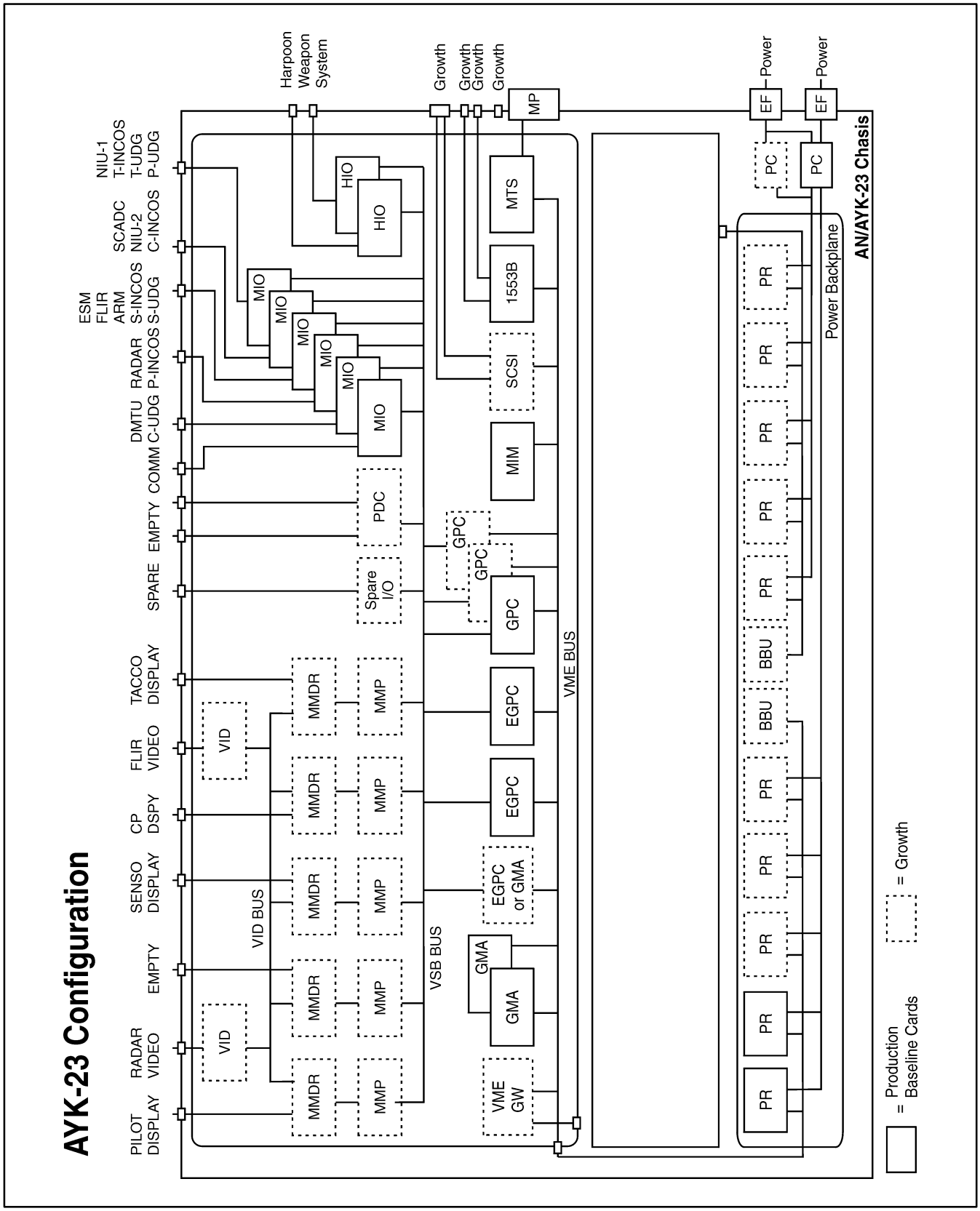

Figure 2-5. GPDC/Peripheral Equipment Interface

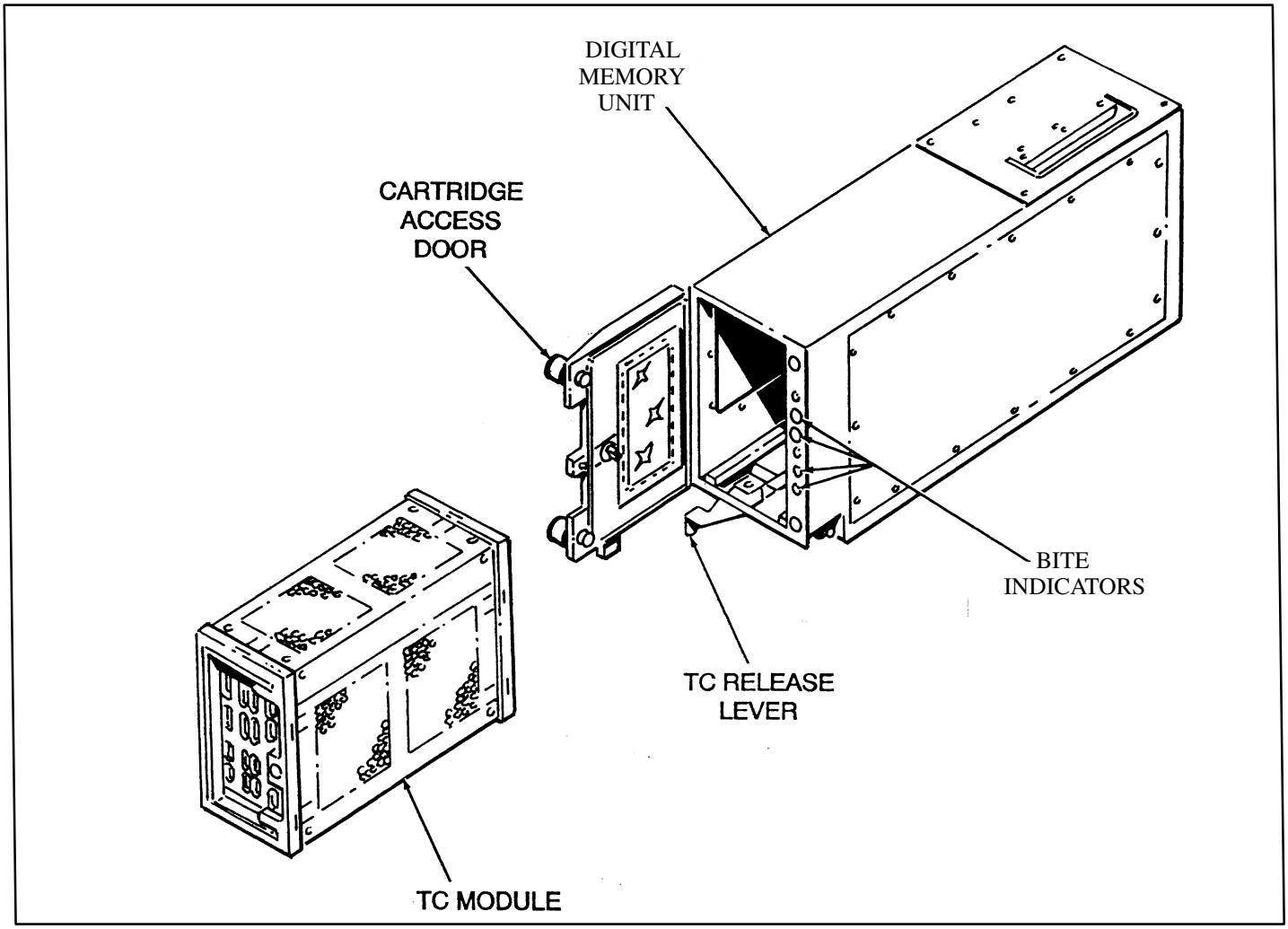

Figure 2-6. Digital Memory Unit

TRACK
1 DMTU DIRECTORY/MEMORY MAP
2 DATA EXTRACT MISSION EVENTS
3 SYSTEM LOADER/MEMORY MAP/TACTICAL MISSION PROGRAM/ESM LIBRARY/PDIP DATA
4 DATA EXTRACT OVERFLOW FROM TRACK 2
5 SYSTEM LOADER/MEMORY MAP/SYSTEM TEST PROGRAM/ESM DT
6 DATA EXTRACT OVERFLOW FROM TRACK 4
7 DMTU DIRECTORY/MEMORY MAP/ESM PROGRAM/FIRMWARE

Figure 2-7. DMTU Track Layout

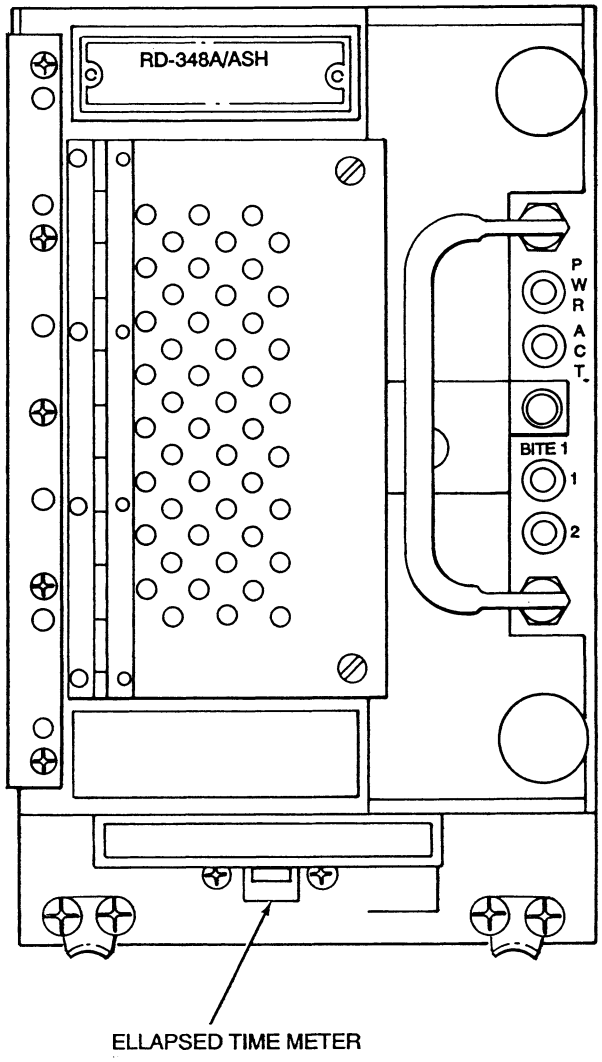

BITE	INDICATES
PWR (Power)	When on, indicates that the DMTU power supply voltages are present and within tolerances. An out-of-tolerance voltage will cause the PWR indication to extinguish.
ACT (Activity)	When on, indicates that the DMTU is being accessed by the GPDC. DMTU/GPDC communications are good.
BITE 1	When on, indicates the BIT circuitry has determined that the TC and associated components are operable. When off, indicates one of the following: 1. TC is bad. 2. TC has not been installed. 3. DMTU door has not been properly secured.
BITE 2	When on, indicates that the GPDC interface electronics are operable, and the DMTU will operate correctly. When off or blinking, indicates that the DMTU is bad.

Figure 2-8. Digital Memory Unit Bites

2.2 TACTICAL DISPLAY SYSTEM

2.2.1 Introduction. The tactical display hardware is listed in Figure 2-9.

The following components comprise the TDS:

1. Three MPDs
2. One pilot display
3. Two UDGs.

The TDS is the primary means used by the GPDC to present information to the operators. There are three MPDs which, with a few exceptions, can present all pertinent mission data developed within the aircraft. There is one pilot display that is limited to displaying the tactical plot format.

Tactical displays are oriented to true north. The track vector actually displayed reflects the active heading source as listed in the NAV PARAMETERS Tableau. Display of a pure magnetic tactical plot is not desirable as all coordinates are measured/computed as latitude/longitude and significant error would result.

The GPDC outputs digital and analog information that is formatted for operator use through the TDS.

FO-1 through FO-4 show the TDS component locations at each crew station.

The TDS transforms digital and analog signals from the GPDC aircraft systems into pictorial displays of scan converted radar and FLIR. The TDS also presents words, numbers, and a tactical plot depicting aircraft, remote sonobuoy, and contact positions; lines of bearing; range; radius; and other graphic symbols to illustrate the tactical situation. The TDS interfaces with the GPDC, FLIR, and radar (Figure 2-11.)

The ESM, navigation, search stores armament, communications, and INCOS systems do not communicate directly with the TDS. Instead, these systems send data to the GPDC which converts these data to a format compatible with the TDS. The operator accesses these data through the INCOS.

The GPDC sends commands to the UDGs, which interprets them, determine the TDS operation mode, and generate the requested symbols or displays. The UDGs, under GPDC control, also regulate the data source from FLIR and radar to allow direct interface between these systems and the TACCO, SENSO, and COTAC displays.

The pilot display is slaved to the GPDC TACCO output through the UDG 1. The COTAC MPD receives video from UDG 2 and additionally receives signals directly from the FLIR and radar scan converter. The TACCO and SENSO MPDs display video from UDG 1 and UDG 2, respectively, and additionally receive data from the FLIR and radar scan converter.

2.2.2 Universal Display Generator. Two UDGs, located in the top left internal avionics rack, are stand-alone microprocessors capable of driving the TACCO, SENSO, pilot and COTAC displays (Figure 2-10). The tactical display system interface, Figure 2-11, shows the interface between the UDGs, the GPDC, and the tactical displays. Power is supplied by the DISPLAY GENERATOR power switch located on the TACCO overhead panel.

The UDGs generate graphic symbols including alphanumerics (letters and numbers), conics (curved lines), and vectors (straight lines). These graphic symbols are sent to each MPD and the pilot display. However, the UDGs do not send all data types to all displays. Data display capabilities for the four TDS display units are summarized in Figure 2-12. The UDGs also position all video data in the proper location on each display.

The UDGs provide an interface between the digital data generated by the GPDC and the analog data required by the displays in order to display video information on the four display units. Each UDG consists of two independent and identical channels. The UDG software resides within each of these channels. Two UDGs form a DGG that is part of the TDS. TDS control is provided by the GPDC. The GPDC provides display data and control commands to the various UDG channels through three Type II serial data channels. A fourth Type II channel is available, but currently unused. Each Type II has access to two data buffers within the GPDC, buffers A and B.

Data transfer for both the TACCO (A buffer) and pilot (B buffer) displays is provided on one Type II channel. In this case, the two channels within a UDG operate in a master/slave mode with the TACCO display always having priority (Figure 2-11). Each UDG channel can drive any of the four displays; however, in a degraded mode switching for the UDG channels is not provided. Thus, if a display is lost because of a UDG channel failure, the display will stay lost unless the cables are switched. This is not a recommended in-flight procedure.

TYPE DESIGNATOR	NOMENCLATURE	COMMON TERMINOLOGY	LOCATION
CV-3853A/ASA-82B	Digital-to-Analog Converter	Universal Display Generator (UDG)	Left avionics rack
IP-1051/ASA-82	Tactical Indicator	Pilot Display	Pilot right center instrument panel
IP-1053/ASA-82	Tactical Indicator	COTAC Multipurpose Display (MPD)	COTAC left center instrument panel
IP-1054/ASA-82	Tactical-Acoustic Indicator	TACCO Multipurpose Display (MPD)	TACCO center panel
IP-1054/ASA-82	Tactical-Acoustic Indicator	SENSO Multipurpose Display (MPD)	SENSO center panel

Figure 2-9. Tactical Display System Components

There are two operating modes for the UDG. In the data frame processing mode, the UDG receives from the GPDC all data currently requiring display by the TDS. The second operating mode is the selective buffer update mode. Rather than sending all data that needs to be displayed, the GPDC only transmits new display information or an update to old display information. The GPDC, by only transmitting information when it has changed, allows the UDG to be ready to accept and process data at a greater rate.

2.2.3 Displays

2.2.3.1 Pilot Display. The pilot display presents the key elements of the TAC PLOT, Harpoon targeting data, ESM threat warning, selected alerts, and peripheral readout information.

The data presented on the pilot display is produced by the GPDC, and is controlled by the crewmembers through their INCOS trays/panels.

The basic pilot display format is shown in Figure 2-13.

The pilot TDS components and interface are listed in Figure 2-14.

2.2.3.2 COTAC MPD. The COTAC display system provides video presentations of:

1. Alerts and cues from the GPDC
2. Tableaus containing GPDC stored data
3. Tactical plot (TAC PLOT) composed of symbols, vectors, and conics
4. FLIR
5. Scan-converted radar
6. Test patterns.

The basic COTAC MPD display format is shown in Figure 2-15. The tableau area on the COTAC MPD displays one-half of a page of tableau at a time.

The COTAC TDS components and their interfaces are listed in Figure 2-16.

2.2.3.3 TACCO MPD. The TACCO display system provides video presentations of:

1. Alerts and cues from the GPDC
2. Tableaus containing GPDC stored data
3. TAC PLOT composed of symbols, vectors, and conics
4. FLIR
5. Scan-converted radar
6. Test patterns.

The TACCO and SENSO MPD display formats are identical (Figure 2-17).

The TACCO tactical display system components and their interfaces are listed in Figure 2-18.

2.2.3.4 SENSO MPD. The SENSO display system provides all video presentations listed in the TACCO display system description listed in Figure 2-19.

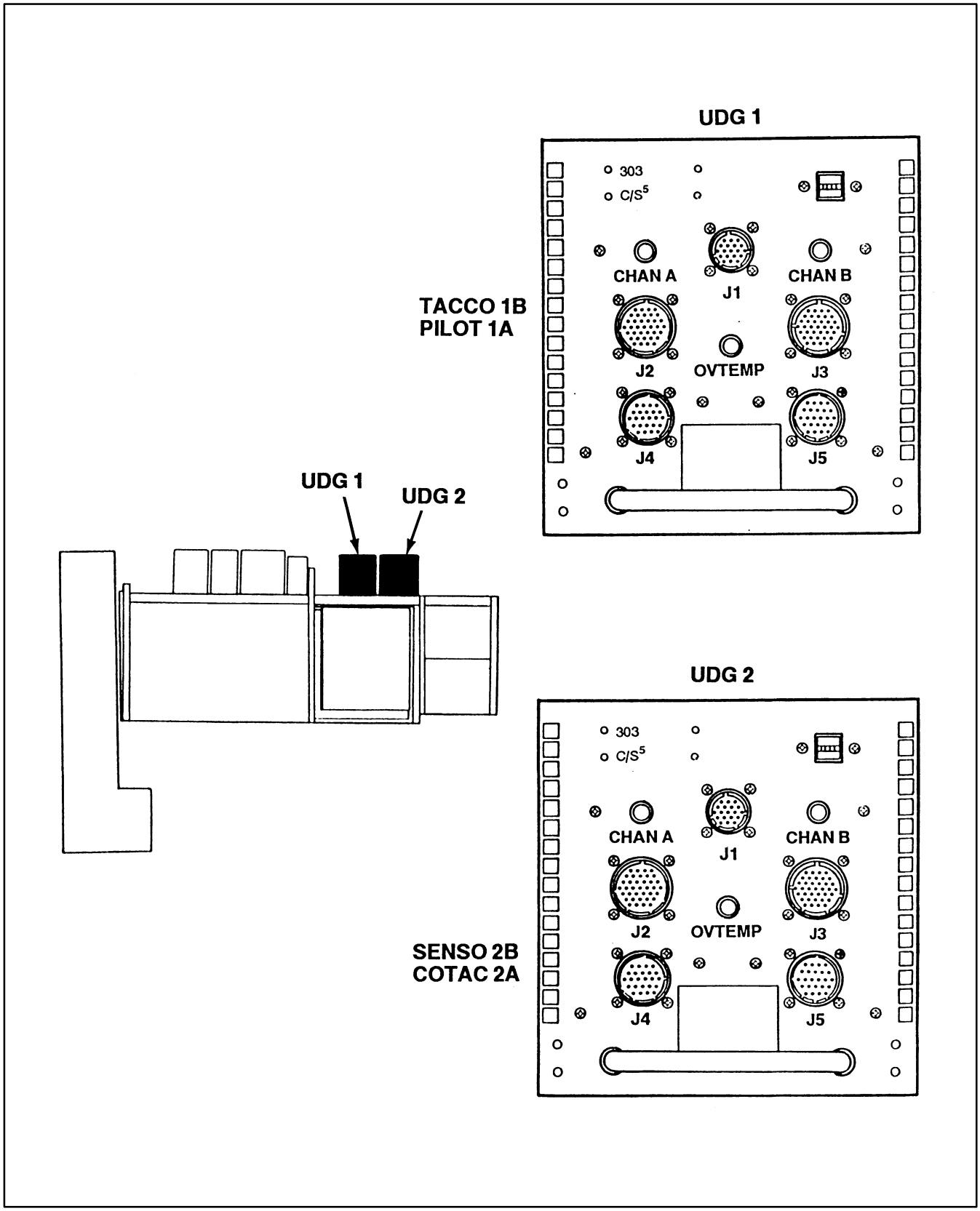

Figure 2-10. Universal Display Generator Location in Left Internal Rack

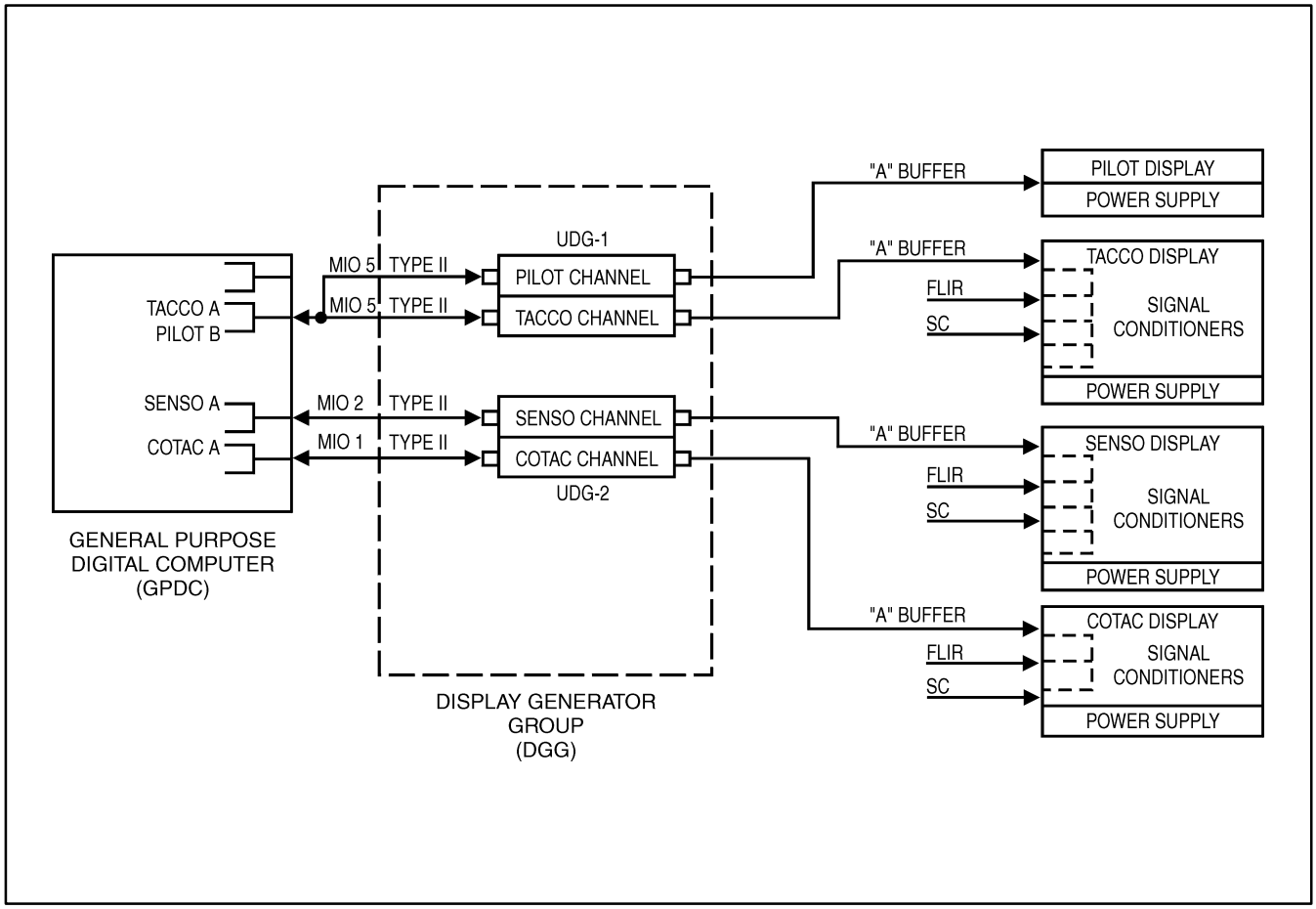

Figure 2-11. S-3B Universal Display Generator Configuration

DATA	TACCO MPD	SENSO MPD	COTAC MPD	PILOT DISPLAY
Alerts and Cues	X	X	X	Alerts only
Tactical Plot	X	X	X	X
Test Patterns	X	X	X	X
Tableaus	X	X	X	
FLIR	X	X	X	
S/C Radar	X	X	X	

Figure 2-12. Tactical Display System Capabilities

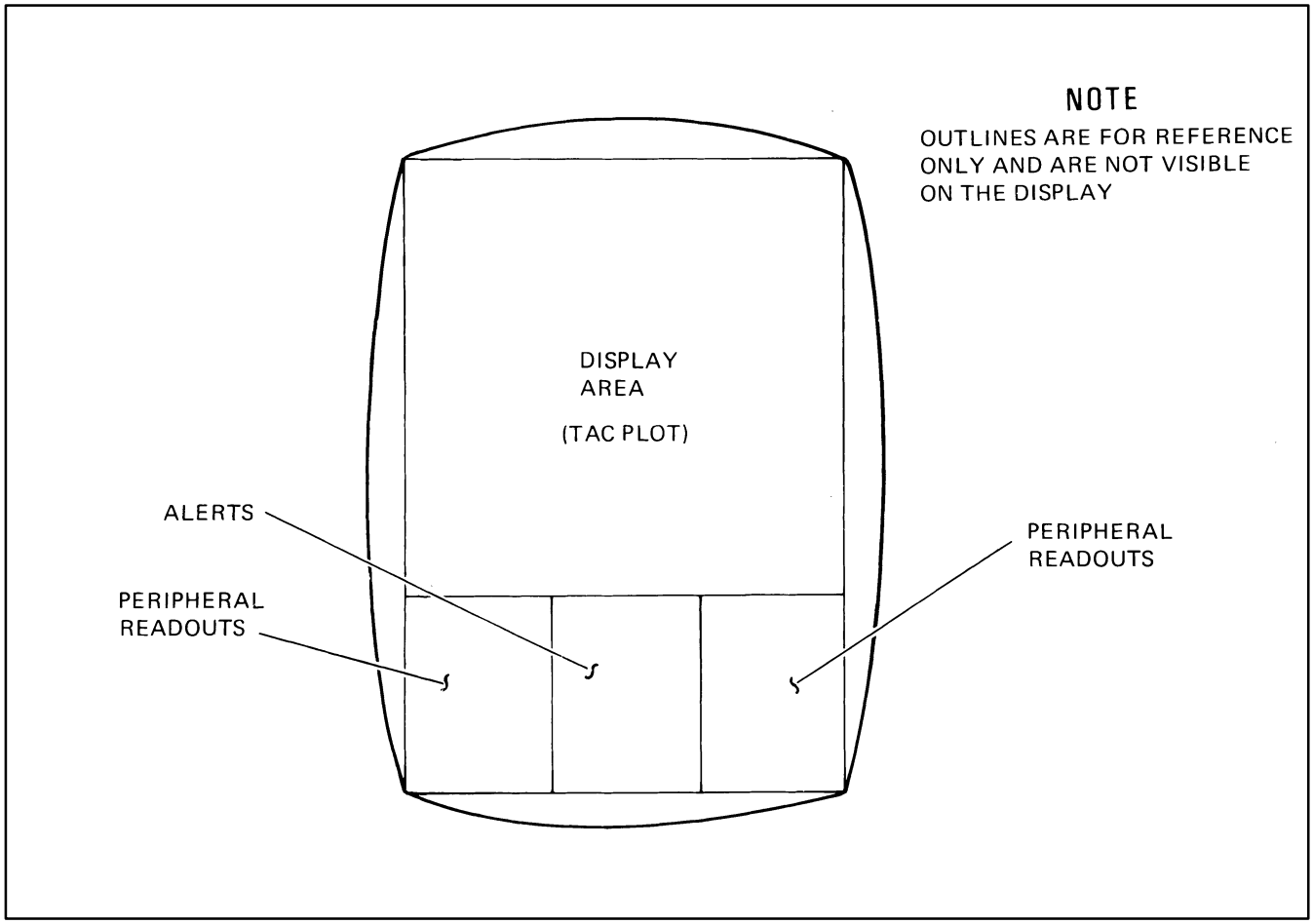

Figure 2-13. Pilot Display Format

TYPE DESIGNATOR	NOMENCLATURE	COMMON TERMINOLOGY	LOCATION
IP-1051/ASA-82	Tactical Indicator	Pilot Display	Pilot center instrument panel
CV-3853A/ASA-82B	Digital-to-Analog Converter	Universal Display Generator (UDG)	Left avionics rack
PILOT TACTICAL DISPLAY SYSTEM INTERFACES			
C-8862/ASQ-147	Control Panel	Pilot Display Control	Pilot left console

Figure 2-14. Pilot Tactical Display System Components and Interfaces

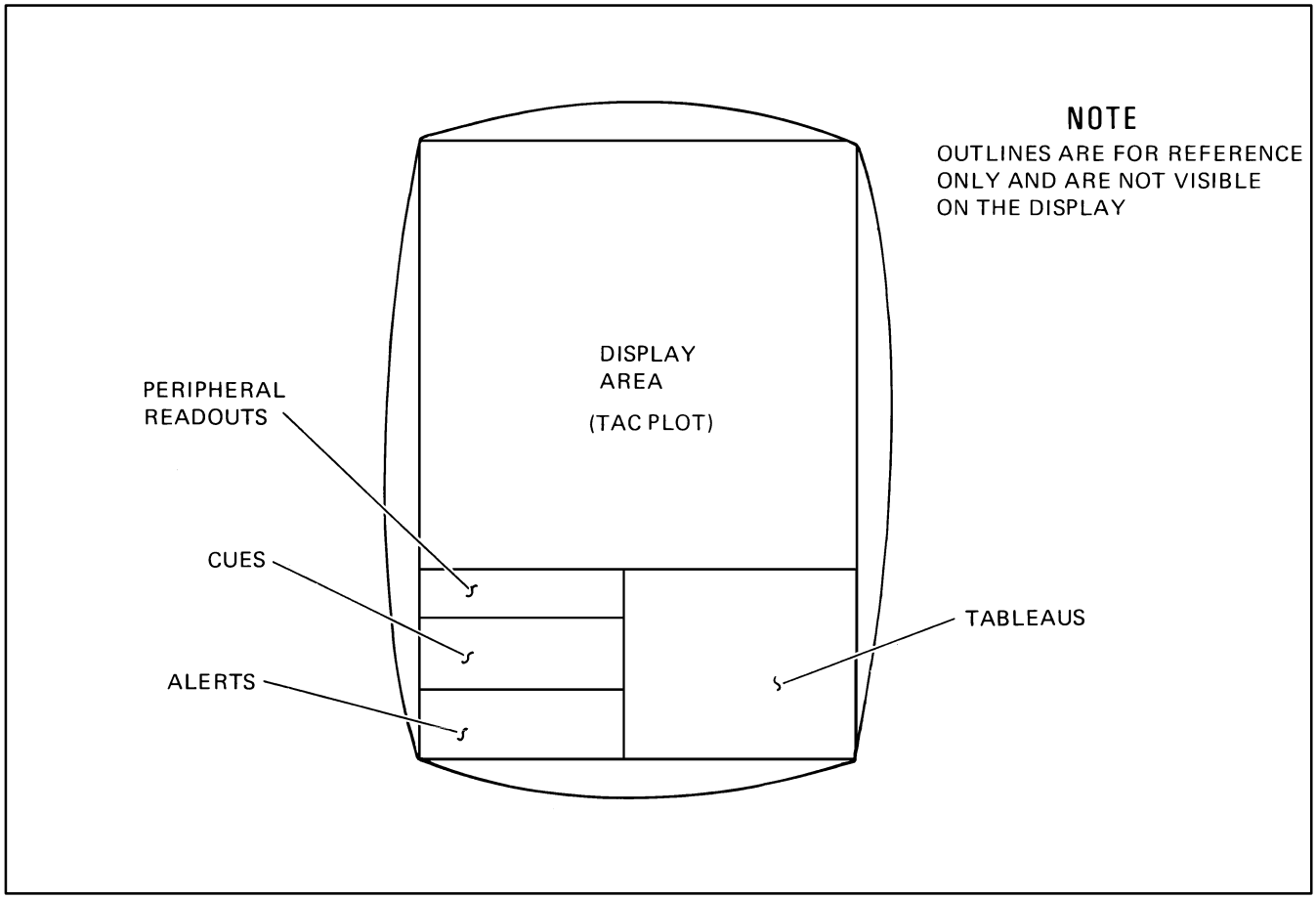

Figure 2-15. COTAC MPD Format

TYPE DESIGNATOR	NOMENCLATURE	COMMON TERMINOLOGY	LOCATION
IP-1053/ASA-82	Tactical Indicator	COTAC Multipurpose Display Unit (MPD)	Left center of COTAC instrument panel
CV-3853A/ASA-82B	Digital-to-Analog Converter	Universal Display Generator (UDG)	Left avionics rack
COTAC TACTICAL DISPLAY SYSTEM INTERFACES			
C-8859/ASQ-147	Computer Indicator Control	COTAC INCOS Control Panel	Right console in COTAC station.
AN/AYK-23(V)	Digital Computer	General Purpose Digital Computer (GPDC)	Aft section of internal electronics bay

Figure 2-16. COTAC Tactical Display System Components and Interfaces

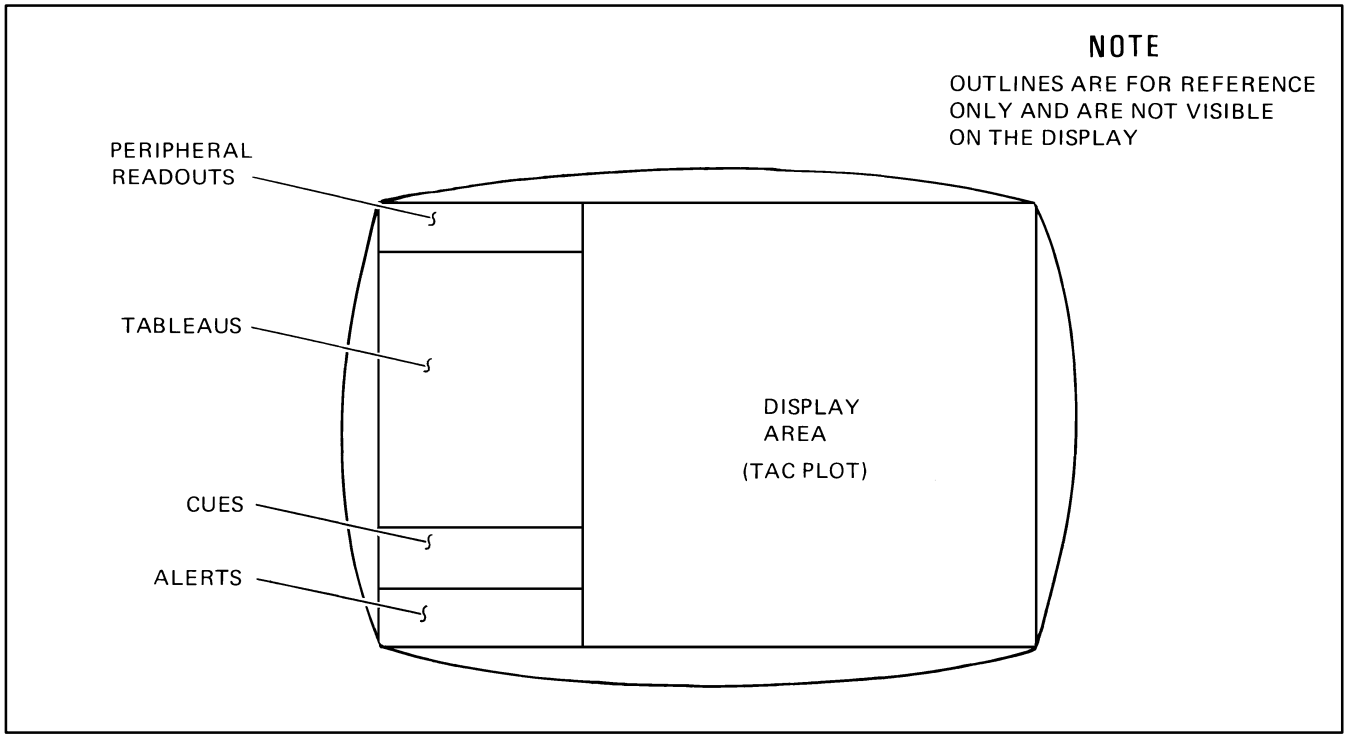

Figure 2-17. TACCO/SENSO MPD Format

TYPE DESIGNATOR	NOMENCLATURE	COMMON TERMINOLOGY	LOCATION
IP-1054/ASA-82	Tactical Indicator	TACCO Multipurpose Display Unit (MPD)	TACCO station
CV-3853A/ASA-82B	Digital-to-Analog Converter	Universal Display Generator (UDG)	Left avionics rack
TACCO TACTICAL DISPLAY SYSTEM INTERFACES			
C-8860/ASQ-147	Computer Indicator Control	INCOS Tray	TACCO station
AN/AYK-23(V)	General Purpose Digital Computer	GPDC	Aft section of internal electronics racks

Figure 2-18. TACCO Tactical Display System Components and Interfaces

TYPE DESIGNATOR	NOMENCLATURE	COMMON TERMINOLOGY	LOCATION
IP-1054/ASA-82	Tactical Indicator	MPD	SENSO station
CV-3853A/ASA-82B	Digital-to-Analog Converter	UDG	Left avionics rack
SENSO DISPLAY SYSTEM INTERFACES			
AN/AYK-23(V)	General Purpose Digital Computer	GPDC	Center internal bay
C-8861/ASQ-147	Computer Indicator Control	INCOS Tray	SENSO station

Figure 2-19. SENSO Display System Components and Interfaces

2.2.4 Display Off-Line Controls. Adjacent to each display is a panel with switches that control display power; adjust display brightness, focus, and contrast; and conduct off-line testing of each display (BITE). The display becomes stable in less than 2 minutes after power application. The control panels, the functional description, and test patterns are shown in Figures 2-20 through 2-25.

2.2.5 Power Control Panel. The power control panel (Figure 2-27) applies power to the computer group and the DMTU when the COMPUTER GROUP switch is placed in the ON position and will initiate a computer Start-Up Built In Test (SBIT) of approximately 60 seconds in duration. At the completion of SBIT, the SEL PROGRAM cue will be displayed on the MPD.

Note

The COMPUTER RESTART momentary switch initiates the loading of the operational program into the GPDC when placed in the ON position by displaying the SEL PROGRAM cue on the MPD. This switch is locked out during SBIT and should only be used for program reloads.

2.3 OPERATIONAL PROGRAM LOADING

2.3.1 Normal Load Procedures

CAUTION

To prevent damage to the TC, ensure the COMPUTER GROUP switch on the power control panel is in the OFF position or the DGTL MAG TAPE circuit breaker (1-I-7) is pulled before TC insertion or removal.

1. Transportable cartridge installation.

   a. Turn two knurled fastener knobs located at the right-hand side of the DMTU front panel to the fully counterclockwise (disengaged) position and open the TC access door to the fully open position.

   b. Carefully insert the removable TC into the DMTU TC cavity. Ensure that the connector located at the bottom rear panel of the TC is firmly seated.

   c. Close the TC access door and turn two knurled fasteners on the DMTU front panel to the fully clockwise (engaged) position.

   d. Reapply power to the DMTU by setting the DGTL MAG TAPE circuit breaker (1-I-7, left-hinged circuit breaker panel) to the ON position.

2. APU — ON.

3. APU generator switch/air-conditioning switch — ON.

4. The following is the recommended loading procedure:

   a. Display generator power switch — ON.

   b. Display — ON/TEST.

   c. COMPUTER GROUP switch — ON.

Note

The computer group switch will apply power to the computer and initiate SBIT followed by a system load.

   d. ESM switch — AS REQUIRED.

Once GPDC is successfully loaded and both engines are on line:

5. MPDs — OFF.

6. Power transients — EXECUTE.

Note

If power transients are conducted while the DMTU is attempting to read track 1, 3, or 7 peripheral software may be corrupted. Verify that the TC is on track 2, 4, or 6 prior to executing transients.

7. MPDs — ON.

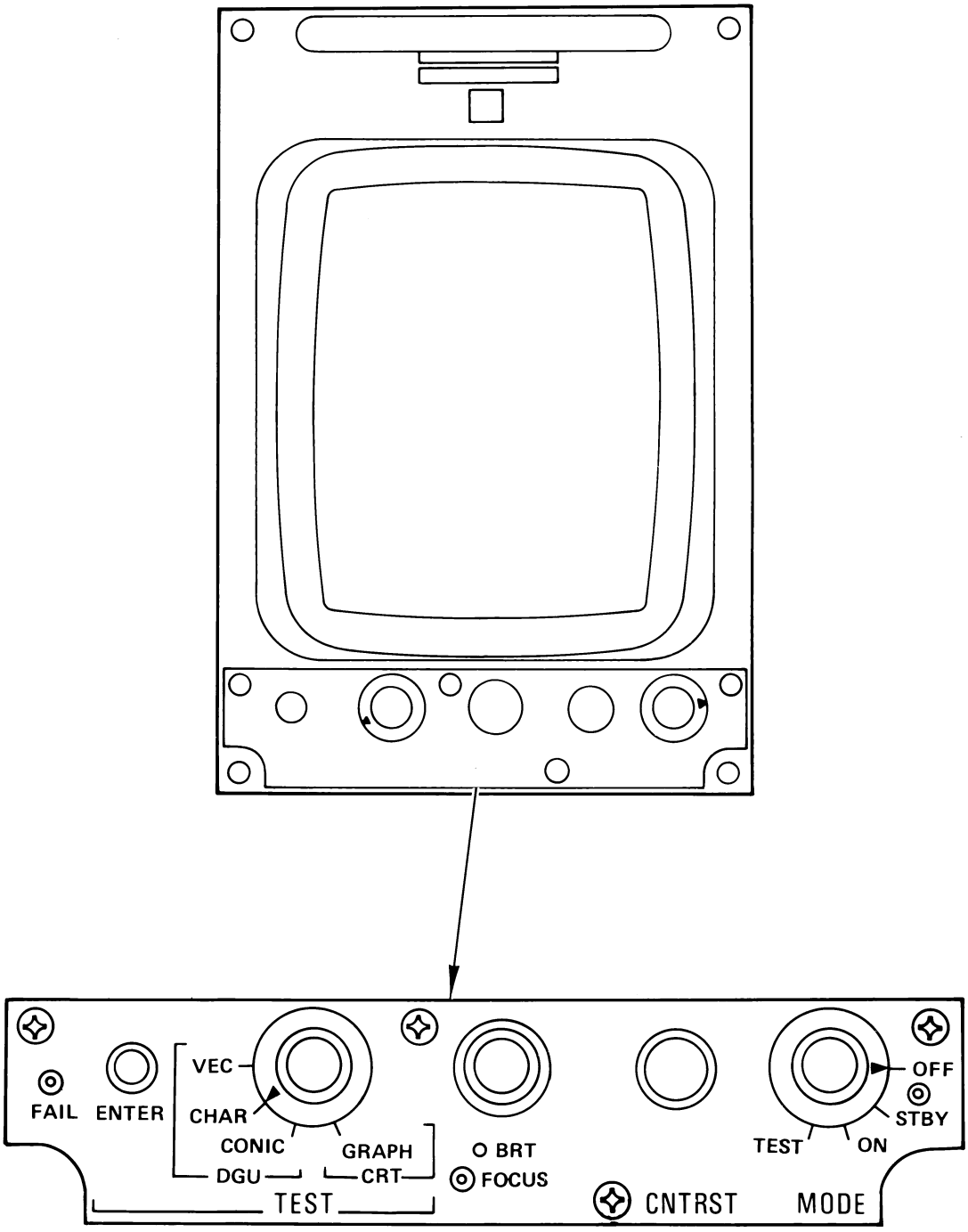

Figure 2-20. Pilot Display Off-Line Controls (Sheet 1 of 2)

CONTROL	FUNCTION
FAIL indicator	The FAIL indicator is set (white flag) by pressing ENTER with the TEST switch in the GRAPH position.
ENTER pushbutton	ENTER is enabled when the MODE switch is in the TEST position. Pressing ENTER when the TEST switch is in any of the DGU (UDG) positions, initiates a UDG self-test on the pilot channel.
TEST switch	The TEST switch is a four-position, rotary switch divided into two bracketed sections: UDG and CRT.
DGU (UDG) section:	The DGU (UDG) section enables a test of the UDG graphic generations and displays the composites test pattern (Figure 2-23). The test and display are enabled in any of three switch positions in the UDG section. The switch positions within the UDG section are used to report three different types of failure: VEC, CHAR, and CONIC.
VEC	Used to report a failure in the vector generator (ENTER is then pressed).
CHAR	Used to report a failure in the character generator (ENTER is then pressed).
CONIC	Used to report a failure in the conic generator (ENTER is then pressed).
CRT section:	
GRAPH	Generates CRT graph test pattern (see Figure 2-24). Reports a failure of the display when ENTER is pressed.
BRT control	BRT (inner knob) controls the display brightness.
FOCUS control	FOCUS (outer knob) controls the display image sharpness.
CNTRST control	Controls the display contrast. Effectively functions the same as the brightness control.
MODE switch:	
OFF	Disconnects power from the display and resets the power indicator flag black.
STBY	Applies filament power to the display and sets the power indicator flag white. (It is not necessary to stop at STBY.)
ON	Places the display in full on-line operation with the GPDC.
TEST	Connects the FAIL indicator, ENTER pushbutton, and the rotary TEST switch into the circuit.

Figure 2-20. Pilot Display Off-Line Controls (Sheet 2)

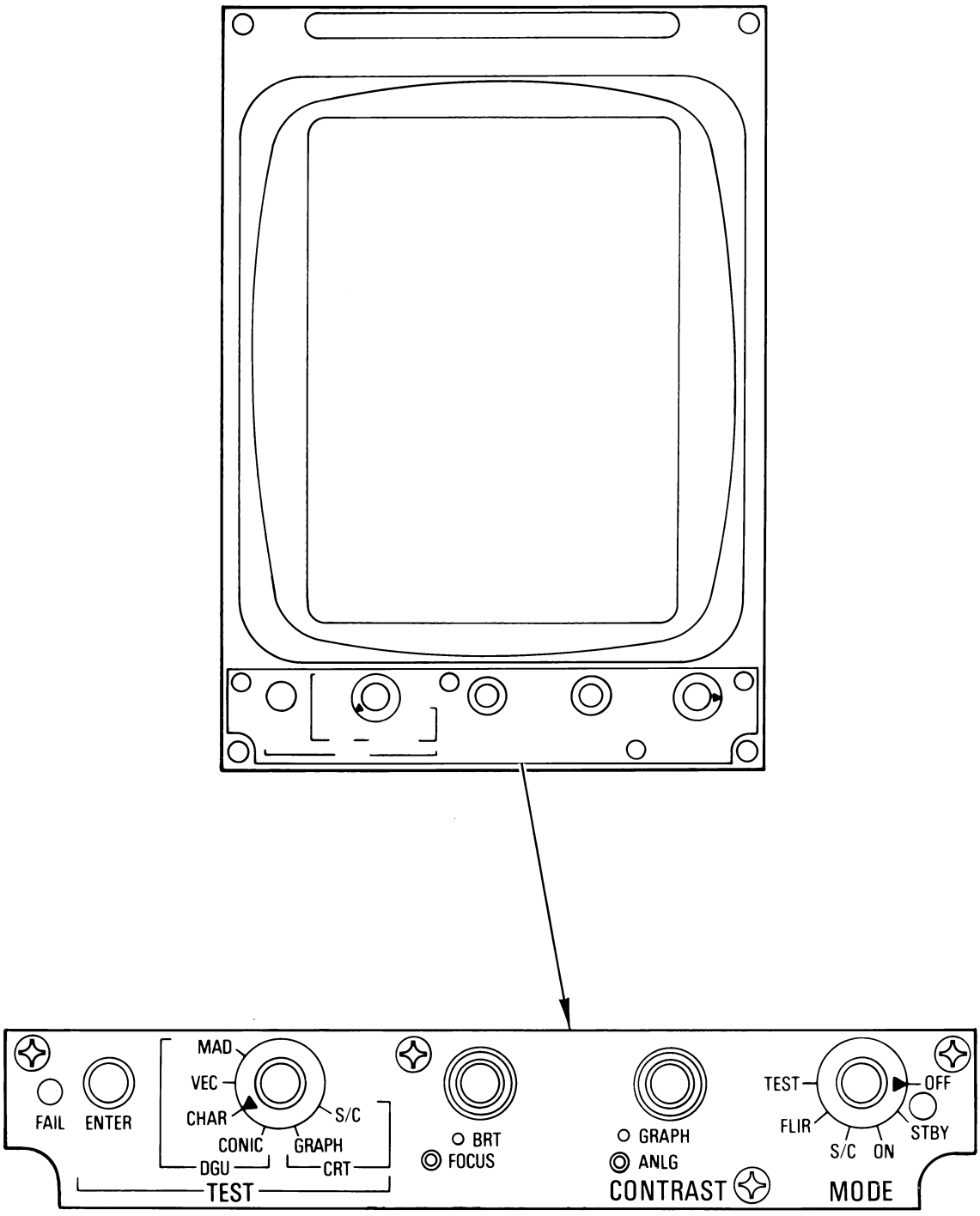

Figure 2-21. COTAC MPD Off-Line Controls (Sheet 1 of 2)

CONTROL	FUNCTION
FAIL indicator	The FAIL indicator is set (white flag) by pressing ENTER with the TEST switch in the GRAPHIC or S/C position.
ENTER pushbutton	ENTER is enabled when the MODE switch is in the TEST position. Pressing ENTER when the TEST switch is in any of the DGU (UDG) positions initiates a UDG self-test of the COTAC channel.
TEST switch:	Functions same as TEST switch on pilot display.
DGU (UDG) section	When the TEST switch is in any one of the four DGU (UDG) positions, the composite test pattern is displayed (Figure 2-23).
MAD	Used to report a failure of the MAD display portion of the composite test pattern.
VEC	Used to report a failure of the vector position of the composite test pattern.
CHAR	Used to report a failure in the character generator when ENTER is pressed.
CONIC	Used to report a failure in the conic generator when ENTER is pressed.
CRT section:	
GRAPH	Generates CRT graph test pattern (see Figure 2-24). Reports failure in the display to the GPDC when ENTER is pressed. The FAIL indicator is set (white flag) on the display control panel.
S/C	Generates CRT S/C test pattern (see Figure 2-24). Reports failure to GPDC when ENTER is pressed. The FAIL indicator on display control panel is set (white flag).
BRT control	BRT (inner knob) controls the display brightness.
FOCUS control	FOCUS (outer knob) controls the display image sharpness.
CONTRAST control:	
GRAPH	GRAPH (inner knob) controls the contrast of the graphic video (symbols, vectors, and conics).
ANLG	ANLG (outer knob) controls the contrast of the analog video (radar and FLIR).
MODE switch:	
OFF	Disconnects power from the display and resets power indicator flag back.
STBY	Applies filament power to the display and sets the power indicator flag white. (It is not necessary to stop at STBY.)
ON	Places the display in full on-line operation with the GPDC.
S/C	Provides a Scan-Converted (S/C) radar display in the event of failure of the normal control circuitry.
FLIR	Provides FLIR display in the event of failure of the normal control circuitry.
TEST	Connects FAIL indicator, Enter pushbutton, and rotary TEST switch in the circuit for test purposes.

Figure 2-21. COTAC MPD Off-Line Controls (Sheet 2)

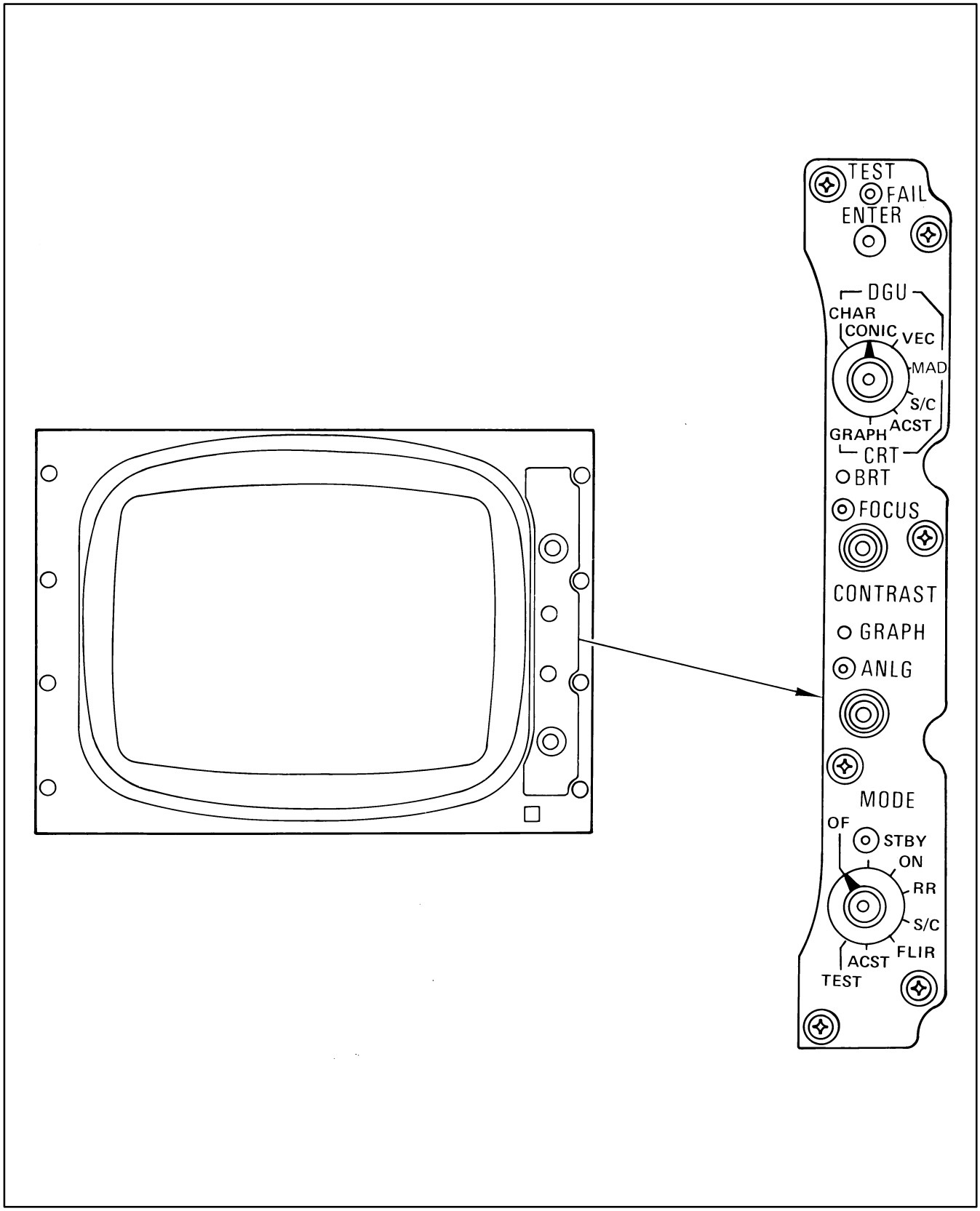

Figure 2-22. TACCO/SENSO MPD Off-Line Controls (Sheet 1 of 3)

CONTROL	FUNCTION
FAIL indicator	Indicator is set (white center) by pressing ENTER with MODE switch in TEST and rotary test switch in any CRT section position.
ENTER button	ENTER is enabled in the MODE switch TEST position. Pressing ENTER when the TEST switch is in any of the DGU (UDG) positions initiates a self-test of the respective UDG channel.
TEST switch:	Functions same as TEST switch on pilot display.
DGU (UDG) section:	When the TEST switch is in any position within the DGU (UDG) sections, the composite test pattern is displayed (see Figure 2-23).
CHAR	Generates composite test pattern (see Figure 2-23). Reports failure in character generator to GPDC and sets UDG BITE indicator when ENTER is pressed.
CONIC	Same as CHAR above. Reports failure of conic generator to GPDC and sets UDG BITE indicator when ENTER is pressed.
VEC	Same as CHAR above. Reports failure in vector generator and sets UDG BITE indicator when ENTER is pressed.
MAD	Same as CHAR above. Reports failure in MAD generation to GPDC and sets UDG BITE indicator when ENTER is pressed.
CRT section:	
S/C	Generates CRT/S/C test pattern (Figure 2-24). Reports a failure to the GPDC and sets display FAIL indicator by pressing ENTER.
ACST	Generates CRT ACST test pattern (Figure 2-25). If a faulty pattern results, the operator reports a failure by pressing ENTER, reports the failure to GPDC, and sets FAIL indicator on display control panel.
GRAPH	Generates CRT graph test pattern as shown in Figure 2-24. Reports a failure (discrepancy between display and pattern as shown in Figure 2-24) to the GPDC and sets FAIL indicator (white flag) on display control panel.
BRT Control	The BRT (inner) controls the display brightness.
FOCUS control	The FOCUS (outer) controls the display clarity.
CONTRAST control:	
GRAPH	The GRAPH (inner) controls the contrast of the graphic video (symbols, vectors, conics).
ANLG	The ANLG (outer) controls the contrast of the analog video (radar, FLIR, acoustics).
MODE switch:	
OFF	Disconnects power from display. Resets power indicator flag black.
STBY	Applies filament power to display and sets power flag white. (It is not necessary to stop at STBY.)
ON	Places display in full on-line operation with the GPDC.
RR	Not functional.
S/C	Provides Scan-Converted (S/C) radar display (off-line) in the event of a failure in the normal control circuitry.
FLIR	Provides FLIR display (off-line) in the event of a failure in the normal control circuitry.

Figure 2-22. TACCO/SENSO MPD Off-Line Controls (Sheet 2)

CONTROL	FUNCTION
ACST	Provides test display symbology when in test mode of MPD. **Note** Selecting RR, S/C, FLIR, or ACST on TACCO MPD MODE switch will cause the pilot to lose his MPD display. Pilot MPD display will be regained when TACCO MODE switch is placed back to the ON position.
TEST	Energizes the BITE system and connects TEST FAIL indicator, ENTER push-button, and rotary TEST switch into circuit.

Figure 2-22. TACCO/SENSO MPD Off-Line Controls (Sheet 3)

WARNING

The COMM and NAV IND SYSTEMS TESTS (SAT) in the System Test Program shall not be used while airborne either individually or as a group when included under the selection of ALL SAT. The COMM SAT will render aircraft voice communications inoperable for several minutes. The NAV IND SAT will adversely affect attitude/heading sources such that loss of IMC flight capability could result.

The initial load process begins when the power is applied to the AYK-23(V) via the Computer Group Switch. Following the application of computer power, the AC and DC power indicators on the AYK-23(V) maintenance panel (MP), located on the front of the computer (see Figure 2-26), will be illuminated and SBIT will be executing. SBIT execution will be indicated by the BIT light illumination and a B1 in the BIT Control display window. During SBIT, the restart switch is locked out. Within 60 seconds, SBIT will terminate and the BIT light and display will be extinguished. The AYK-23 then will attempt to boot the operational program. On initial load, the AYK-23 boots from the TC via the DMTU. If a failure occurs with either the TC or DMTU, the boot will fail and a BF will be indicated in the MP control display window.

Note

If a BF failure is encountered, verify that the TC is properly seated and the DMTU circuit breakers are in. If a code other than B1 or BF is encountered, then an SBIT failure has occurred and maintenance personnel should be consulted.

The bootstrap/embedded firmware program loads the System Loader. The System Loader verifies that the GMA is functional, and initializes the remainder of the circuit cards and the SEL PROGRAM cue to be displayed. When the operator chooses OPERATIONAL and responds to the remaining cues, the Operational Program (TRK 3) and Preflight Inserted Data (TRK 3) are loaded into the GMA. TMP OP LOAD is transferred to the appropriate GPC and the Executive subprogram initializes the system.

SEL PROGRAM
1 OPERATIONAL
2 OPERATIONAL CONT
3 SYSTEM TEST
4 GPDC DIAG RECYCLE
5 FIRMWARE

During the Operational Load, the following advisory alert is displayed:

OPERATIONAL LOAD

A cue enables the operator to select the applicable navigation suite onboard the aircraft in the event that both NIU/NDCR channels are defective. An incorrect response to this loading cue will not affect proper NAV configuration initialization if there is at least one non–defective NIU/NDCR channel.

SEL NAV CONFIG
1 NIU
2 NDCR

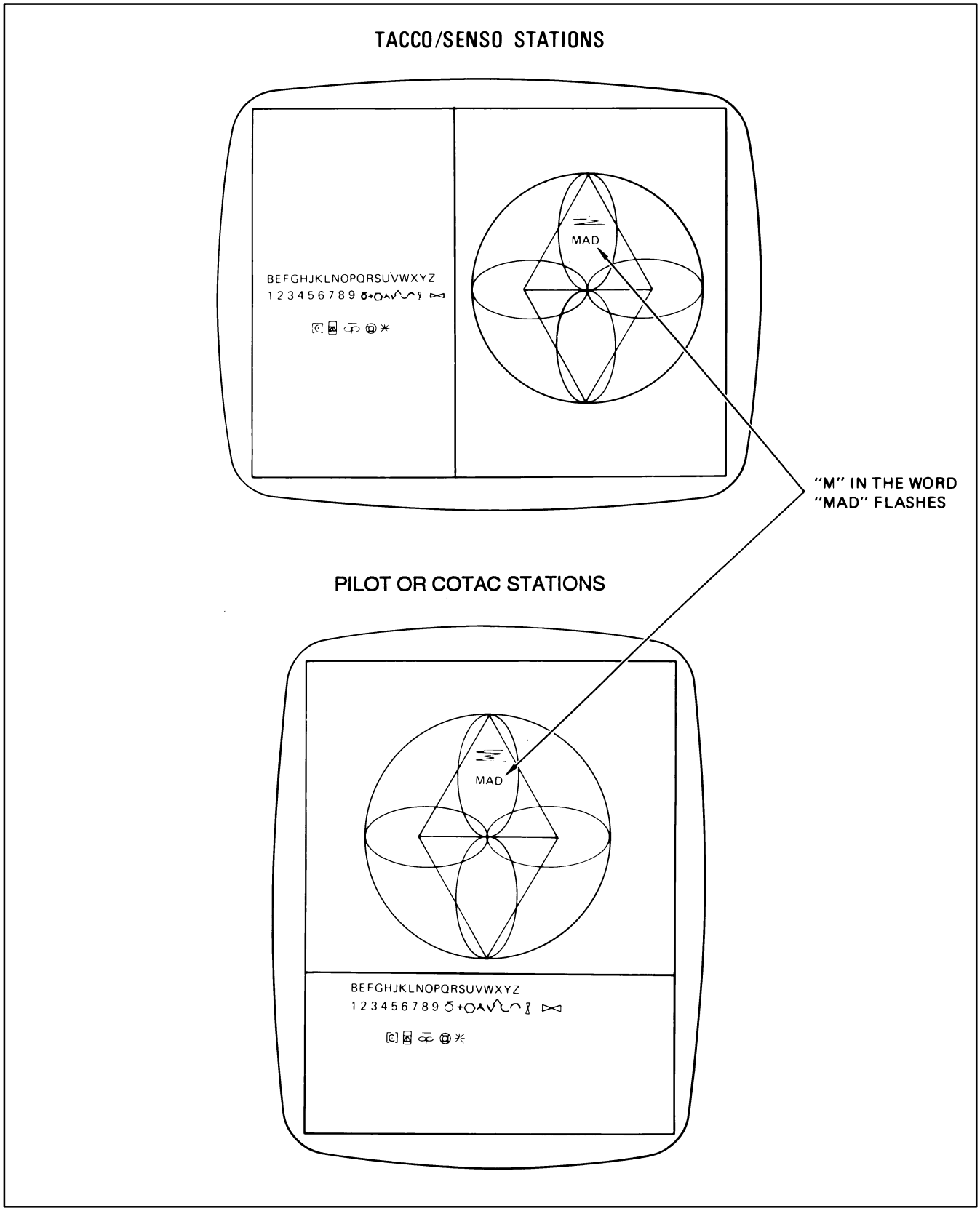

Figure 2-23. UDG Test Patterns

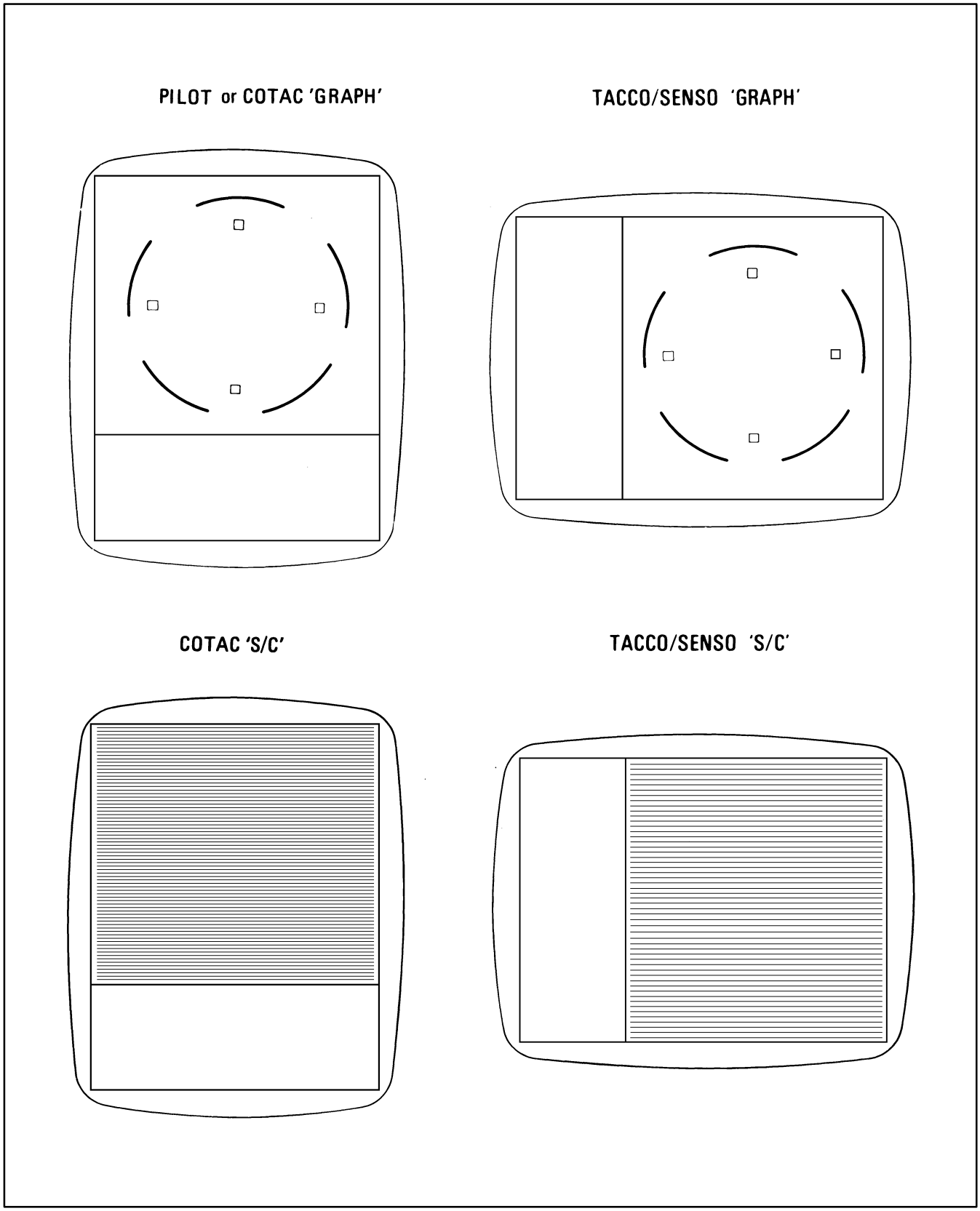

Figure 2-24. CRT Test Patterns

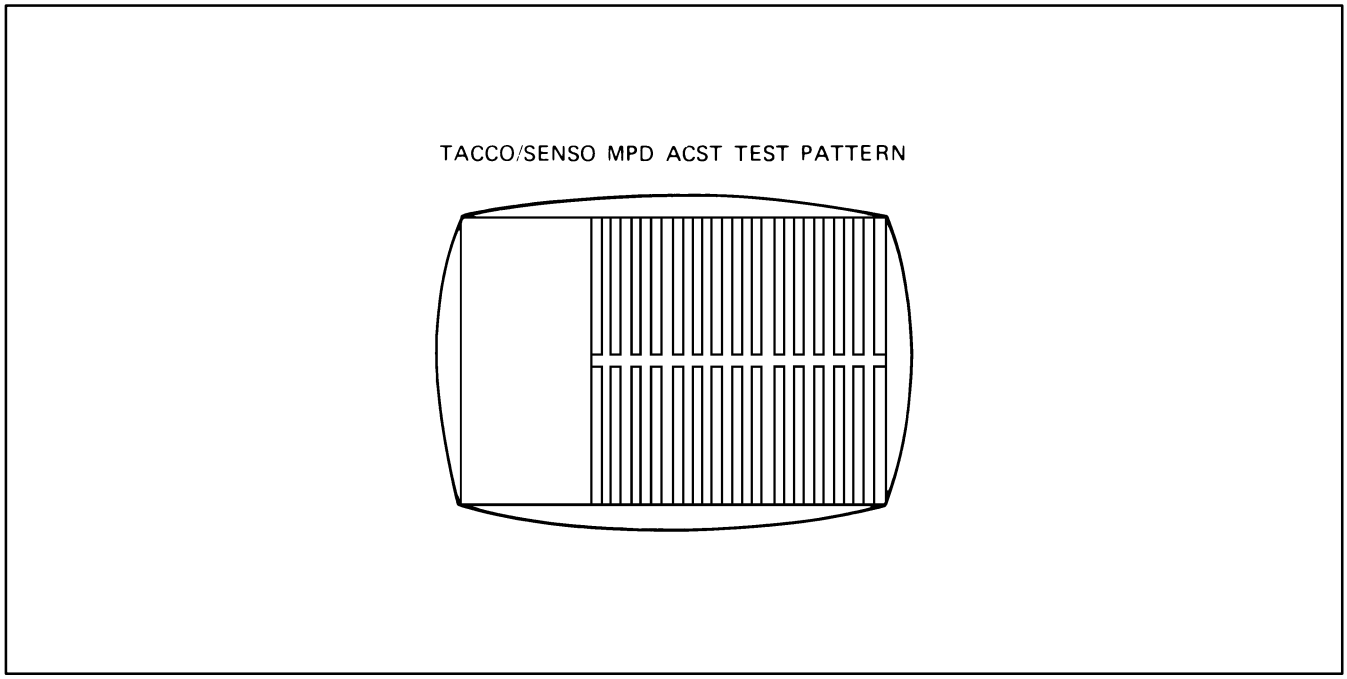

Figure 2-25. CRT Acoustic Test Patterns

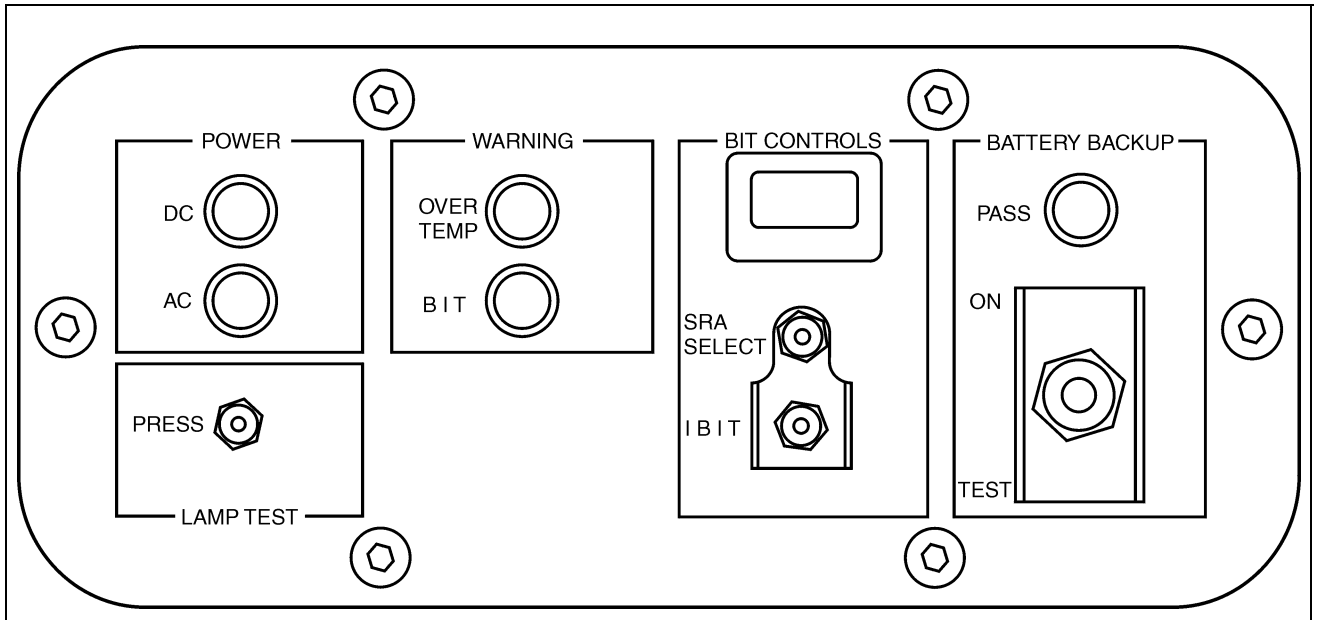

IDENTIFICATION	TYPE	FUNCTION
POWER		
DC	Indicator	Illuminates when the DC power system is functioning normally. The indicator extinguishes when one or more regulators indicate a power supply BIT failure. The power supply BIT circuitry within each regulator detects over-voltage and under-voltage conditions.

Figure 2-26. AN/AYK-23(V) Maintenance Panel (Sheet 1 of 2)

IDENTIFICATION	TYPE	FUNCTION
POWER (cont.)		
AC	Indicator	Illuminates when the AC power system is functioning normally. The indicator extinguishes when AC power is removed from one or both sides of the AN/AYK-23(V) or when a failure is detected in the power conditioner assembly.
LAMP TEST PRESS	Push-button switch	While depressed, illuminates all indicators and all segments of the alphanumeric two-digit display.
WARNING		
OVERTEMP	Indicator	Illuminates when one or more of the four remote temperature sensors detects a temperature in excess of 70 °C (158 °F). The overtemperature indicator remains illuminated until temperature has returned to normal within the AN/AYK-23(V).
BIT	Indicator	Illuminates during the execution of the initiated built-in test (IBIT) or the start-up, built-in test (SBIT) and remains illuminated if one or more modules fail testing. To determine if IBIT or SBIT has failed, the maintainer must observe the maintenance panel two-character display.
BIT CONTROLS	Two-Character LED Display	The two-digit display indicates the operational condition of the AN/AYK-23(V). If a BIT failure is detected, then a two-digit code is displayed to indicate a module or assembly failure.
SRA SELECT	Push-button switch	When depressed, causes the two hex character LED display to cycle through fault information provided by the BIT firmware. With the use of this switch, the maintainer can determine all of the causes of a failure.
IBIT	Push-button switch	When depressed, causes the execution of the initiated built-in test.
BATTERY BACKUP		
ON/OFF/TEST	Three-position toggle switch	Not used.
PASS	Indicator	Not used.

Figure 2-26. AN/AYK-23(V) Maintenance Panel (Sheet 2)

For an automatic reload performed by common recovery (CR) portion of the executive, this previous cue response is inserted. For the UHF RADIO CHANNLS, cue the following apply during an automatic reload:

1. The cue will be redisplayed and require a new response if there is no SAFE DATA saved.

2. The cue will not be redisplayed when there is at least one block of SAFE DATA that has been saved.

UHF RADIO CHANNLS
1 LOAD FROM TC
2 BYPASS TC LOAD

If the DMTU has trouble reading certain records, the load will take extra time. Displayed track and record numbers indicate loading status.

After the operational program is loaded, the DMTU continues to read track 3 for insertion of preflight data. GPDC initialization is begun and the TC is positioned to start data extraction at the beginning of track 2. Program initialization is then completed with the INIT COMPLETE advisory displayed at all stations. The program is then ready for operator interface. Normal program loading and initialization takes approximately 1 to 2 minutes.

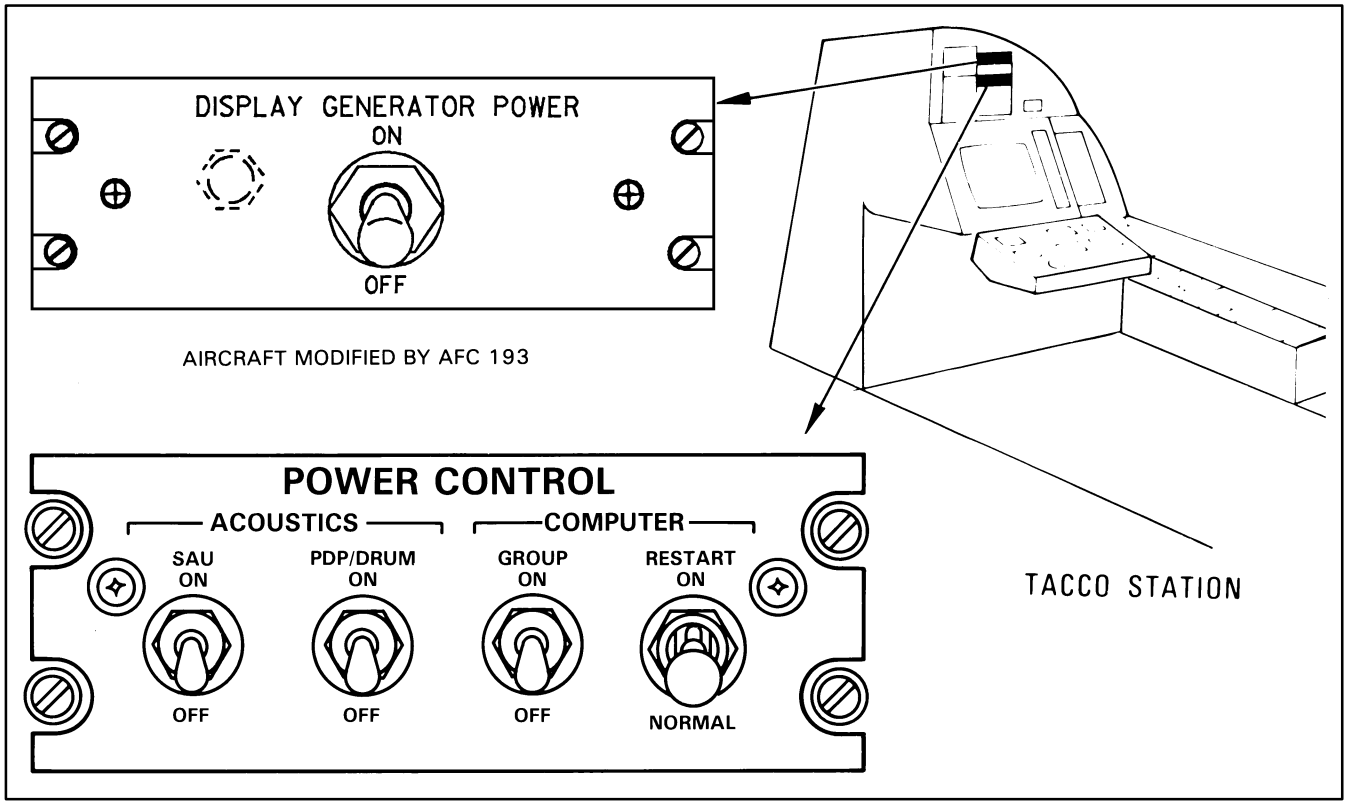

Figure 2-27. Power Control Panel

After the TMP is initialized, the ESM subprogram instructs the executive to load the peripheral software for the subsystem. After loading, the ESM subsystem is initialized. Peripheral software loading utilizes TC tracks 1, 3, and 7 and takes an additional 2 to 3 minutes. Peripheral software loading may be monitored in the DMTU EXPANDED SYSTEM Tableau.

2.3.2 Initialization

WARNING

Failure of a search store decoder may cause an inadvertent sonobuoy release. Prior to program initialization, power to the SES-COS must be removed by pulling the SEARCH STORES POWER and SEARCH STORES CONTROL circuit breakers and leaving the power secured at all times except when actually dropping buoys, when an inadvertent release would not be hazardous, or when single-engine gross weight/ bingo considerations may require jettison of sonobuoy loads.

Initialization is the process of setting the GPDC and peripheral equipment to a predetermined known beginning point. The initialization subprogram initializes the avionics systems after the operational program loader completes the load process. During initialization, the following conditions are set:

1. Displays
   a. 32 nm scale
   b. Aircraft and hook symbols are at the center of the display.
   c. Aircraft symbol is flashing, indicating system navigation has not commenced.
   d. NAVIGATION PREFLIGHT Tableau is displayed at the COTAC station.
   e. INDEX Tableau is displayed at the TACCO and SENSO stations.
2. COTAC INCOS
   a. Matrix select C is available.
   b. PGM CTL (program control) options are available.

3. TACCO INCOS

    a. INCOS is in the TACCO mode.

    b. Matrix A REINIT (reinitialize) options are available.

    c. Matrix B PRGM CONT (program control) options are available.

4. SENSO INCOS

    a. Matrix A REINIT (reinitialize) options are available.

    b. Matrix B PRGM CONT (program control) options are available.

5. Navigation

    a. Not navigating

    b. Latitude indicates current aircraft latitude.

    c. Longitude indicates current aircraft longitude.

    d. Awaiting initial on-top or weight-off-wheel signal to commence navigating.

When this process has been completed, the following system alert is displayed:

INIT COMPLETE

The operational program is now loaded, initialized, and is ready for operator interface. The starting procedure, beginning with placing the COMPUTER POWER switch to ON until the operational program is functioning automatically, takes from 1 to 2 minutes when no malfunctions are encountered.

After the operational program is loaded and initialized, the ESM system is loaded from track 7 from the DMTU. This peripheral software loading and initialization takes an additional 2 to 3 minutes.

2.3.3 Program Loading Faults. This section describes common faults and alerts that may be encountered during a load.

Following the completion of SBIT or upon activation of the COMPUTER RESTART switch, the system firmware attempts to load the SYSTEM LOADER. After selecting the OPERATIONAL option to the SEL PROGRAM cue, the SYSTEM LOADER loads the TMP.

If the SYSTEM LOADER fails to load the TMP, the display will go blank or the following alert will be displayed.

FAIL LOAD

The operator has four options:

1. Start over by reselecting the ON position of the COMPUTER RESTART switch and attempt another load.

2. Cycle the COMPUTER POWER switch and attempt a load following completion of SBIT.

3. Try a different TC.

4. Request assistance from Maintenance.

2.3.4 Operational Continue Reload. An OPERATIONAL CONT program can be loaded through the INCOS RLOAD PRGRM option in the program control matrix. During this load the following advisory alert is displayed:

OP SYSTEM RELOAD

The following mandatory cueing sequence is displayed:

QUICK RELOAD
1. YES
2. NO

If decision 1 is selected, the program is reloaded in the GPC with safe data from GMA. This reload takes approximately 2 seconds.

If decision 2 is selected, the following mandatory cue is displayed:

LOAD SAFE DATA
1. YES
2. NO

If decision 1 is selected, the program is reloaded from DMTU with SAFE DATA and the CLR SYS Status advisory alert is displayed.

If decision 2 is selected, the program is loaded from DMTU with PREFLIGHT DATA and the CLR SYS Status advisory alert is displayed. The following cueing sequence is displayed:

UHF RADIO CHANNLS
1 LOAD FROM TC
2 BYPASS TC LOAD

Response to the UHF RADIO CHANNLS cue requires a keyset entry of a desired number (1 or 2). During an OP CONTINUE reload, the SEL NAV CONFIG cue will not be displayed. UHF RADIO CHANNLS mandatory cue will be redisplayed and requires a new response when a reload is initiated by the RLOAD PRGM option select in the PRGM CONT matrix if no safe data exists or if the LOAD SAFE DATA option is not chosen.

When the operational continue load completes the load process, the following alert appears:

GOOD LOAD

When initialization is complete, the following alert appears:

INIT COMPLETE

2.3.5 Operational Program Degraded Modes. The AYK-23 has no degraded program loads. The GPC and GMA must be functional to allow the operational program to function. If an MIO is lost, the peripherals associated with the MIO card will be lost. Likewise if an HIO is lost, the wing station associated with the HIO card will be lost.

2.3.6 Program/Avionics Shutdown

1. END MSN option — select valid.

Note

Operator should wait until scopes go blank before securing power control panel switches.

2. The following switches should be positioned as indicated:

   a. COMPUTER GROUP — OFF.

   b. ESM — OFF.

   c. Display generator power — OFF.

   d. Displays — OFF.

3. Station off-line controls — OFF.

4. Transportable cartridge — Remove.

CAUTION

Use of excessive force on the TC release lever to release a TC from the DMTU could cause the TC locking pin to jam in the TC locking notch located at the bottom rear of the cartridge. An attempt to pull the TC from the DMTU after this occurs will result in the back of the TC being separated from the unit. If normal force does not move the TC release lever to the release position, the DMTU with the TC installed must be removed from the aircraft and turned into maintenance for repair.

2.3.7 Power Transients. Power transients can be expected during the transition from external to aircraft power and when placing another generator on-line after APU or single-engine avionics startup. GPDC contains circuits that provide data retention voltages and data protection during power transients. When a power transient occurs, necessary voltage will be maintained for at least 50 milliseconds. When power transients can be anticipated, the following procedures should be utilized:

1. Displays — OFF.

2. Power transients — EXECUTE.

3. Displays — ON.

4. SYSTEM STATUS Tableau — Reinitialize all defective/disabled subsystems.

2.3.8 Data Extraction and Safe Data. The DEP obtains mission data and equipment status and stores the

data on tracks 2, 4, and 6 of the TC within the DMTU. The information is later used to reconstruct the mission, train operators, and record aircraft maintenance data.

Note

END MISSION is required for proper data extraction/mission replay.

Three categories of data are extracted by DEP:

1. Prespecified events — Events, such as IFPM status reports, on-tops, FTPs (entry, capture, and removal), subsystem activation and deactivation, contacts (radar and FLIR), fixes, as well as sonobuoy, and weapon deployments are recorded along with their specific parameters.

2. Periodic events — Aircraft flightpath data and ESM data are extracted at regular intervals.

3. Operator requested events — The contents of a displayed tableau are extracted by pressing TABLE EXTRCT display control switch at the COTAC, TACCO, or SENSO station.

When an extractable event occurs, the data extraction subprogram is notified, notes the event parameters, and stores them in a 250-word data extraction buffer of the GPDC main memory. When the buffer is filled, these data are transferred onto a designated track of the TC. When a track is filled, the data extraction subprogram requests the DMTU to reposition the read/write heads on the next track.

The process repeats itself until both tracks devoted to data extraction are filled, at which time the following alert is displayed:

ZZZZ END DATA EXTR

In addition to the data extracted by DEP onto the TC, a component of the executive subprogram extracts safe data onto the GMA once every 2 minutes. These data are used to continue a mission following an OPERATIONAL CONT reload. Safe data include:

1. Navigation parameters

2. Communications configuration

3. Kill stores inventory

4. Track number block

5. Contact number block

6. Deployed sonobuoy positions

7. Contacts

8. Fixes

9. Tracks

10. Special points

11. On top

12. Special threats

13. Current ESM scan bands

14. Display status of all symbology.

Safe data are available during an operational continue reload, via the INSERT SAFE DATA cue, or can be loaded at any time by use of the INSERT DATA function (PROGRAM CONTROL matrix).

2.3.9 In-Flight Performance Monitoring. The IFPM subprogram monitors avionics equipment status and receives equipment malfunction reports from the individual subsystem subprograms such as FLIR and radar. Malfunctions also are detected from periodic test programs such as the GPDC self-test program.

The EAR generates the alerts and tableau modifications that correspond to the subsystem failure. The EAR processes three basic categories of subsystem failures.

1. Data transfer failures

2. Hardware failures

3. Hardware failures disappearing.

Data transfer failures include data transfer self-test errors, illegal responses, and power supply voltage tolerances. Transmissions are retried three times and, if the failure continues after three successive attempts, the failures are defined as hardware failures. All other failures are immediately defined as hardware failures. Hardware failures detected by IFPM cause the EAR to display the following alert:

ZZZZ XXXXXXXXX DEF

ZZZZ represents time, and the Xs represent the defective subsystem. Additionally, the appropriate subsystem defect and disable columns of the SYSTEM STATUS Tableau will be updated to reflect the status of the subsystem.

Hardware failures disappearing are failures that had previously been reported, but subsequently the failure has disappeared and the subsystem is operational again. The EAR then displays the alert:

RNZ XXXXXXXXX

where the Xs represent the subsystem listed in the SYSTEM STATUS Tableau.

The alert indicates a defect has disappeared in the equipment and may be reinitialized through the system status options of the PRGM CONT matrix.

2.3.10 Hook Table and Display Buffer. The MPDs and the pilot display may be overloaded if either the hook table or the display buffer for that specific display overflows. The hook table contains all TAC PLOT symbology in GPDC memory that might be displayed at any point on the surface of the Earth. Symbols are in the hook table, independent of range scale selected or display center point. Clearing a symbol using CLR PT data does not always remove it from the hook table. The display buffer contains all TAC PLOT symbology which is currently being displayed at a specific station. Symbols in the display buffer are dependent on display scale and display center coordinates. Items cleared from the display are also cleared from the display buffer.

One symbol in the hook table requires one word of memory space. However, the display buffer usually requires more than one word of memory for one symbol.

The sizes (number of words) of the hook table and display buffer memories for the pilot are 50 words for the hook table and 200 words for the display buffer. COTAC, TACCO, and SENSO each have 100 and 300 words, respectively.

Typical display buffer memory requirements for displayed items are shown in Figure 2-28, with the number of words required for each item.

Sonobouy	4
FTP (Undesignated)	4
FTP (Designated)	6
On Top	2
Basic Contact	4
Remote Contact (No Bearing)	4
Remote Contact (Bearing)	12
PU	10
Fix	9
Track	10
Lat/Long	7
Range Radius Circle	6

Figure 2-28. Typical Display Buffer Memory Requirements

An overflow of either the hook table or display buffer is indicated to the operator by one of the following alerts:

DSPL BUFFER EXCD

1. The operator display buffer has overflowed.

DSPL TABLE EXCD

2. The operator hook table has overflowed.

DSPL TABLE LIM

3. The operator hook table has been filled to the point where there is capacity for only two more items. At the pilot station, this capacity for two more items does not include the capacity reserved for the two highest priority FTPs. The alert is displayed when the 98th item is entered at the COTAC, TACCO, or SENSO station and when the 46th item is entered at the pilot station.

2.4 CUES

Cues are GPDC messages displayed on MPDs that give directions to the COTAC, TACCO, and SENSO operators when they are processing a function. Cues are not displayed at the pilot station. The type of cue determines whether the action directed is optional or mandatory.

There are four types of cues:

1. Data entry
2. Decision
3. Function activation
4. Loader.

Data entry and decision cues are classified as optional or mandatory. Function activation and loader cues are always mandatory.

Optional cues have OPTNL displayed in the lower right corner of the cue area, informing the operator that the cue may be disregarded. If the operator decides not to respond to an optional cue, the SKIP CUE switch is pressed, informing the GPDC to use preprogrammed data that allows function processing to continue. To terminate an optional cueing sequence of a function, the TERM CUE SEQ (terminate cue sequence) switch is pressed.

Mandatory cues request inputs that the GPDC requires to complete the function being processed. When a mandatory cue is ignored, function processing is terminated.

Some optional cues can be mandatory under certain circumstances. This is because some cues are activated by more than one portion of the operational program. While these cues are normally displayed as optional they become mandatory to certain users. In this case, the OPTNL is not displayed.

The correct method of responding to each type and classification of cue is detailed in the following paragraphs. Whenever practical in this manual, a cue is followed by the instruction: Respond to the cue and press ENTER (or HOOK VERIFY).

Each cue and the purpose of that cue, with applicable selection ranges, is described in Chapter 8.

2.4.1 Data Entry Cues. Data entry cues are displayed when a numeric input such as latitude, longitude, direction in degrees, speed, or distance is required.

For example, the program displays the mandatory cue:

```
ENT LATITUDE
N 34 12.320
```

This cue instructs the operator to type in the latitude for the navigation function being processed or to use the suggested entry displayed.

A suggested entry may be displayed on a mandatory data entry cue directly below the cue verification line. The suggested entry is existing data that are displayed in anticipation of the operator response to the cue. To accept the suggested entry, the operator presses the ENTER switch; these data are entered into the GPDC and the cue is removed from the cue display area. If the operator wishes to modify a part of the suggested entry and accept the remainder, REPEAT switch may be pressed for each acceptable character space and the appropriate keyset switch pressed for each character space to be modified. When the completed cue is in the cue verification area, the ENTER switch is pressed to enter the data into the GPDC.

When there is no suggested entry, the operator types in the appropriate entry which then appears on the cue verification line. The operator visually checks the entry, then presses the ENTER switch; these data are entered into the GPDC and the cue is removed from the cue display. Optional data entry cues have OPTNL displayed in the lower right corner of the cue area. For example, the program displays the optional cue:

```
ENT STA ELEV-FT
----
              OPTNL
```

The cue that appears during the TACAN GEO CORR function instructs the operator to enter the tacan station elevation in feet. The operator can type in appropriate numbers (0 to 9999) that appear from right to left replacing the blanks in the cue verification area. The operator visually checks the entry and presses the ENTER switch to enter the data into the GPDC and remove the cue from the display. If the operator chooses to skip the cue, the GPDC sets the tacan station elevation to 0 feet and allows processing to continue.

2.4.2 Decision Cues. Decision cues are displayed when the program requires the operator to select one of several specific responses.

For example, the following mandatory cue instructs the operator to select arming for both bombs and cluster bombs:

X SEL ARMING
1 NOSE
2 TAIL
3 BOTH

The operator types in the number representing the decision. The decision is checked by observing the entry in the cue verification area (X) located in the upper left-hand corner of the cue area. The ENTER switch is then pressed to enter the decision into the program and remove the cue from the display.

An optional decision cue has OPTNL displayed in the lower right corner of the cue area, informing the operator that the request can be bypassed by pressing the SKIP CUE switch. For example, the following optional cue allows the operator to select the country of origin for a contact:

SEL COUNTRY
1 GE 6 CN
2 RU 7 NE
3 US 8 IT
4 UK 9 JA
5 FR 0 SW
OPTNL

The operator types in the number representing the decision. The decision is checked by observing the entry in the cue verification area, located in the upper left corner of the cue area. The ENTER switch is then pressed to enter the decision into the program and remove the cue from the display.

When SKIP CUE is pressed, the program continues processing the function using preprogrammed data. In the preceding example, the country of origin is automatically designated as unknown.

2.4.3 Function Activation Cues. Function activation cues are displayed when an additional specific function is required to complete processing of an active function. All function activation cues are mandatory instructions.

Function activation cues instruct the operator to enter data into the program, or to activate, designate, or position symbology on the display. When data are entered into the program, the ENTER switch is pressed to complete the function and remove the cue from the display.

When function activation cues instruct the operator to hook symbology or points of interest on the display, the HOOK VERIFY and ENTER switches are pressed to complete the function and remove the cue from the display.

2.4.4 Loader Cues. Loader cues are displayed during program loading and initialization. Loader cues allow the operator to instruct the program to select a particular program and also to enter information unique to a given mission.

2.5 ALERTS

Alerts are one-line messages displayed by the program to inform the operator of specific conditions or malfunctions in the avionics system.

There are seven types of alerts:

1. System
2. Keyset
3. Function
4. Loader
5. Advisory
6. Recovery.

Alerts are displayed at all crew stations. The alert display area consists of three lines on the COTAC MPD. The pilot display and TACCO/ SENSO MPD alert display areas consist of six lines with alternate blank lines. The alert lines are 18 characters long and are always displayed in the same relationship to each other.

Alert descriptions with the meaning of the alert and impact on the operation or action, if any, to be taken by the operator is contained in Chapter 9.

2.5.1 System Alerts. System alerts inform the crew a system failure has occurred or a critical condition exists which may require degraded mode operation. System alerts also display a subsystem status that is pertinent to a related function. The program can store up to 10 system alerts in memory, including the one

displayed (the latest system alert). The first four characters of a system alert is the Zulu time that the alert was generated and is represented in this manual by ZZZZ preceding the alert. System alerts remain in view until cleared by pressing the CLEAR ALERT switch or until removed from the display by more recent alerts. A new alert in excess of the memory limit of 10 causes the oldest alert in memory to be aged out.

2.5.2 Keyset Alerts. Keyset alerts are not stored in memory. Keyset alerts inform the operator that a condition exists that prevents normal processing of a selected function. Keyset alerts indicate that a function prerequisite has not been completed, is incorrect, or that a particular limit has been reached or exceeded. Only the station requesting the function displays the associated keyset alert. Only one keyset alert appears at a station and is independent of keyset alerts at other stations. Each keyset alert is cleared by pressing any INCOS switch at that station.

In INCOS tray function processing, the following keyset alerts appear frequently:

1. INVALID ENTRY
2. NO HOOK VERIFY
3. REPOSITION HOOK
4. CAPACITY LIMIT
5. CAPACITY EXCD (capacity exceeded)
6. NOT AVAIL (not available).

2.5.2.1 INVALID ENTRY. Alerts the operator that an incorrect or incomplete data entry was made. The GPDC does not know if a data entry is correct. For example, the computer accepts a target bearing of less than 359° as valid data regardless of the actual bearing. If the operator enters a bearing greater than 359°, the computer determines that the entry is invalid. Other invalid entry examples are a latitude greater than 90°, or a longitude greater than 180°. When an invalid entry has been made, the program usually reverts to one step before the error was made. For example: if the operator is processing a contact designation and selects an incorrect designation, the program ignores the entry, displays the INVALID ENTRY alert and retains the contact designation cue for the operator to answer.

2.5.2.2 NO HOOK VERIFY. Alerts the operator that a position or symbol must be hooked to enable the processing of a task, and he has failed to do so. For example, the operator depresses CLEAR POINT DATA but has not hooked the point to be cleared. The program, not knowing what point to clear, alerts the operator with the NO HOOK VERIFY alert.

2.5.2.3 REPOSITION HOOK. Alerts the operator that an improper symbol or position was hooked to complete the processing of a task. The operator repositions the hook carefully, presses HOOK VERIFY, and proceeds with the function.

2.5.2.4 CAPACITY LIMIT. Alerts the operator that the system storage capacity is reached for a particular type symbol or function. As the operator attempts to enter additional data of the same type, the program exits the function and the operator must destroy some previously entered data of the same type and then reenter the desired data, or retain all the currently stored data and not enter the new data.

2.5.2.5 CAPACITY EXCD (Capacity Exceeded). Alerts the operator that the system storage capacity is filled and that no room is available for the entry just attempted. The program ignores the input and displays the alert until it is cleared by the operator.

2.5.2.6 NOT AVAIL (Not Available). Alerts the operator that he has attempted to activate a function for which the prerequisites have not been met. For example, the operator attempts to display a range circle while the display is in the FLIR mode. Range circles are not possible in this display configuration; therefore, the NOT AVAIL alert is displayed. The most common reason for the NOT AVAIL alert is that the operator display is not in a display mode compatible with the requested function.

2.5.3 Function Alerts. Function alerts inform the operator of a subsystem status, notify the operator of a condition that inhibits completion of a task, and direct the operator to activate a function that allows processing to continue at another station.

Function alerts appear at any station operating in the mode affected by the alert. One function alert can be displayed at each station. They are removed by any of the following:

1. By accomplishing the required function
2. Automatically by the subprogram
3. By aging out if more than six function alerts for that station are backlogged in memory.

Aging out is the automatic removal of the oldest alert to allow display of a new alert when the display capacity is exceeded. As new alerts are cleared from the display, the alerts held in memory move up into view.

In all weapon and search stores procedures, a functional alert directing a required action cannot be aged out of view and backlogged into memory by another alert in sequence within the function. For example, the alert TURN ON MSTR ARM remains on the display until the function is deactivated or the MSTR ARM switch, located on the pilot left console, is placed in the ON position.

2.5.4 Loader Alerts. Loader alerts are displayed during a GPDC loader routine. They appear in the lower left area of the MPD, informing the operator of key information concerning the status of equipment during the loader routines (INCOS, DMTU, GPDC).

2.5.5 Advisory Alerts. Advisory alerts are a series of advisories that appear in the left center area of the MPD when the loader routine is active. They inform the operator of the current loader routine status.

2.5.6 Recovery Alerts. When SEL/OP loader routine is executing a DMTU recovery procedure, the alert RECOVERY IN PROGRESS is displayed (flashing) in the lower left area of the MPD.

2.6 DISPLAY SYMBOLOGY

In conjunction with the TMP display generators, the DISPAC subprogram constructs symbols for display at each crew station. Many symbols are illustrated with letters such as XXX or CCC on the right side. The letters themselves are not actually displayed but represent positions where data (for example, time and track number) may be displayed. DISPAC symbology includes the following:

2.6.1 Hook. The hook symbol position is controlled by the operator through trackball movements. The operator uses the hook as a pointer for designating positions or symbols on the display.

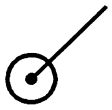

2.6.2 Aircraft. The aircraft symbol represents the aircraft current position and moves over the display area with direction and speed proportional to the aircraft ground track. A 1/2-inch vector extends from the symbol center and represents the current direction of the aircraft ground track.

2.6.3 Sonobuoy. The sonobuoy symbol marks a sonobuoy position on the tactical plot display. The sonobuoy symbol has several associated letters and numbers that describe:

1. Sonobuoy type (X) where X can be:

   D — DIFAR
   K — REMOTE
   L — LOFAR
   S — DICASS
   V — VLAD

2. RF channel (AA) where AA can be 01 through 99.

3. Processor tuning status (B) where B can be:

   K — Remote

4. If the TN AMPLIFY function is active, CCCC represents a four-digit (octal) data-link track number.

2.6.4 Smoke. The smoke symbol marks smoke positions on the tactical plot display.

2.6.5 Sound Underwater Signal. The SUS symbol marks the computed position when a SUS splash point occurs after the SUS is dropped from the aircraft.

2.6.6 Fly-To-Point. The FTP symbol is used to mark a geographic position toward which the operator wants the aircraft to proceed. A designated FTP has a 1/2-inch vector extending from the symbol center in the direction the operator wants the aircraft to overfly the FTP. The associated letters and numbers describe:

1. FTP type (X) where X can be:

   W — Weapon
   E — Expendable
   I — Intercept
   N — Normal
   M — Monitor

   Note

   Detailed information on FTPs, including ORBIT, is discussed in the steering subprogram description in Chapter 4.

2. FTP priority (YY) where YY is a one- or two-digit number representing the FTP priority. The pilot display is an exception to this rule. On the pilot display, the priority designation is absolute regardless of FTP type and sequence within the type.

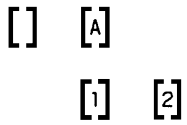

2.6.7 Reference Mark. The reference mark is used as a general purpose mark to flag points of interest on the tactical plot. If the mark is used to designate the position of the aircraft as it flies over a point, the letter "A" appears in the symbol center and it is called an "aircraft mark." The numbers 1 and 2 appear in reference marks during the CMPT INTSCT cueing sequence when an ambiguity exists.

2.6.8 Area Search Symbol. The area search symbol is used to show the location of radar returns on the TAC PLOT when utilizing the area search function.

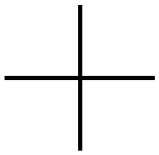

2.6.9 Classification Aids Cursor. The classification aids cursor is used under trackball control to aid in measurement of ISAR images.

2.6.10 Radar Detect Symbol. The radar detect symbol is used to show the locations of radar returns on the TAC PLOT when utilizing the target correlation function.

2.6.11 Weapon Splash Point. The weapon splash point symbol marks the calculated position where a weapon strikes the water.

1. Weapon type (X) where X can be:

   B — Bomb
   H — Harpoon
   M — Mine
   T — Torpedo

2. Estimated time of splash (CCCC) is only displayed when the INCOS AMPLFY function is active.

3. If the TN AMPLFY function is active, CCCC represents a four-digit (octal) data-link track number.

EX

2.6.12 Enable Point. The enable point symbol consists of the following:

1. The character E designating the position where the Harpoon missile seeker will initiate a search pattern (used in BOL mode).

2. The character X indicating the associated wing station, 5 or 6.

DX

2.6.13 Destruct Point. The destruct point symbol consists of the following:

1. The character D designating the position where the Harpoon missile seeker will terminate its search pattern and self-destruct, used in BOL mode.

2. The character X indicating the associated wing station, 5 or 6.

WX

2.6.14 Harpoon Waypoint. The Harpoon waypoint symbol consists of the following:

1. The character W designating the position where the missile will alter its direction toward the Harpoon aim point (RBL mode), or the enable point selected (BOL mode).

2. A one-character digit indicating the associated wing station, 5 or 6.

2.6.15 Harpoon Aim Point. The Harpoon aim point symbol consists of the following:

1. The character designating the Harpoon missile aim point in the range RBL mode.

2. A four-character octal link track number -XXXX.

3. A one-character digit indicating the associated wing station, 5 or 6.

4. When the Harpoon aim point is assigned to a system track, a 1/2-inch vector is drawn from the center of the aim point in the direction of the designated track.

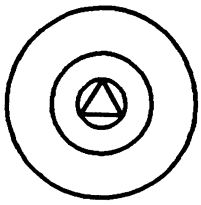

2.6.16 Harpoon Waypoint Envelope — RBL Mode. The Harpoon waypoint envelope symbol consists of two concentric circles centered about the Harpoon aim point. It is used to designate an area within which the operator may select a valid Harpoon waypoint.

2.6.17 Harpoon Waypoint Envelope — BOL Mode. The Harpoon waypoint envelope symbol consists of W located on each end of a bearing line. The Ws indicate the two points between which an operator may select a valid Harpoon waypoint.

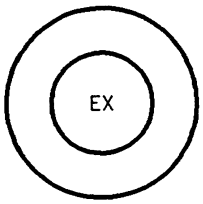

2.6.18 Harpoon Destruct Point Envelope. The Harpoon destruct point envelope consists of two concentric circles centered about the Harpoon enable point.

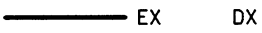

2.6.19 Harpoon Release Envelope — BOL Mode With No Waypoint Selected. The Harpoon release envelope for the BOL mode with no waypoint selected consists of one vector along the bearing line determined by the Harpoon enable and destruct points.

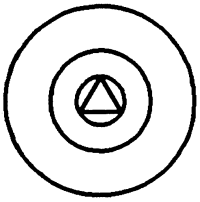

2.6.20 Harpoon Release Envelope — RBL Mode with No Waypoint Selected. The Harpoon release envelope for the RBL mode with no waypoint selected consists of two concentric circles centered about the Harpoon aim point.

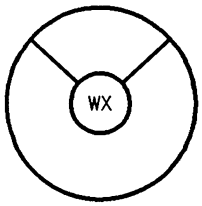

2.6.21 Harpoon Release Envelope — Waypoint Selected. The Harpoon release envelope for BOL or RBL with a waypoint selected consists of the following:

1. Two concentric circles centered about the Harpoon waypoint.
2. Two vectors that form a 90° angle such that their bisection intersects with the entered Harpoon aim point or Harpoon bearing line.
3. Waypoint envelope always points toward aim point or enable point (not displayed).

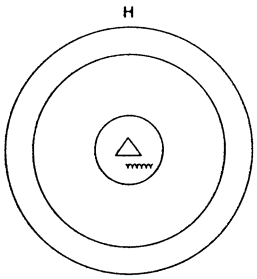

2.6.22 Harpoon DTOT Display Symbology. This consists of a circle centered on either a waypoint, aim-point release envelope, or enable point with a radius decreasing at:

1. The rate of current aircraft groundspeed when the circle is outside the maximum release range.
2. The rate of the missile airspeed when the circle is at or inside the maximum release range. A six-digit DTOT time is display adjacent to the designated aim point or enable point.

Note

DTOT circle is an approximation of accurate timing calculations displayed in the Harpoon Missile Tableau.

2.6.23 On Top. The on-top position symbol is used to mark the position directly below the aircraft when the ON TOP switch is pressed. The O represents the precise position location. Only one on-top position symbol can be displayed at a time.

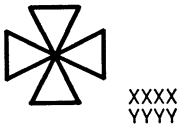

2.6.24 Datum (Local or Remote). The datum symbol marks a locally entered or a data-link received contact position on the tactical plot. The associated numbers describe:

1. Track number (XXXX) where XXXX ranges from 0200 through 7776 (octal).

2. Designation time (YYYY) where YYYY ranges from 0000 through 2359 (visible in amplify).

3. If TN AMPLFY function is active, YYYY represents a four-digit (octal) data-link track number.

4. If the datum symbol has a superimposed K, the contact is data-link received.

Note

Track numbers and contact numbers are designated in the octal number system.

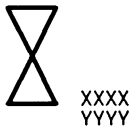

2.6.25 Lost Contact. The lost contact symbol is used to mark the last known position of the lost contact. The associated numbers describe:

1. Track number (XXXX) where XXXX ranges from 0200 through 7776 (octal), is displayed if lost contact is locally entered. Track number is blank if the symbol is remote.

2. If TN AMPLFY function is active, YYYY represents a four-digit (octal) data-link track number.

3. If INCOS AMPLFY function is active, YYYY represents a three-digit (YYY) speed of track.

4. A superimposed letter on the symbol indicates the source designator, where:

BLANK — Dissimilar Sources
E — ESM
F — FLIR
K — Remote
R — Radar
T — TACCO Designate
V — Visual

2.6.26 Downed Aircraft (Local or Remote). The downed aircraft symbol is used to mark the position of an aircraft crash. It flashes continuously. The associated numbers describe:

1. Designation time (YYYY) where YYYY ranges from 0000 through 2359 (visible in amplify).

2. If TN AMPLFY function is active, YYYY represents a four-digit (octal) data-link track number.

2.6.27 Distressed Vessel (Local or Remote). The distressed vessel symbol marks the position of a vessel with an emergency. It flashes continuously. The associated numbers describe:

1. Designation time (YYYY) where YYYY ranges from 0000 through 2359 (visible in amplify).

2. If TN AMPLFY function is active, YYYY represents a four-digit (octal) data-link track number.

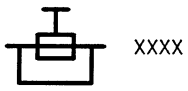

2.6.28 CV. The CV symbol is an operator-selected symbol that designates the position of the carrier. The numbers (XXXX) indicate the time of the symbol's last computed update.

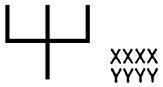

2.6.29 Nonsub (Local or Remote). The nonsub symbol marks the position of a contact which has been evaluated as nonsubmarine. The associated numbers indicate:

1. Track number (XXXX) where XXXX ranges from 0200 through 7776 (octal).

2. Determination time (YYYY) where YYYY ranges from 0000 through 2359 (visible in amplify).

3. If TN AMPLFY function is active, YYYY represents a four-digit (octal) data-link track number.

4. If the nonsub symbol has a superimposed K, the contact is data-link received.

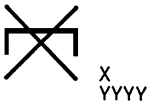

2.6.30 Remote Weapon Splash Point. Remote weapon splash point marks the calculated position of a data-link received weapon splash point.

1. Splash point type (X) where X equals:

   B - Bomb or Torpedo

2. If TN AMPLFY function is active, YYYY represents a four-digit (octal) data-link track number.

2.6.31 Man-In-Water (Local or Remote) or PU Emergency Bailout. Man-in-water symbol marks the position of a man in the water or the position at which an emergency bailout from a PU occurred.

1. PU number (XXXX) is displayed when the symbol is designated as an emergency bailout.

2. Time of entry (YYYY) where YYYY ranges from 0000 through 2359 (visible in amplify).

3. If TN AMPLFY function is active, YYYY represents a four-digit (octal) data-link track number.

2.6.32 Return to Base (PU Emergency). The return to base symbol marks the position where a local or remote PU made the determination to make an emergency return to base.

1. XXXX represents PU number.

2. Time of entry (YYYY) where YYYY ranges from 0000 through 2359 (visible in amplify).

3. If TN AMPLFY is active, YYYY represents a four-digit (octal) data-link track number.

2.6.33 Basic Contact. The basic contact symbol is used to mark a contact gained by a sensor on the aircraft or transmitted to the aircraft over data-link. The symbol consists of a letter representing the sensor that gained contact or the source of the contact. The letter E can be:

R — Radar
E — ESM
K — Remote (data-link)
T — TACCO Designate

The associated numbers indicate:

1. Contact number (XXX) where XXX ranges from 001 through 377 (octal).

2. Entry time (YYYY) where YYYY ranges from 0000 through 2359 (visible in amplify).

3. If TN AMPLFY is active, YYYY represents a four-digit (octal) data-link track number.

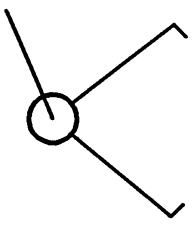

2.6.34 ESM Bearing Sector Inhibit. The ESM bearing sector inhibit symbol is used to indicate a sector

relative to true north that has been inhibited from displaying detected emitters.

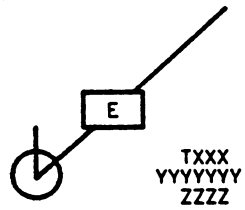

2.6.35 ESM Contact. The ESM contact symbol indicates an ESM bearing on the TAC PLOT. The symbol consists of a bearing line from the aircraft position at the time of contact to the plot edge in the direction of the contact. A basic contact symbol is displayed 1 inch from the bearing origin. See NAVAIR 01-S3AAB-1A for explanation of characters X, Y, and Z.

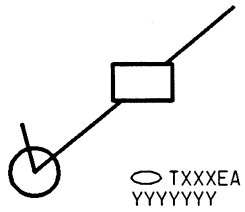

2.6.36 ESM Emitter. Displays an ESM Emitter on ESM plot. See NAVAIR 01-S3AAB-1A for explanation of characters X and Y.

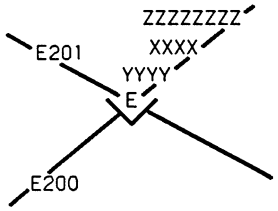

2.6.37 ESM/ESM Computed Intersection Fix. The ESM fix is generated through the use of the compute intersect function on two ESM bearing lines and consists of the following:

1. The hookable character E at the fix position surrounded by the appropriate fix symbol.

2. A four-character octal track number — XXXX.

3. (Amplify) A four-digit Zulu time of entry — YYYY, and a seven-character alphanumeric PDIP IV library name — ZZZZZZZ.

4. (Link Amplify) A four-character octal data-link track number — YYYY.

2.6.38 ESM Threat Contact. The ESM threat symbology on the pilot display indicates that an emitter has been received that may present a lethal threat to the aircraft. The ESM threat contact symbology consists of the following:

1. The character E within the hostile fix symbol.

2. A three-digit octal contact number — XXX.

3. A six-character weapon name from the ID library — YYYYYY.

4. A range circle centered around the aircraft symbol at 1.5 times the range of the most lethal emitter detected.

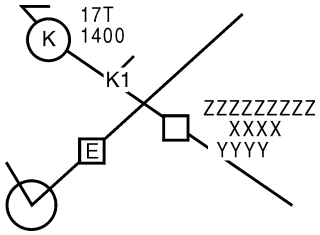

2.6.39 Computer Intersection — Fix Dissimilar Sources. A fix generated through the use of the compute intersection function on dissimilar sources consists of the following:

1. A hookable fix symbol located at the calculated intersection. There is no character inside the fix symbol.

2. A four-character octal track number — XXXX.

3. (Amplify) A four-digit Zulu time of entry — YYYY, and a 10-character alphanumeric rigging capability — ZZZZZZZZZZ.

4. (Link Amplify) A four-character octal data-link track number — YYYY.

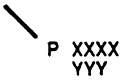

2.6.40 Continuous Predict. The continuous predict position symbol is used to mark the predicted contact

position on the TAC PLOT. The symbol position moves to coincide with the computer estimated contact position. It consists of the letter P with a 1/4-inch vector extending in the direction of the predicted contact course. The associated numbers indicate:

1. Track number (XXXX) where XXXX ranges from 0200 through 7776 (octal).
2. Contact speed (YYY) where YYY ranges from 000 through 999 (visible in amplify).
3. A remote continuous predicted position symbol is identified with the letters P_k.

S XXXX
YYY

2.6.41 Single Predict. The single predict symbol is used to mark a computed contact position for a time designated by the operator. The symbol does not move after it is displayed. The designated time can be in the future or in the past. The symbol consists of the letter S. The associated numbers indicate:

1. Track number (XXXX) where XXXX ranges from 0200 through 7776 (octal).
2. Designated contact position time (YYYY) where YYYY ranges from 0000 through 2359 when amplified.

N ZZZZZZZZZZ
VVVV
YYYY

2.6.42 Basic Fix. The basic fix symbol is used to mark contact fixes and tracks on the TAC PLOT. The symbol consists of a classification identification symbol (see Figure 2-29) and a 1/4-inch vector indicating the fix movement direction. The associated letter and numbers indicate:

1. Sensor source designator (N) where N can be:

   E — ESM computed intersection
   F — FLIR
   K — Remote (data-link input)
   R — Radar
   T — TACCO fix designate
   V — Visual
   X — Preflight inserted data
   Blank — Computed intersection with dissimilar sources.

2. Track number (VVVV) where VVVV ranges from 0200 through 7776 (octal).
3. Fix time (YYYY) where YYYY ranges from 0000 through 2359 (visible in amplify).
4. If TN AMPLFY is active, YYYY represents a four-digit (octal) data-link track number.
5. Rigging (Zs) where up to 10 alphanumeric characters represent name, number, or type that has been entered in the RIG Tableau. Also used for name of PDIP fix items.

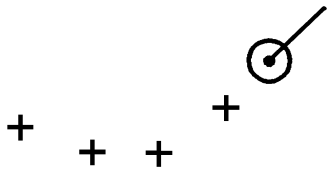

2.6.43 Aircraft Own Track History. The aircraft own track history symbol marks the aircraft path history on the TAC PLOT. It consists of up to 15 plus signs that appear at operator-selected time intervals. When 15 signs are displayed, appearance of the next sign ages out the oldest sign in the track.

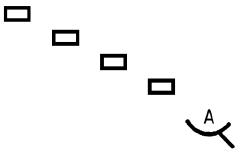

2.6.44 Fix History. The fix history symbol marks the track history of a subsurface, surface, or airborne track and all fixes associated with a track that has been removed from the display by the GEN TRK function. A maximum of 10 fix history symbols are displayed.

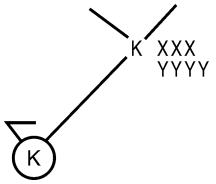

2.6.45 Sonobuoy Contact Bearing. The sonobuoy contact bearing symbol group consists of the basic sonobuoy symbol K enclosed. A bearing vector extends from the buoy symbol in the direction of the contact out to the display area edge. A 1/4-inch vector denotes the bearing change direction. The basic symbology, including

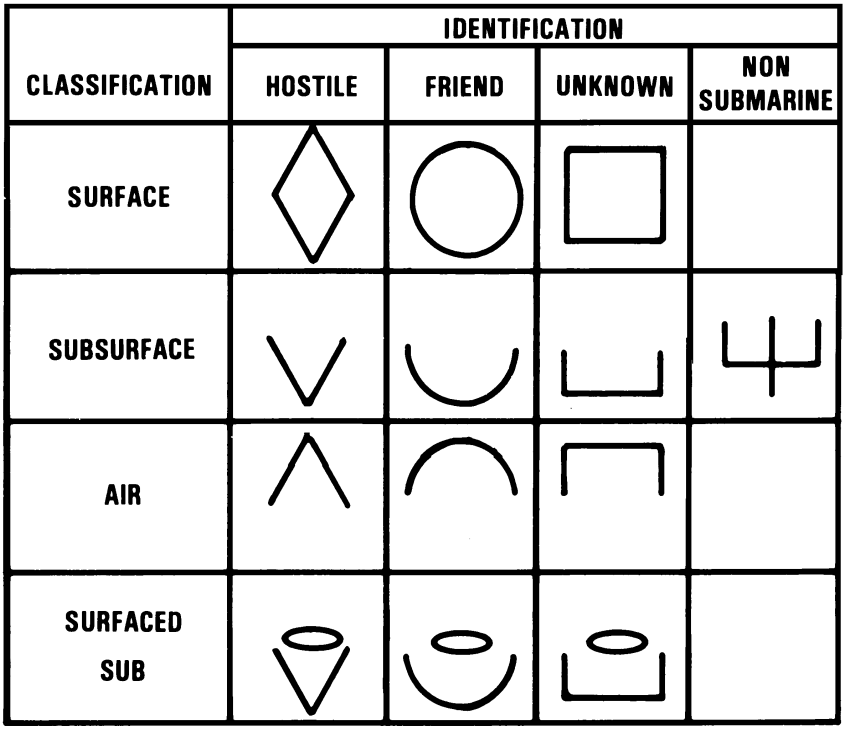

Figure 2-29. Basic Fix Symbology

contact number (XXX) and contact time (YYYY), is displayed 1 inch from the buoy symbol when amplified. If TN AMPLFY is active, YYYY represents a four digit (octal) data-link track number.

K — Remote DIFAR contact

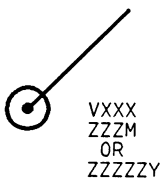

2.6.46 Vector. The vector symbol is controlled by the trackball and is used to measure a true bearing and distance on the MPD. The operator can originate the vector at the aircraft position symbol or from a hooked point. The symbol consists of a variable length vector extending from the aircraft symbol or a geographic position to the hook symbol. The letter V is displayed outside the hook symbol. The associated letters and numbers indicate:

1. Vector direction relative to true North (XXX) where XXX ranges from 000 through 359.

2. Vector length (ZZZM) if the plot scale is 32 nm or greater where ZZZ ranges from 000 through 999 (M indicates miles).

3. Vector length (ZZZZZY) if the plot scale is 16 nm or less where ZZZZZ is indicated in yards (Y indicates yards).

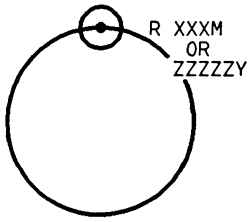

2.6.47 Range Radius Circle. The range radius circle symbol is used to construct patterns on the TAC PLOT. It consists of a circle centered on an operator-designated geographic position with the circle radius controlled by moving the hook symbol. The range readout (XXXM or ZZZZZY) is preceded by the letter R. The range readout limits are the same as the vector symbol.

1. Range readout (XXXM) is miles when plot scale is 32 nm or greater.

2. Range readout (ZZZZZY) is in yards when plot scale is 16 nm or less.

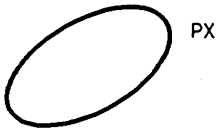

2.6.48 Probability Contour. The probability contour symbol is used to designate a geographic area within which the target will be found with an operator selected probability. The symbol consists of an ellipse representing the boundary of the probability area. The area size and shape depend on many conditions including the operator selected (desired) probability. The letter P followed by the selected probability X is presented at the northernmost point on the ellipse major (longest) axis. X ranges from 0.1 through 0.9.

LL N XX XX. XXX
E XXX XX.XXX

2.6.49 Latitude/Longitude. The latitude/longitude symbol displays the latitude and longitude of a point.

1. The first line contains the designator LL, a latitude readout in degrees, minutes, decimal minutes, and a leading north/south direction indicator. The first character is hookable.

2. The second line contains a longitude in degrees, minutes, decimal minutes, and a leading East/West direction indicator.

3. The third line contains a small circle that specifies the position for which the LL readout applies.

LL YYY N NM
XXX E NM

2.6.50 Latitude/Longitude (Grid Coordinate Reference). The latitude/longitude symbol displays the X and Y coordinates of a point with respect to the grid coordinate reference point.

1. The first line contains the designator LL, and a Y-grid coordinate readout in nautical miles and a north/south direction indicator. The first character is hookable.

2. The second line contains an X-grid coordinate readout in nautical miles and an east/west direction indicator.

3. The third line contains a small circle that specifies the position for which the X- and Y-grid coordinates readout applies.

2.6.51 ASW Search Center. A vector extending in the direction of ASW search center movement.

1. YYYY — A four-digit octal link track number (TN AMPLIFY).

2. YYYY — A four-digit time of entry (AMPLIFY).

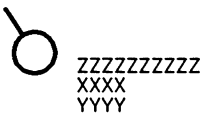

2.6.52 Participating Unit. A PU is a remote symbol at the reported coordinates indicating the appropriate category symbology: subsurface, surface, or air.

1. ZZZZZZZZZZ — A 10-character alphanumeric rigging capability (visible in amplify)

2. XXXX — A four-character octal PU address

3. YYYY DTCH = Ditching

   RTB = Return to base
   BAIL = Bailout

2.7 TACTICAL PLOT DISPLAY

Typical tactical plot display formats are shown in Figures 2-30, 2-31, and 2-32. These figures represent the same tactical situation as viewed at each station (pilot, COTAC, and TACCO/SENSO). Each display illustrates a sample of display symbology previously discussed, including cues, alerts, and the INDEX Tableau.

2.7.1 Pilot Display. The pilot display (see Figure 2-30) presents only a limited view of the tactical plot. To minimize display clutter, only those items of interest to the pilot are shown. The following are not displayed to the pilot:

1. Tableaus

2. Cues.

In addition, a maximum of two FTPs can normally be displayed at any one time. These two FTPs have sequential priority numbers, regardless of type. Harpoon targeting information including waypoints, destruct and enable points, and envelopes can be displayed. ESM emitters that may present a lethal threat to the aircraft are displayed.

Note

Displaying ESM threat emitters reconfigures the pilot display to the ESM plot and deletes all symbology, including Harpoon targeting data, that is not associated with the ESM plot.

2.7.2 COTAC MPD. The COTAC tactical plot (see Figure 2-31) presents a complete view of the tactical situation and is similar to the TACCO/SENSO tactical display. Physical location of the cue, alert, tableau, and peripheral readout areas differ from the TACCO/SENSO MPDs. The tableau display area is limited to a maximum of 14 lines for the first half of a tableau page and 16 lines for the second half. Pressing ADV displays the next 16 lines of a tableau.

In addition to the tactical plot display, the copilot/COTAC may select for display scan-converted PPI or B-Scan radar, FLIR, or ESM plot displays. Typical examples of these display formats are shown in the corresponding systems description in Chapter 6.

2.7.3 TACCO/SENSO MPD. The TACCO/SENSO tactical plot display (see Figure 2-32), like the COTAC tactical plot display, presents a complete real time view of the tactical situation. The physical arrangement of the TACCO/SENSO display allows a complete tableau page (30 lines) to be displayed. Also, all sensor data may be displayed. Refer to Chapter 6 for examples of the various nonacoustic sensor display formats.

2.8 INTEGRATED CONTROL SYSTEM

2.8.1 Introduction. The INCOS allows the operator to command the GPDC to perform a variety of calculations, control peripheral subsystems, store selected data, and display specific information. The GPDC communicates with the operator in several ways:

1. Lighting a portion of the selected switch amber, notifying the operator that his command is being acted upon.

2. Displaying requested information and/or making INCOS switches available by lighting their legend or status indicators.

3. Displaying alerts and cues on the displays.

The INCOS components are listed in Figure 2-33.

FO-1 through FO-4 show the INCOS component locations at each crew station.

2.8.2 Built-In Test Equipment. BITE indicator provides visual indication of an INCOS panel failure. The indicator appears black during normal operation and displays a white dot when a fault is set. The BITE indicator may be set automatically when the GPDC detects an INCOS panel fault or manually by pressing the BITE SET button. Pressing the BITE SET button reports a failure to the GPDC and displays an identifier indicator of the last switch pressed for a 10-second period. It may be possible to restore a disabled INCOS by manipulating the last switch depressed and reinitializing the appropriate DISCOS in the SYSTEM STATUS Tableau. See FO-16 for the identifier number of each INCOS switch.

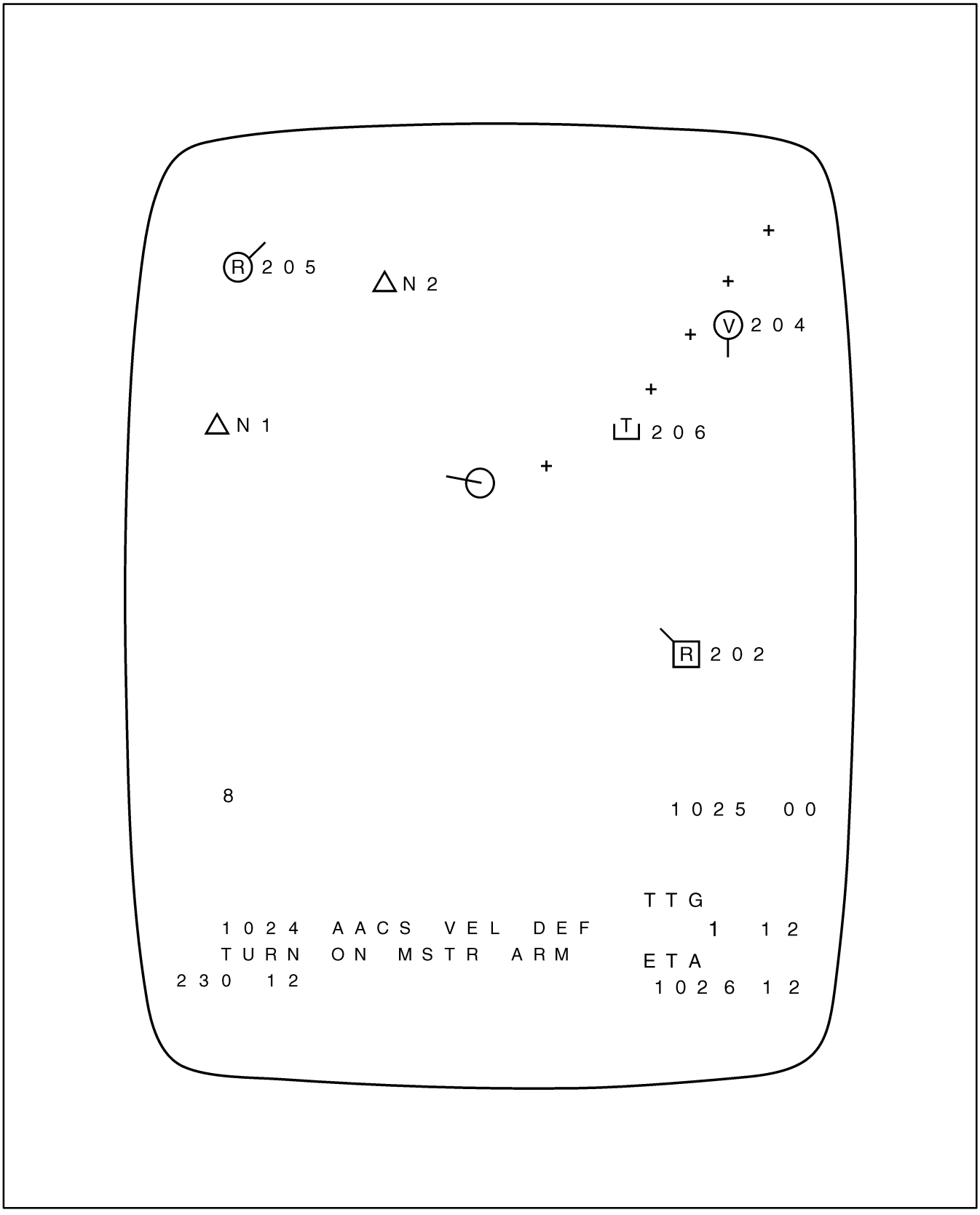

Figure 2-30. Pilot Tactical Display (Sheet 1 of 2)

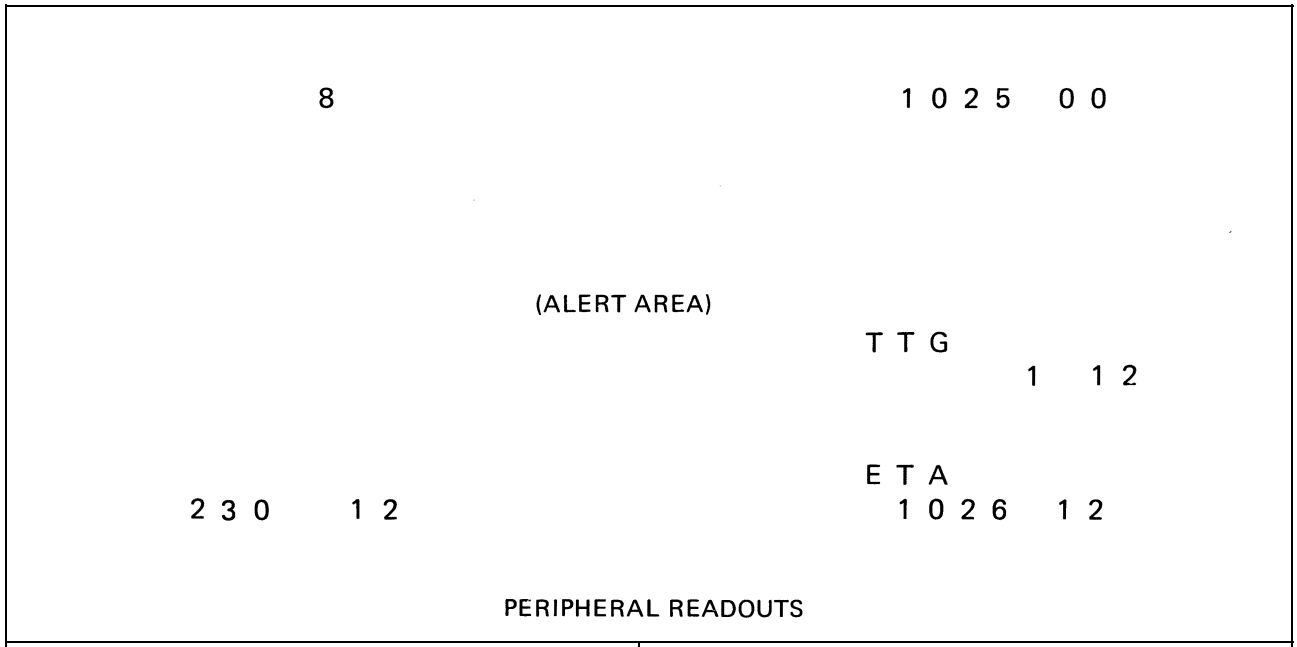

PERIPHERAL READOUTS

LEFT SIDE			RIGHT SIDE		
8	=	DISPLAY SCALE IN NAUTICAL MILES. MEASURED FROM CENTER OF TAC PLOT TO NEAREST EDGE (RANGE IS 2, 4, 8, 16, 32, 64, 128, 256, 512, OR 1024).	1025 00	=	ZULU TIME (RANGE IS 0000 00 THRU 2359 59).
			TTG	=	TIME TO GO TO FTP (APPEARS ONLY WHEN FTP IS ENTERED).
230 12	=	WIND DIRECTION IN DEGREES (RANGE IS 000 THRU 359) AND WIND SPEED IN KNOTS (RANGE IS 0 THRU 999).	1 12	=	MINUTES AND SECONDS FOR TTG (RANGE IS 00 00 THRU 59 59).
			ETA	=	ESTIMATED TIME OF ARRIVAL TO FTP.
			1026 12	=	ZULU TIME FOR ETA (RANGE IS 0000 00 THRU 2359 59).

Figure 2-30. Pilot Tactical Display (Sheet 2)

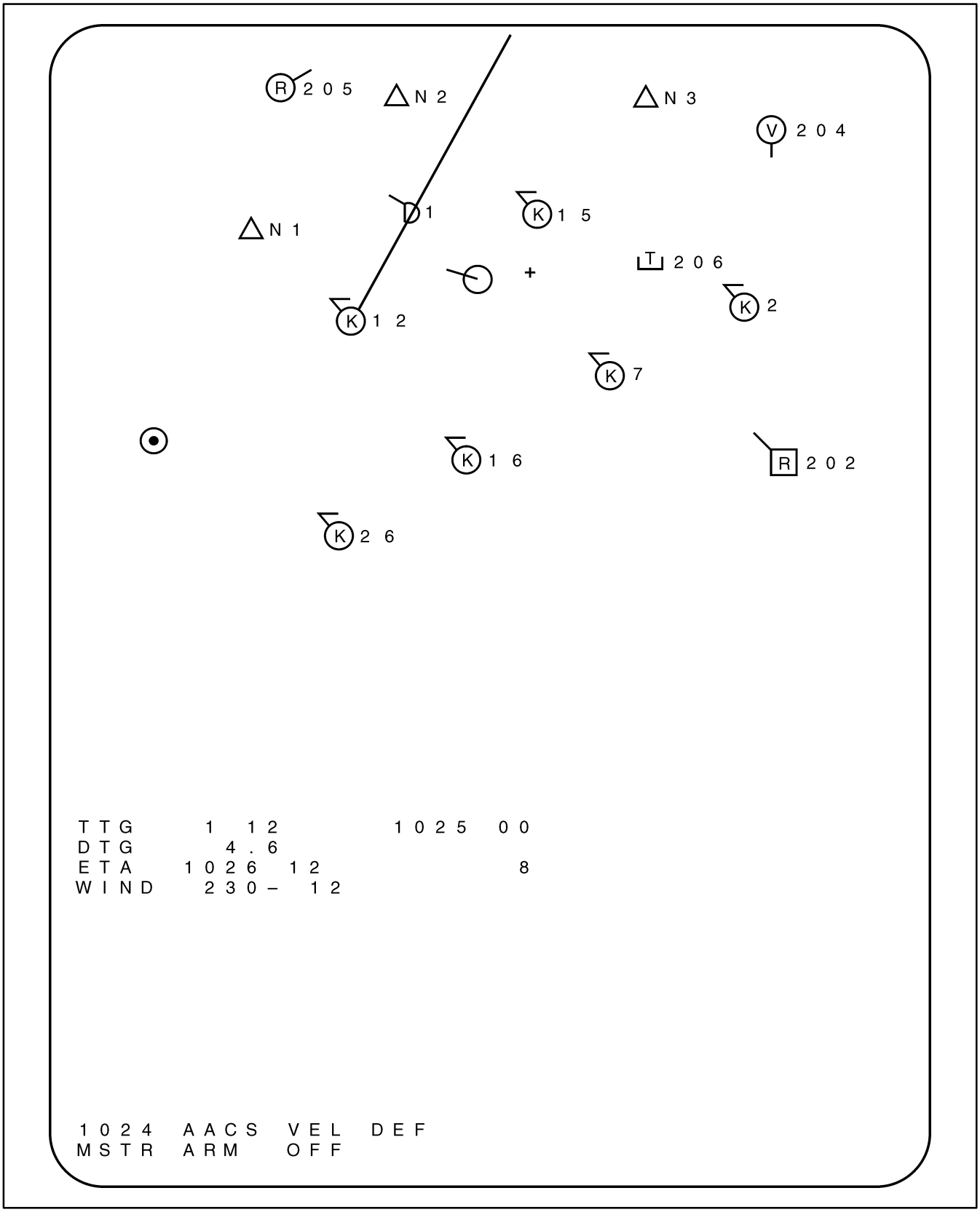

Figure 2-31. COTAC Tactical Display (Sheet 1 of 2)

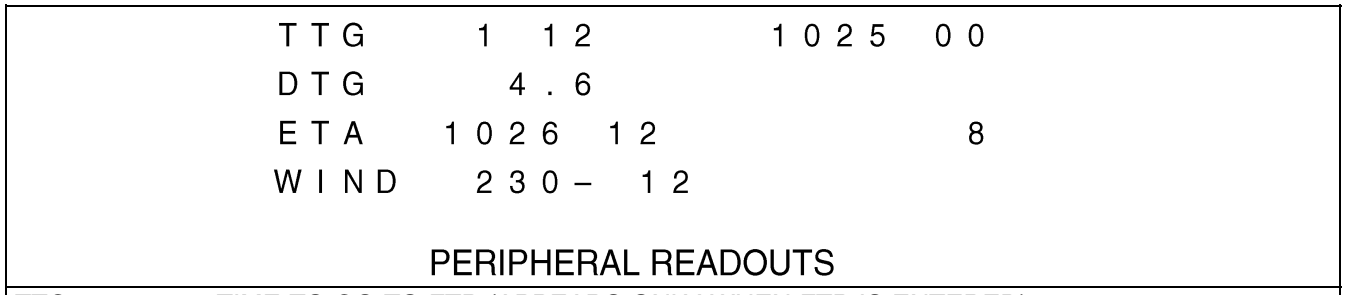

PERIPHERAL READOUTS

TTG	=	TIME TO GO TO FTP (APPEARS ONLY WHEN FTP IS ENTERED).
1 12	=	MINUTES AND SECONDS FOR TTG (RANGE IS 00 00 THRU 59 59).
1025 00	=	ZULU TIME (RANGE IS 0000 00 THRU 2359 59).
DTG	=	DISTANCE TO GO TO FTP (APPEARS ONLY WHEN FTP IS ENTERED).
4.6	=	NAUTICAL MILES FOR DTG (RANGE IS .0 THRU 999.9).
ETA	=	ESTIMATED TIME OF ARRIVAL TO FTP.
1026 12	=	ZULU TIME FOR ETA (RANGE IS 0000 00 THRU 2359 59).
8	=	DISPLAY SCALE IN NAUTICAL MILES. MEASURED FROM CENTER OF TAC PLOT TO NEAREST EDGE (RANGE IS 2, 4, 8, 16, 32, 64, 128, 256, 512, OR 1024).
WIND	=	WIND DIRECTION AND SPEED.
230 12	=	WIND DIRECTION IN DEGREES (RANGE IS 000 THRU 359), AND WIND SPEED IN KNOTS (RANGE IS 0 THRU 999).

Figure 2-31. COTAC Tactical Display (Sheet 2)

WARNING

The TACCO or SENSO tray shall never be raised and dropped in an attempt to regain its function. It could fall past the stop and become jammed below the full down position, making safe ejection unlikely.

2.8.3 Trackball, Hook Verify, and Enter

2.8.3.1 Trackball. The trackball controls the movement of the hook on the MPDs.

2.8.3.2 Hook Verify. The HOOK VERIFY switches cause the current hook position to be recorded in the GPDC memory. Placing the hook over a particular point of interest (a symbol, contact, or geographic position) and pressing either HOOK VERIFY informs the GPDC that this point on the display is the point upon which the next function will take action. Positioning the hook symbol and pressing either HOOK VERIFY is called hooking. If a symbol is hooked within 3/16-inch of a symbol position, the symbol flashes at 1-second intervals. The symbol flashes until acted upon by another function or until HOOK VERIFY is pressed again. If more than one symbol is within the 3/16-inch radius circle, only one symbol flashes. If the wrong symbol flashes, pressing HOOK VERIFY causes successive symbols to flash until the desired symbol flashes. When no symbol in the 3/16-inch radius circle is flashing, hooking acts on the geographic position rather than a symbol.

2.8.3.3 Enter. The ENTER switch is pressed when data are to be transferred from the cue verification area into the GPDC program memory. The current cue is then erased and the next step in a processing sequence is begun. If the data entry is the last step of a function, the function is completed.

2.8.4 Switch Lighting Conventions. INCOS switches have three lighting conditions to indicate the status of the system or function they control:

1. Unlighted (black) — not available
2. Green — available
3. Amber — active.

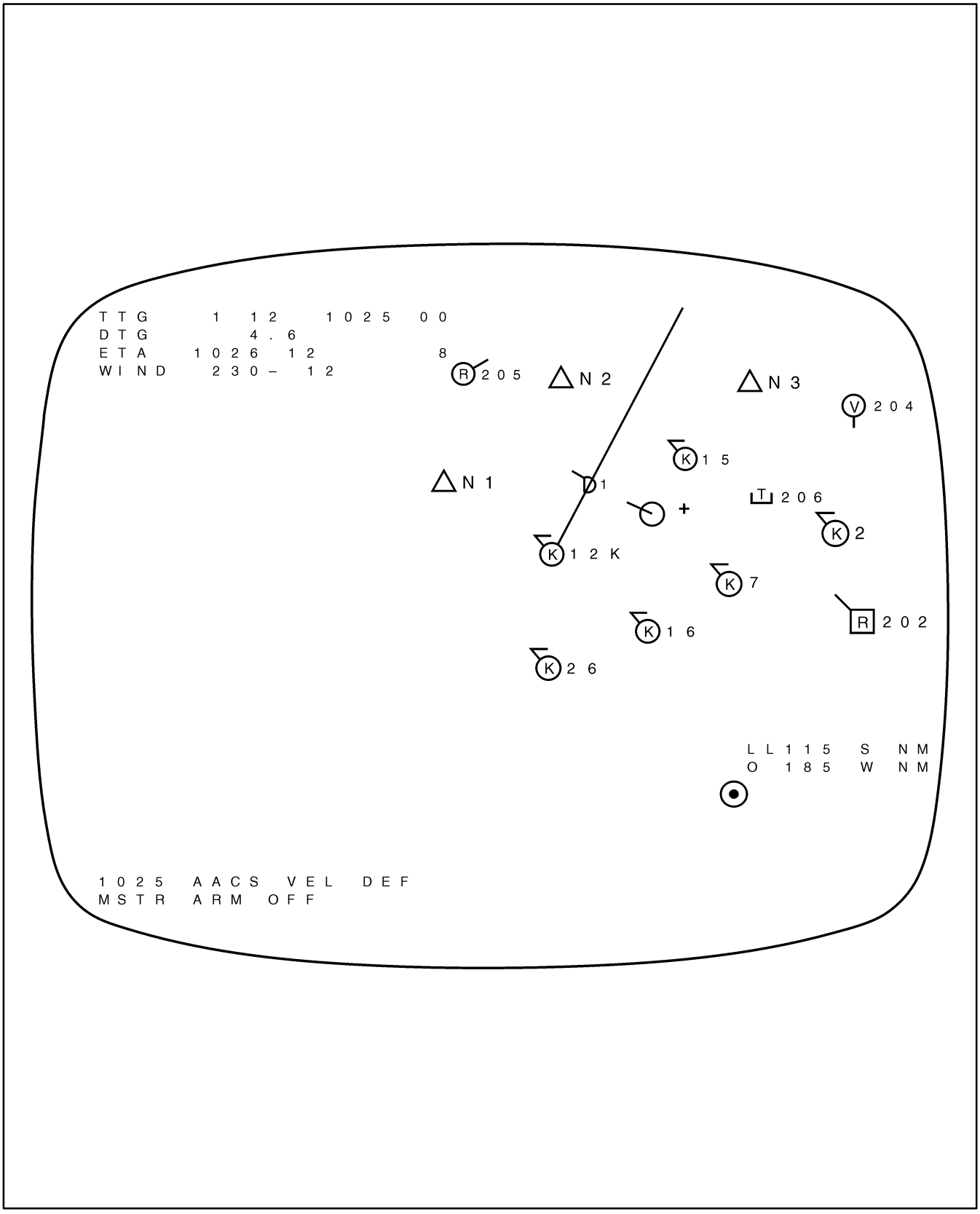

Figure 2-32. TACCO/SENSO Tactical Plot

TYPE DESIGNATOR	NOMENCLATURE	COMMON TERMINOLOGY	LOCATION
C-8862/ASQ-147	Tactical Indicator Control	Pilot Display Control	Pilot station
C-8859/ASQ-147	Computer Indicator Control	Copilot/COTAC INCOS Panel	Copilot/COTAC station
C-8860/ASQ-147	Computer Indicator Control	TACCO INCOS Tray	TACCO station
C-8861/ASQ-147	Computer Indicator Control	SENSO INCOS Tray	SENSO station

Figure 2-33. INCOS Components

INCOS lamp life can be prolonged significantly by turning the respective station lamp dimmers down during periods of inactivity.

2.8.5 INCOS Switch Actions. INCOS switches fall into three categories defined according to the system reaction that results from a switch depression:

1. Momentary action (M/A)
2. Alternate action (A/A)
3. Single action (S/A).

2.8.5.1 Momentary Action. Momentary action switches perform a single discrete action or series of actions that take such a short time to complete (within 1/2 second) that a change in switch lighting may not occur.

2.8.5.2 Alternate Action. A/A switches perform a continuous series of actions as long as the switch is active (amber). Pressing the switch changes the lighting from green to amber. Some A/A switches must be pressed when active (amber) to terminate the function and some A/A switches require the activation of another function for termination.

2.8.5.3 Single Action. S/A switches perform a single discrete action or a series of discrete actions that occur over a time period greater than 1/2 second. Pressing the switch changes the switch lighting from green to amber. The GPDC terminates the single action function when processing is completed. Pressing an active (amber) S/A switch a second time has no effect. Single action switch functions can be terminated before processing is completed if a cueing sequence is interrupted by selecting another function requiring the cueing area. There are, however, switches (S/A, A/A) that normally act like S/A switches except that the function they control can be aborted in the middle of a processing sequence the same as an A/A type switch.

2.8.6 INCOS Switch Types. INCOS switches are divided into four general types:

1. Matrix select
2. Option select
3. Display control
4. Keyset.

Note

- Exceptions to the following general rules are explained in the individual control descriptions.
- For each INCOS switch described in this manual, the following format is used.
- Additional COTAC INCOS switches are displayed as broken lines.

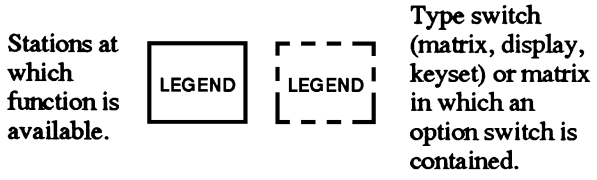

2.8.6.1 Matrix Select Switches (See FO-5 through FO-10). Matrix select switches, when pressed, call up and display legends on up to 12 other switches called option select switches. There are no pilot matrix select switches.

Matrix select switch legends automatically light green when the associated functions are available for use. The legends light amber when the functions are active (in use). Usually a matrix select switch becomes active only after switch depression. Matrix select switch legends go out when the associated function becomes unavailable. Matrix select switches are single action switches.

A dot (●) appearing as a switch legend indicates that the switch is a spare and has no present functions.

2.8.6.2 TACCO/SENSO Matrix Select Switches. TACCO/SENSO switch in the lower right corner of the display control group controls the mode of the matrix A and matrix B select switches. When TACCO is active (amber), upper matrix select switch legends are lighted. The SENSO mode/lower matrix select switches are no longer available or assigned. FO-8 and FO-9 show the TACCO and SENSO matrix A and B select switches and their corresponding option select function legends.

2.8.6.3 COTAC Matrix Select Switches. The A and B segments are matrix select switches with legends corresponding to the TACCO matrix select group. There are no amber light bulbs in the A and B segments; they only light green. FO-5 and FO-6 show the COTAC A and B matrix select switches and their corresponding option select function legends.

Pressing a matrix A or matrix B select switch brings up the associated option select function legends and returns the matrix select switch legends to the C (display control) mode. Thus, the COTAC can display data from any system and return to the use of display control functions while viewing the data.

2.8.6.4 Option Select Switches (See FO-5 through FO-10). Option select switches are used by the operator to exercise control over most S-3 systems. Each option select switch displays legends depending on the matrix select switch which is currently active.

Option select switches, like matrix select switches are divided into two halves. The upper and lower halves are associated with TACCO and SENSO functions, respectively. The SENSO mode/lower matrix select switches are no longer available or assigned. At the COTAC station, the upper and lower halves are associated with matrix A and matrix B, respectively. Unlike matrix select switches, option select function legends are always lighted amber. The half of the switch without the legend lights and displays the status of the switch. The colors signify the same operational status as in the matrix select switches; active (amber), available (green), and not available (black).

2.8.6.5 Display Control Switches. Display control switches are used in a manner similar to option select switches, for exercising control of various display functions. TACCO/SENSO display control switches are constructed similar to matrix select switches with upper (TACCO) and lower (SENSO) halves. The SENSO mode/lower matrix select switches are no longer available or assigned. The switch legends illuminate to indicate function status, in a manner similar to matrix select switches.

2.8.6.6 Keyset Switches. Keyset switches are used to enter numbers or letters (only numbers at COTAC station) into the GPDC. They are also used to change display scales, enter data into tableaus, and perform various functions relative to operator/GPDC communications. Keyset switches are either not available (black) or available (green). There are no amber lights in the keyset.

2.8.7 Keyset Functions. The keyset has two modes of operation:

1. Normal mode
2. Alphanumeric mode (TACCO/SENSO stations).

2.8.7.1 Normal Mode. Program initialization activates the normal mode of operation and the following functions are available:

1. INDEX
2. CLR ALERT (clear alert)
3. CLR PT DATA (clear point data)
4. ADV (advance)
5. SKIP CUE (skip cue)
6. RCNTR (recenter)
7. REPEAT

8. BACK SPACE
9. INCR SCALE (increase scale)
10. SELECT LINE
11. TERM CUE SEQ (terminate cue sequence)
12. DECR SCALE (decrease scale).

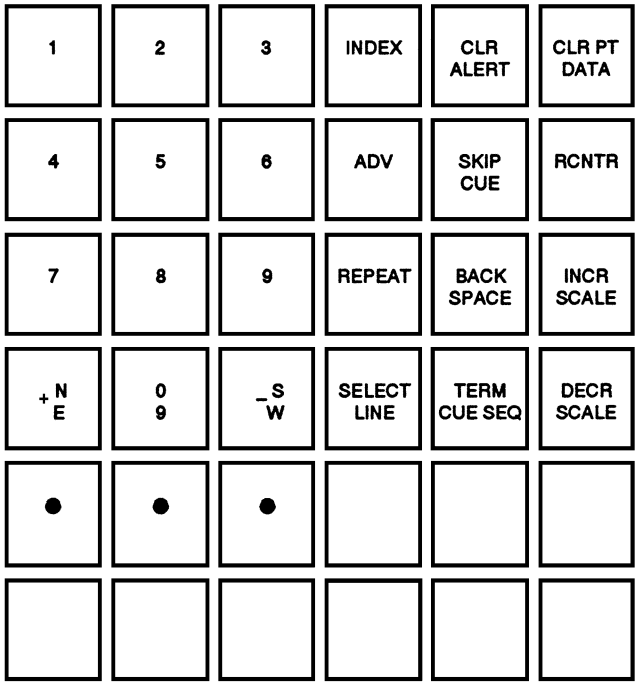

2.8.7.1.1 INDEX

TACCO
SENSO
COTAC

KEYSET

PURPOSE:

Displays the INDEX Tableau.

PREREQUISITE:

1. Operational program is loaded.

PROCEDURE:

1. Press INDEX (momentary).
   a. The INDEX Tableau is displayed.
   b. The following cue appears:

      ENT LINE NUM
      --

2. Respond to the cue.
3. Press ENTER.
   a. The selected tableau is displayed.

DEACTIVATION:

1. INDEX is deactivated when another tableau is displayed.
2. Deactivation result:
   a. The tableau and cue areas are cleared.

2.8.7.1.2 CLR ALERT

TACCO
SENSO
COTAC

KEYSET

PURPOSE:

Removes the most recent alert from the display.

PREREQUISITE:

A system alert is displayed.

PROCEDURE:

1. Press CLR ALERT (momentary).
   a. The most recent alert is cleared from all displays.
   b. The next alert stored in memory is displayed.

Note

A given system alert may be displayed at all stations simultaneously. Activation of CLEAR ALERT by any one operator will clear a given alert from all displays. Coordination between crewmembers should be exercised prior to the clearing of any alert so that the impact of that alert is understood by all crewmembers prior to its being cleared.

2.8.7.1.3 CLR PT DATA

TACCO
SENSO
COTAC

CLR PT DATA

KEYSET

PURPOSE:

Clears hooked symbols and data from the display.

PREREQUISITES:

1. Tactical plot, ESM plot, or radar PPI (scan-converted) is displayed on the MPD.
2. A clearable symbol is displayed on MPD (see Figure 2-34).

PROCEDURE:

1. Hook the symbol to be cleared.

Note

The hooked symbol flashes.

2. Press CLR PT DATA (momentary).
   a. The hooked symbol and the amplifying data are removed from the display.
3. If no HOOK VERIFY has been performed, the following cue is displayed:

```
SEL CLEAR POINT
1 ESM CNT     4 AIR
2 SUB TRK     5 RDRSUB
3 SUR TRK     6 REMOTE
```

4. Select category and press ENTER.
5. Selected category is removed from display.

2.8.7.1.4 ADV

TACCO
SENSO
COTAC

ADV

KEYSET

PURPOSE:

Displays the next page of a multiple page tableau.

PREREQUISITE:

1. A tableau is displayed.

PROCEDURE:

1. At the TACCO/SENSO station, press ADV (momentary).
   a. The next page of the tableau is displayed.

Note

If the last page of a tableau is displayed, the first page of the same tableau appears when ADV is pressed.

2. At COTAC station, press ADV.
   a. If the top half of a tableau page is displayed:
      (1) The bottom half of the same page appears.

Note

On the COTAC MPD, the top half of a tableau page displays lines 1 through 14, and the bottom half displays lines 15 through 30.

   b. When the bottom half of a single-page tableau is displayed:
      (1) Press ADV.
      (2) The top half of the same page appears.
   c. When the bottom half-page of a multipage tableau is displayed:
      (1) Press ADV.
      (2) The top half of the next page appears.
   d. When the bottom half of the last page of a tableau is displayed:
      (1) Press ADV.
      (2) The top half of the first page appears.

SYMBOL	CLEAR POINT DATA			DESTROY DATA	
	CLEARS ONLY	CLEARS & DESTROYS	NO EFFECT	DESTROYS	NO EFFECT
ACTIVE GEO AIDS			X		X
AIRCRAFT MARK		X		X	
AIRCRAFT TRACK HISTORY			X		X
CONTACTS	X			X	
CONTINUOUS PREDICT			X		X
CV			X		X
DATA LINK (REMOTE CONTACTS)	X			X*	
DEPOSITED GEO AID		X		X	
DISTRESSED VESSEL			X	X	
DOWNED AIRCRAFT			X	X	
MAN IN WATER			X	X	
FAR ON CIRCLE			X		X
FIXES	X			X	
FIX HISTORY SYMBOLS			X	X	
FLY-TO-POINTS, ORBIT CIRCLE			X		X
FLY-TO-POINTS (NONALTERNATE ACTION)		X		X	
HOOK			X		X
LATITUDE/LONGITUDE		X		X	
READOUTS					
LOST CONTACT		X		X	
NEW UNACKNOWLEDGED	X			X	
CONTACTS					
NON SUB		X		X	
ON TOP		X		X	
OWN AIRCRAFT			X		X
PROBABILITY CONTOURS			X		X
RANGE CIRCLE		X		X	
RANGE RADIUS CIRCLE		X		X	
REFERENCE MARK		X		X	
SINGLE PREDICTED POSITION			X		X
SONOBUOYS		X		X	
TRACKS	X			X	
WEAPON SPLASH POINT		X		X	

*All remote (DATA LINK) contacts may be destroyed, but will be redisplayed if received on another net cycle.

Figure 2-34. Clear/Destroy Display Symbols

2.8.7.1.5 SKIP CUE

TACCO
SENSO
COTAC

KEYSET

PURPOSE:

Bypasses an optional cue and proceeds to the next cue in the sequence.

PREREQUISITE:

1. Optional cue is displayed.

PROCEDURE:

1. Press SKIP CUE (momentary).

   a. The displayed optional cue is cleared from the MPD.

   b. If the cue is part of a sequence, the next cue is displayed.

   c. If the displayed cue is the last cue in the sequence, the function terminates.

2.8.7.1.6 RCNTR

TACCO
SENSO
COTAC

KEYSET

PURPOSE:

Recenters the display around either (1) own aircraft symbol or (2) a hooked position on the display.

PREREQUISITE:

1. TAC PLOT, ESM plot, scan-converted, or raw radar PPI is active.

PROCEDURE:

1. To recenter the display on a hooked position:

   a. Position the hook at the desired geographic coordinates.

      (1) Press HOOK VERIFY (momentary).

      (2) Press RCNTR (momentary).

      (3) The display recenters around the hooked position.

2. To recenter the aircraft around own aircraft position:

   a. Press RCNTR.

      (1) The display recenters around own aircraft position.

Note

The display scale is not affected when the recenter function is activated.

2.8.7.1.7 REPEAT

TACCO
SENSO
COTAC

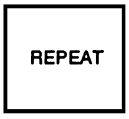

KEYSET

PURPOSE:

Allows the operator to insert a computer suggested character into a data entry cue with each switch depression.

PREREQUISITE:

1. A data entry cue containing a suggested entry is displayed.

PROCEDURE:

1. If the operator wishes to use the entire suggested entry, proceed to step 3.

2. If the operator wishes to modify a portion of the suggested entry, proceed to step 4.

3. Press ENTER.

   a. The displayed optional cue is cleared from the MPD.

   b. If the cue is part of a sequence, the next cue is displayed.

   c. If the displayed cue is the last cue in the sequence, the function terminates.

4. Press REPEAT (momentary).

   a. The first character of the suggested entry will appear in the character space directly above the last character in the suggested entry.

5. Repeat step 4.

   a. The second character of the suggested entry will appear in the character space directly above the last character in the suggested entry.

   b. The first character moves one space to the left.

6. Repeat step 4 for each character that does not require modification. Use the keyset to modify the desired character. Use the keyset or REPEAT, as required, to complete all character spaces.

7. Press ENTER.

2.8.7.1.8 BACK SPACE

TACCO
SENSO
COTAC

KEYSET

PURPOSE:

Removes character entries from the cue verification area and moves entries one space to the right.

PREREQUISITE:

1. Operator entered characters are displayed in the cue verification area of a data entry cue.

PROCEDURE:

1. Press BACK SPACE (momentary).

   a. The last entered character is removed from the display.

   b. All remaining characters in the cue verification area are moved one space to the right.

2.8.7.1.9 INCR SCALE

TACCO
SENSO
COTAC

KEYSET

PURPOSE:

Increases the range scale of the TAC PLOT, ESM plot, and radar displays by multiples of two.

PREREQUISITE:

1. TAC PLOT, ESM plot, or radar mode is active.

PROCEDURE:

1. Press INCR SCALE (momentary).

   a. If no alert appears, the display range is doubled.

   b. If the SCALE LIMIT alert appears, the display is at maximum scale.

Note

- The scale increments in TAC PLOT and ESM modes are 2, 4, 8, 16, 32, 64, 128, 256, 512, and 1,024 nm.
- The scale increments in the navigation/ weather and surface search modes are 8, 16, 32, 64, 128, and 200 nm.
- The scale increments in the radar periscope mode are 8, 16, and 32 nm.
- The range scale readout represents the distance from display center to any one of the four cardinal points.

2.8.7.1.10 SELECT LINE

TACCO
SENSO
COTAC

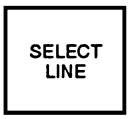

KEYSET

PURPOSE:

Selects a line within a tableau other than the INDEX Tableau.

PREREQUISITE:

1. A modifiable tableau is displayed.

PROCEDURE:

1. Press SELECT LINE (momentary).
   a. The following cue appears:

      ENT LINE NUM
      XX

   b. The first modifiable line number of the displayed tableau is the suggested entry.
2. Respond to the ENT LINE NUM cue.

Only line numbers with modifiable lines may be selected.

3. Press ENTER.
   a. The following cue appears:

      MODIFY LINE XX

4. Respond to the MODIFY LINE cue.
   a. Enter modifications to the displayed tableau line.
5. Press ENTER.
   a. The tableau line is modified as directed.
   b. MODIFY LINE cue is redisplayed for the next modifiable line of the tableau.

DEACTIVATION:

1. SELECT LINE is deactivated when one of the following occurs:
   a. TERM CUE SEQ is pressed.
   b. Another tableau is displayed.
   c. A function requiring use of the cue area is activated.
2. Deactivation result:
   a. ENT LINE NUM cue is removed from the cue area.
   b. ENT LINE NUM cue remains displayed if the INDEX Tableau is selected for display.

2.8.7.1.11 TERM CUE SEQ

TACCO
SENSO
COTAC

KEYSET

PURPOSE:

Terminates a series of optional cues.

PREREQUISITE:

1. Optional cue is displayed.

PROCEDURE:

1. Press TERM CUE SEQ (momentary).
   a. The displayed cue is cleared.
   b. The next cue in the sequence is inhibited.

Note

TERM CUE SEQ may deactivate a function if the optional cues would have completed the function. However, exceptions may exist with certain functions and are described in their respective operating procedures.

2.8.7.1.12 DECR SCALE

TACCO
SENSO
COTAC

KEYSET

PURPOSE:

Decreases the display range scale of the TAC PLOT, ESM plot, and radar display modes by multiples of two.

PREREQUISITE:

1. TAC PLOT, ESM plot, or radar mode is active.

PROCEDURE:

1. Press DECR SCALE (momentary).
   a. If no alert appears, the display range in tactical plot or ESM mode is halved.
   b. If the alert NOT AVAIL appears, the TAC PLOT, ESM, or radar display mode is not active.
   c. If the alert SCALE LIMIT appears, the display is at minimum scale.

Note

- In TAC PLOT and ESM modes, the scale step decreases are 1,024, 512, 256, 128, 64, 32, 16, 8, 4, and 2 nm.
- In surface search and navigation weather radar modes, the following scales are available: 200, 128, 64, 32, 16, and 8. In periscope mode, the following scales are available: 32, 16, and 8.

2.8.7.1.13 NUMERIC ENTRY

TACCO
SENSO
COTAC

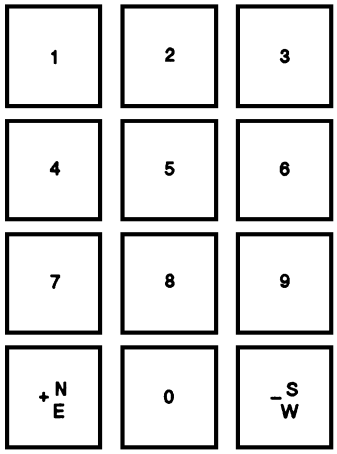

KEYSET

PURPOSE:

Enters numbers and direction (north, south, east, west, or + or - sign) in response to cues.

PREREQUISITES:

1. Keyset is in normal mode.
2. A cue response is required by the program.
3. Keyset numeric legends are lighted green.

PROCEDURE:

1. Press the appropriate numeric switches (momentary).
   a. Numbers appear in the cue verification area of the display.
   b. Operator visually verifies the numbers.
2. Press ENTER.
   a. The cue is cleared from the display.
   b. The numbers in the cue verification area are entered into the GPDC.

2.8.7.2 TACCO/SENSO Alphanumeric Mode. Change from the normal mode into the alphanumeric mode, press the black lower left corner switch of the six-by-six switch group. The switch legend ALPHA NUM lights green and the alphanumeric mode-shift up or alphanumeric mode-shift down legend appears, whichever of the two modes was last active.

The following tableaus may be modified by using the alphanumeric mode:

1. Note pad
2. Rig
3. Flight Summary (pages 1 and 5 only).

The alphanumeric upper shift activates the following functions:

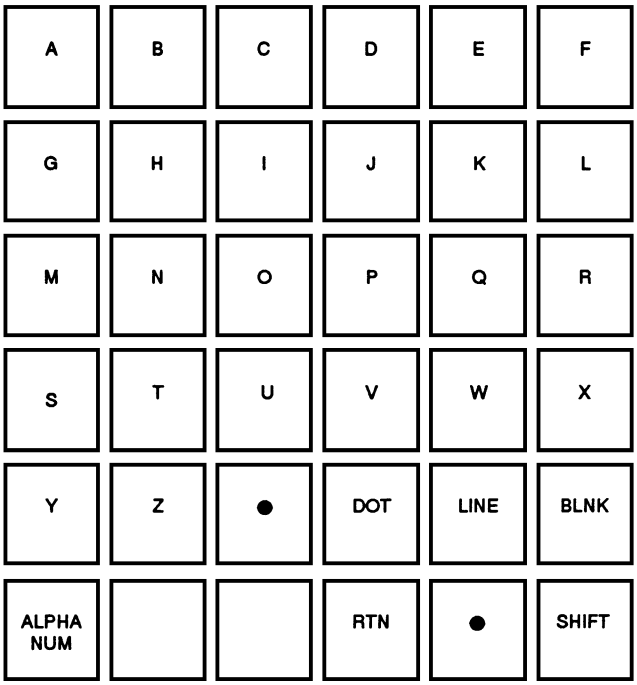

The alphanumeric lower shift activates the following functions:

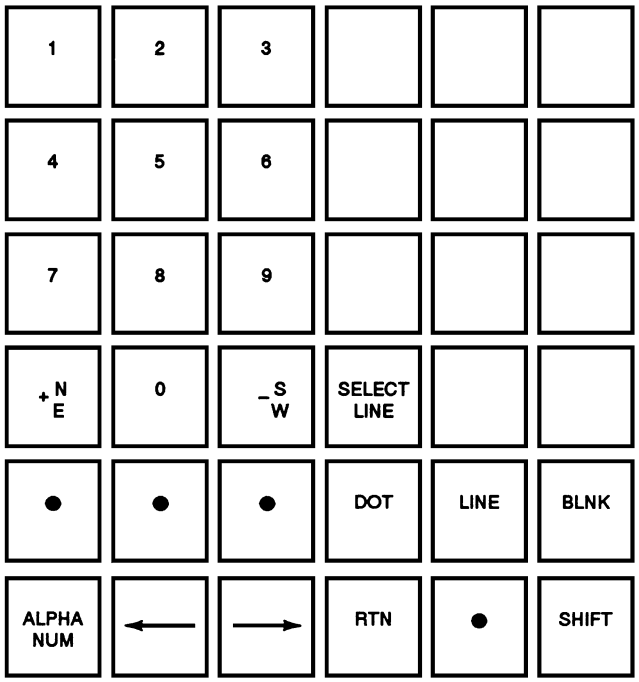

In alphanumeric lower shift, numbers may be entered in the special tableaus but may not be used to answer any other cues or modify any other tableaus.

DOT — Places a dot into a data entry in both upper and lower shifts.

LINE — Removes all entered characters in the verification area in both upper and lower shift. If no characters are entered, the computer ignores the input.

BLNK — (BLANK) Enters a blank space into a data entry in both upper and lower shifts.

← — (LEFT SPACE ARROW) Moves all entered characters on the verification area one space to the left in both alphanumeric shifts. If the characters are already at the far left, the program ignores the input.

→ — (RIGHT SPACE ARROW) Causes function identical to left space arrow except that movement is to the right.

RTN — (RETURN) Transfers a line of data from the cue verification area to a tableau modifiable by alphanumerics.

Note

- If no line is selected, these data are transferred to the highest modifiable line that does not already have data displayed.
- If a line number is selected prior to construction of the line, these data are transferred to that line.
- Successive lines of data can be constructed, one at a time in the cue verification area and transferred to a tableau.

Note

Data may be retained in the tableau for further entry and/or editing by exiting the ALPHANUMERIC mode and returning to complete the entry at a later time.

SHIFT

Shifts the ALPHANUMERIC mode from upper to lower or lower to upper, successively pressing switch to the opposite shift.

The numbers 0 through 9, + N E, and – S W switches illuminate green (available) only when a cue response is required by the program. Pressing one or more consecutive number switches displays the numbers in the cue verification area until entered into the GPDC database in response to the displayed cue. Upon completion of the cueing sequence, the switch lighting is extinguished.

Pressing the + N E and – S W in some cue responses displays the + or – when appropriate.

As the first character for latitude, pressing + N E displays N (north) in the first character position and – S W displays S (south). Pressing any other numeric results in an INVALID ENTRY alert when ENTER is pressed.

As the first character for a longitude entry, pressing a + N E entry displays E (east) and – S W displays W (west). Pressing any other numeric results in an INVALID ENTRY alert when ENTER is pressed.

2.8.8 Display Control Functions

2.8.8.1 TACCO/SENSO Display Control. The display control switches, used to control and modify the MPD displays, has one function. The upper switch legends are associated with the TACCO mode and light when the TACCO switch is amber. The SENSO mode/lower matrix select switches are no longer available or assigned. The TACCO mode display control functions are discussed in the following procedures. The various display control switches follow the standard green, amber, and black lighting convention.

TACCO MODE

VECTOR	REF/AC MARK	CLR TAC PLOT	ACK CNTCT	DSTRY DATA
RANGE RADIUS	AMPLFY	RETAIN SYMBOL	MAD/RDR RANGE	TABLE EXTRCT
DPOSIT SYMBOL	RANGE CIR	EXPAND CIR	ENTER FTP	TACCO — — — SENSO

2.8.8.1.1 VECTOR

TACCO
SENSO
COTAC

VECTOR

DISPLAY CONTROL

PURPOSE:

Provides a vector on the MPD with bearing and range readout between a selected point and the movable hook symbol.

PREREQUISITE:

1. TAC PLOT, ESM plot, or radar PPI is displayed on the MPD.

PROCEDURE:

1. Determine the point of origin for the vector.
   a. If the vector is to originate from own aircraft position, proceed to step 2.
   b. If the vector is to originate from a hooked position, proceed to step 3.
2. Press VECTOR (lights amber).
   a. If no alert appears, a vector from the own aircraft symbol to the hook symbol is displayed on the MPD.
      (1) Terminal end of the vector moves with the hook symbol.

(2) Vector readout (bearing and range) is displayed adjacent to the hook symbol.

(3) Vector readout varies with respect to hook movement and aircraft movement.

Note

- True bearing from own aircraft to vector symbol is displayed.
- Range is displayed in nautical miles if the display scale is 32 nm or greater.
- Range is displayed in yards if the display scale is 16 nm or less.
- Vector symbol (V) appears at the side of the hook symbol.
- If own aircraft symbol is off the display, the vector originates on the edge of the display.

3. If the vector is to originate from a hooked position, hook the desired position on the MPD.

4. Press VECTOR (lights amber).

a. If no alert appears, a vector from the hooked position to the hook symbol is displayed on the MPD.

(1) Terminal end of the vector moves with the hook symbol.

(2) Vector readout (bearing and range) is displayed adjacent to the hook symbol.

(3) Vector readout varies with respect to hook symbol movement.

Note

- True bearing from the origin of the vector is displayed.
- Range is displayed in nautical miles if the display scale is 32 nm or greater.
- Range is displayed in yards if the display scale is 16 nm or less.
- Vector symbol (V) appears at the side of the hook symbol.

DEACTIVATION:

1. VECTOR is deactivated when pressed if the legend is amber.

2. Deactivation results:

a. VECTOR legend changes from amber to green.

b. Vector, vector symbol, and range/bearing readout are removed from the display.

2.8.8.1.2 REF/AC MARK

TACCO
SENSO
COTAC

DISPLAY
CONTROL

PURPOSE:

Displays a reference mark at a hooked position on the MPD or an aircraft mark at the aircraft position on the MPD.

PREREQUISITE:

1. TAC PLOT, ESM plot, or scan-converted radar PPI is displayed on the MPD.

PROCEDURE:

1. The operator chooses one of the following:

a. If a reference mark is to be displayed, proceed to step 2.

b. If an aircraft mark is to be displayed, proceed to step 4.

2. Hook the desired location on the MPD.

3. Press REF/AC MARK (momentary).

[ ]

a. If no alert appears, a reference mark is displayed on the MPD at the hooked position.

4. To display an aircraft mark at the aircraft position on the MPD, press REF/AC MARK.

[A]

   a. If no alert appears, an aircraft mark is displayed on the MPD at the position of own aircraft symbol.

DEACTIVATION:

1. Reference marks and aircraft marks will remain on tactical or PPI display until removed by one of the following:

   DSTRY DATA
   CLR PT DATA

2. Reference marks and aircraft marks removed from tactical or PPI display are destroyed and removed from the database.

2.8.8.1.3 CLR TAC PLOT

TACCO
SENSO
COTAC

DISPLAY
CONTROL

PURPOSE:

Allows the operator to clear tactical symbology from the MPD with a single switch to avoid graphic overload conditions and delay in additional processing functions.

PREREQUISITE:

1. Display is in TAC PLOT, ESM plot, or PPI scan-converted radar mode.

PROCEDURE:

1. Press CLR TAC PLOT (lights amber).

Note

- CLR TAC PLOT is activated (lights amber at TACCO and SENSO stations) automatically when ESM or PPI scan-converted radar plot is displayed.
- COTAC display control functions do not light amber when active.

   a. Clears (C), or remains displayed (D) symbols as shown in Figure 2-35.

   b. Display is limited to the two highest priority FTPs.

DEACTIVATION:

1. CLR TAC PLOT is deactivated when pressed.

Note

- CLR TAC PLOT is also deactivated when an ESM or scan-converted radar PPI plot is replaced by a TAC PLOT.
- Deactivating CLEAR TAC PLOT on ESM plot results in the TAC PLOT emitter line of bearing and contact number displayed over ESM emitter line of bearing and AIL number.

2. Deactivation results:

   a. Switches become available that were deactivated.

   b. Display of additional FTPs.

   c. Redisplay of all symbology cleared by activating the function.

2.8.8.1.4 ACK CNTCT

TACCO
SENSO
COTAC

DISPLAY
CONTROL

PURPOSE:

Acknowledges a new contact symbol on the display and stops contact symbol flashing.

PREREQUISITES:

1. TAC PLOT, ESM plot, or scan-converted radar PPI is displayed on the MPD.

2. ACK CNTCT alert is displayed on the MPD.

SYMBOL	EXISTING ENTRIES	NEW ENTRIES	REMARKS
Air Tracks and Fixes	C	D	Redisplayable
ESM Contacts	C	D	Redisplayable
Fly-to-Point	D	D	Two highest priority
Hook/Target Designator	D	N/A	Not affected by activity
Remote (Data Link) Contacts	C	D	Redisplayable
Remote Sonobuoys	C	D	Redisplayable
Subsurface Tracks and Fixes	C	D	Redisplayable
Surface Tracks and Fixes	C	D	Redisplayable
Continuous Predict Position	D	D	
Datum	C	D	
Distressed Vessel	C	D	
Downed Aircraft	C	D	
Expand Circle	D	D	
Farthest on Circle	C	D	
Fix History	C	D	
Lat/Long Readouts	C	D	
MAD/Radar Range Circle	D	D	
Man in Water	C	D	
NOTAC Circle	C	D	
On Top	C	D	
Probability Contour	C	D	
Range Radius Circle Active	D	D	
Range Radius Circle Deposited	C	D	
Reference Marks	D	D	
Single Predict Position	C	D	
Special Pattern	C	D	
SUS	C	D	
Vector Active	D	D	
Vector Deposited	C	D	
Weapon Splash Point	C	D	

Legend:
C = Clears
D = Remains displayed

Figure 2-35. Clear Tactical Plot Symbols

PROCEDURE:

1. Press ACK CNTCT (momentary).

   a. If no alert appears, all new contacts within the present display scale stop flashing.

      (1) Contacts and fixes stop flashing at all stations when acknowledged at any station.

      (2) ACK CNTCT alert is removed from the MPD.

   b. If the following alert appears:

      CNTCT OFF SCALE

      (1) New contacts are not within the present display scale at the requesting station.

      (2) Contacts are not acknowledged and continue to flash at other stations where displayed.

2.8.8.1.5 DSTRY DATA

TACCO
SENSO
COTAC

DISPLAY
CONROL

PURPOSE:

Destroys graphic data and any amplifying data pertaining to that data from the display and computer memory (see Figure 2-34).

PREREQUISITES:

1. TAC PLOT, ESM plot, or scan-converted radar PPI displayed on MPD.

2. A destroyable symbol displayed on MPD (see Figure 2-34).

PROCEDURE:

1. Hook the destroyable symbol selected to be destroyed.

2. Press DSTRY DATA (momentary).

   a. If no alert appears, the hooked symbol is removed from all displays and the system database.

2.8.8.1.6 RANGE RADIUS

TACCO
SENSO
COTAC

DISPLAY
CONTROL

PURPOSE:

Constructs a circle with a hooked position as the center and the present hooked position on the circumference.

PREREQUISITES:

1. TAC PLOT, ESM plot, or scan-converted radar PPI is active.

2. COTAC CONICS matrix is active.

PROCEDURE:

1. Perform a hook verify at the position of the desired center of circle.

2. Press RANGE RADIUS (lights amber).

   a. A circle is displayed around the hooked point with the circumference of the circle passing through the hook symbol.

Note

- As the hook is moved, the radius of the circle will adjust so that the circle always passes through the hook symbol.

- The range readout appears in yards on the 16 nm scale or less and in nautical miles on the 32 nm scale or greater. The legend remains at the top of the displayed circle.

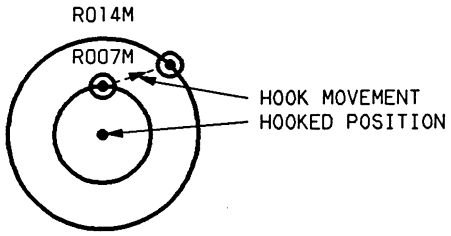

DEACTIVATION:

1. RANGE RADIUS is deactivated if pressed when amber.
2. Deactivation results:
   a. The range radius circle is removed from the display.
   b. RANGE RADIUS changes from amber to green.

2.8.8.1.7 AMPLFY

TACCO
SENSO
COTAC

AMPLFY

DISPLAY CONTROL

PURPOSE:

Displays amplifying data, such as time of contact or track number. Also displays contact name previously entered via RIG Tableau.

PREREQUISITE:

1. TAC PLOT, ESM plot, or scan-converted radar PPI is displayed on the MPD.

PROCEDURE:

1. Determine what symbols on the display require amplifying data.
   a. If amplifying data are required for a single symbol on the display, proceed to step 2.
   b. If amplifying data are required for all symbols on the display, proceed to step 5.
2. To obtain amplifying data of a single symbol on the display, hook the symbol.
3. Press AMPLFY (lights amber).
4. If no alert appears on the MPD, amplifying readout information is displayed with the designated symbol on the plot area of the MPD.
   a. If additional amplifying data are available, an AMPLIFYING DATA Tableau is displayed in the tableau area of the MPD.
5. To obtain amplifying data for all symbols on the display, press AMPLFY (lights amber).
   a. If no alert appears on the MPD, amplifying readout information appears with each symbol on the display.

DEACTIVATION:

1. AMPLFY is deactivated when one of the following occurs:
   a. AMPLFY is pressed when amber.
   b. TN AMPLFY function is activated.
2. Deactivation results:
   a. AMPLFY legend changes from amber to green.
   b. Amplifying readouts are removed from the plot area of the display.
   c. AMPLIFYING DATA Tableau, if displayed, remains in the tableau area of the MPD until another tableau is displayed.

2.8.8.1.8 RETAIN SYMBOL

TACCO
SENSO
COTAC

RETAIN SYMBOL

DISPLAY CONTROL

PURPOSE:

Retains displayed and redisplayed symbols on the display when the associated redisplay function is deactivated.

PREREQUISITES:

1. TAC PLOT, ESM plot, or scan-converted radar PPI is displayed on the MPD.
2. A symbol is currently displayed on the MPD that has been redisplayed.

3. One of the following matrix A REDSPL option select functions is active: ESM CNTCT, SUB TRK, SUR TRK, AIR TRK.

PROCEDURE:

1. Hook the redisplayed symbol to be retained.
2. Press RETAIN SYMBOL (momentary).
   a. If no alert appears, the status of the redisplayed hooked symbol is changed from a redisplayed cleared symbol to a displayed symbol.
      (1) Subsequent deactivation of the associated REDSPL function will not cause the retained symbol to clear from the MPD.

2.8.8.1.9 MAD/RDR RANGE

TACCO
SENSO
COTAC

DISPLAY
CONTROL

PURPOSE:

Displays on the MPD TAC PLOT a radar range circle representing the effective area each system is capable of searching.

PREREQUISITE:

1. TAC PLOT, ESM plot, radar PPI active.

PROCEDURE:

1. Press MAD/RDR RANGE (lights amber).
   a. If no alert appears, radar range circle is displayed about own aircraft symbol on the MPD.
      (1) A radar range circle is displayed if the display scale is set for 32 nm or greater.
   b. Range circle varies in size with respect to aircraft altitude.
      (1) Radar circle increases as altitude increases.

DEACTIVATION:

1. MAD/RDR RANGE is deactivated if pressed when the switch legend is amber.
2. Deactivation results:
   a. Radar range circle is removed from display.
   b. MAD/RDR RANGE legend changes from amber to green.

2.8.8.1.10 TABLE EXTRCT

TACCO
SENSO
COTAC

DISPLAY
CONTROL

PURPOSE:

Extracts the contents of a currently displayed tableau.

Note

Performing a TABLE EXTRCT of the RIG (index 17) and the NOTE PAD (index 18) Tableaus will clear them of all information.

PREREQUISITE:

1. A tableau is displayed on the MPD.

PROCEDURE:

1. Press TABLE EXTRCT (momentary).
   a. If no alert appears, the currently displayed tableau is recorded on the DMTU for post-flight analysis.
   b. If the following alert appears:

      DATA EXTR UNAVAIL

      (1) Attempt to extract a tableau was made after the DMTU has been declared defective. Function will not operate.
   c. If the following alert appears:

      ZZZZ DMTU REWIND

      (1) When the DMTU reaches the end of a track, the heads are repositioned to the beginning of the next available track.
      (2) DMTU REWIND alert remains displayed until the repositioning is completed. When repositioning is complete, DMTU READY TRACK X alert is displayed.

2.8.8.1.11 DPOSIT SYMBOL

TACCO
SENSO
COTAC

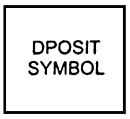

DISPLAY CONTROL

PURPOSE:

Displays any combination of range radius circles, range circles, and vectors. Up to four symbols may be deposited as a tactical aid.

PREREQUISITES:

1. TAC PLOT or ESM plot is active.
2. Depositable symbol is displayed.

PROCEDURE:

1. The operator chooses one of the following:
   a. If only one depositable symbol is displayed, proceed to step 2.
   b. If more than one depositable symbol is displayed, proceed to step 3.
2. Press DPOSIT SYMBOL (momentary).
   a. The symbol is deposited at the display point on the MPD.
3. Press DPOSIT SYMBOL (lights amber).
   a. The following cue appears:

      SEL DPOSIT SYMBOL
      1 VECTOR
      2 RANGE RADIUS CIR
      3 RANGE CIR

4. If one of the following alerts appears when DPOSIT SYMBOL has been pressed:
   a. CAPACITY EXCD
      (1) Four symbols have already been deposited.
      (2) New symbol is not accepted.
   b. DISPLAY TABLE EXCD
      (1) The allowable limit for displayable items (including items not currently on the display) has been exceeded.
      (2) New symbol is not accepted.
   c. DSPL TABLE LIM
      (1) There is capacity for only two more displayed items.
      (2) New symbol is accepted.
   d. DISPLAY BUFFER EXCD
      (1) The allowable limit for displayed items has been exceeded.
      (2) New symbol is not accepted.
5. Respond to the cue.
   a. Press 1, 2, or 3 on the keyset.
6. Press ENTER.
   a. Selected symbol is deposited.
   b. Legend lights green.

Note

If DPOSIT SYMBOL switch is pressed during the cue sequence, the function deactivates and the legend lights green.

7. If more than one symbol is to be deposited, repeat step 3.

DEACTIVATION:

1. DPOSIT SYMBOL is deactivated:
   a. When only one depositable symbol is displayed and DPOSIT SYMBOL is pressed.
   b. When the cueing sequence is complete.
   c. When DPOSIT SYMBOL is pressed and the alerts: CAPACITY EXCD, DSPL BUFFER EXCD, or DSPL TABLE EXCD appear on the operator's MPD.
2. Deactivation result:
   a. DPOSIT SYMBOL legend lights green.

2.8.8.1.12 RANGE CIR

TACCO
SENSO
COTAC

RANGE CIR

DISPLAY CONTROL

PURPOSE:

Displays a circle centered on and positioned with the hook symbol. With trackball movement, the range circle remains centered on the hook symbol.

PREREQUISITES:

1. TAC PLOT, ESM plot, or radar PPI is active.
2. COTAC CONICS matrix is active.

PROCEDURE:

1. Press RANGE CIR (lights amber)
   a. One of the following cues appear:

      ENT RADIUS-NM
      ----
      for display scales 32 nm or greater.

      ENT RADIUS-YDS
      -----
      for display scales less than 32 nm.

2. Respond to the ENT RADIUS-NM cue or the ENT RADIUS-YDS cue.
   a. Press numbers (0 through 9999) on the keyset to select the desired nm radius or (0 through 99999) on the keyset to select the desired number of yards radius.
   b. If term cue sequence is selected the function deactivates.
3. Press ENTER.
   a. A range circle is displayed with the hook symbol as the center and the entered range in nautical miles as the radius.

DEACTIVATION:

1. RANGE CIR is deactivated if pressed when amber.
2. Deactivation results:
   a. The range circle is removed from the display.
   b. RANGE CIR legend changes from amber to green.

2.8.8.1.13 EXPAND CIR

TACCO
SENSO
COTAC

EXPAND CIR

DISPLAY CONTROL

PURPOSE:

Displays an expanding circle around a hooked position. Used to depict a target opening rate from a fix or a datum. Uses an operator entered estimate of target speed.

PREREQUISITES:

1. TAC PLOT, ESM plot, or scan-converted radar PPI is active.
2. COTAC CONICS matrix is active.

PROCEDURE:

1. Hook the desired position.
   a. If the display scale is 32 nm or greater, proceed to step 2.
   b. If the display scale is less than 32 nm, proceed to step 4.
2. Press EXPAND CIR (lights amber).
   a. The following cue appears:

      ENT RADIUS-NM
      ----
3. Respond to the ENT RADIUS-NM cue.
   a. Press numbers (0 through 9999) on the keyset to select the initial circle radius.
   b. Proceed to step 6.

4. Press EXPAND CIR (lights amber).

   a. The following cue appears:

   ENT RADIUS-YDS
   -----

5. Respond to the ENT RADIUS-YDS cue.

   a. Press numbers (0 through 99999) on the keyset to select the initial circle radius.

6. Press ENTER.

   a. The following cue appears:

   ENT EXPAN RATE-KTS
   --

7. Respond to the ENT EXPAN RATE-KTS cue.

   a. Enter the rate of circle expansion in knots.

8. Press ENTER.

   a. The range circle is displayed with the initial radius in nm/yards centered around the hooked position. The circle expands at the selected rate in knots and is updated five times per second.

DEACTIVATION:

1. EXPAND CIR is deactivated if pressed when amber.

2. Deactivation results:

   a. The circle is removed from the display.

   b. EXPAND CIR legend changes from amber to green.

2.8.8.1.14 ENTER FTP

TACCO
SENSO
COTAC

ENTER FTP

DISPLAY CONTROL

PURPOSE:

Enters a monitor or designated/undesignated normal FTP into the system and displays it on the appropriate TAC PLOTS.

PREREQUISITES:

1. TAC PLOT, ESM plot, or scan-converted radar PPI display is active.

2. COTAC SCH or TAC NAV is active.

PROCEDURE:

1. Press ENTER FTP (lights amber).

   a. The following cue appears:

   SEL FTP
   1 NORM DESIG
   2 NORM UNDESIG
   3 MONITOR

   b. If the following alert appears:

   CAPACITY EXCD

   the system capacity for displaying FTPs will be exceeded by the entry of an FTP.

Note

The maximum number of FTPs in the system is 11; 1 weapon FTP and 10 other FTPs, which may be made up of any combination of the remaining types. A list of FTP types and the maximum number of each type allowed in the system is shown:

TYPE FTP	NUMBER ALLOWED IN SYSTEM
Weapon	1
Expendable	6
Intercept	1
Orbital, Tangential Datum	1
Normal	10
Monitor	10

   (1) Alert causes the function to deactivate. ENTER FTP remains green.

2. Respond to the SEL FTP cue.

   a. If decision 1 is selected, proceed to step 3.

   b. If decision 2 is selected, proceed to step 14.

   c. If decision 3 is selected, proceed to step 21.

3. For response to decision 1 (normal designated FTP) of the SEL FTP cue, the operator may enter an FTP at a geographic position defined by latitude/ longitude, or at a hooked position on the TAC PLOT.

   a. To enter a normal designated FTP at a geographic position, proceed to step 4.

   b. To enter a normal designated FTP at a hooked position on the TAC PLOT, proceed to step 10.

4. Press number 1 on the keyset to select a normal designated FTP at a geographic position.

5. Press ENTER.

   a. The following cue appears:

      ENT LATITUDE
      - -- --.---

   b. Enter the latitude. First character entry is north or south.

6. Press ENTER.

   a. The following cue appears:

      ENT LONGITUDE
      - --- --.---

   b. Enter the longitude. First character entry is east or west.

7. Press ENTER.

   a. The following cue appears:

      ENT BEARING-DEG
      ---

8. Enter aircraft desired track upon arrival at designated FTP.

9. Press ENTER.

   a. Normal designated FTP is displayed on TAC PLOTS at the position specified by operator entries.

      (Δ) NXX

Note

- A 1/2-inch vector on the FTP symbol indicates the direction of the aircraft track.
- Letter N indicates the FTP type as normal.
- XX represents a one- or two-digit priority number designating the priority of the FTP with respect to others of the same type.

   b. ENTER FTP lights green.

10. Hook a position on the tactical plot where an FTP is to be entered.

11. Press number 1 on the keyset to enter a normal designated FTP at a hooked position.

12. Press ENTER.

   a. The following cue appears:

      ENT BEARING-DEG
      ---

13. Perform procedures in steps 8 and 9.

14. For response to decision 2 (normal undesignated FTP) of the SEL FTP cue, the operator may enter an FTP at a geographic position defined by latitude/longitude, or at a hooked position on the TAC PLOT.

   a. To enter a normal undesignated FTP at a geographic position, proceed to step 15.

   b. To enter a normal undesignated FTP at a hooked position on the TAC PLOT, proceed to step 18.

15. Press number 2 on the keyset to enter a normal undesignated FTP at a geographic position.

16. Perform procedures in steps 5 and 6.

17. Press ENTER.

    a. Normal undesignated FTP is displayed on TAC PLOT at the position specified by operator entries.

       (Δ) NXX

Note

Letter N indicates FTP type as normal.

    b. ENTER FTP lights green.

18. Hook a position on the display where an FTP is to be entered.

19. Press number 2 on the keyset to enter a normal undesignated FTP at the hooked position.

20. Perform step 17.

21. To enter a monitor FTP on the TAC PLOT, hook the desired point on the display.

22. Press number 3 on the keyset.

23. Press ENTER.

    a. If no alert appears, a monitor FTP is displayed on TAC PLOT at the position specified by the operator.

       (Δ) NXX

Note

Letter M indicates FTP type as monitor.

       (1) ENTER FTP lights green.

DEACTIVATION:

1. ENTER FTP is deactivated when one of the following occurs:

    a. Function procedures are completed.

    b. ENTER FTP is pressed when amber.

    c. Another function requires use of the activating operator cue area.

2. Deactivation results:

    a. Cues associated with ENTER FTP are removed.

    b. ENTER FTP changes from amber to green.

2.8.8.2 COTAC Display Control. The COTAC display control and matrix select switches are trifunctional (divided into three parts). The A/B/C switch, located in the upper right corner of the switch group, selects one of the three switch segments. For example, with C selected, the lower switch legends are displayed and the A (upper left) and B (upper right) legends are not displayed. The C legends correspond with the COTAC display control functions. The COTAC display control switches are labeled as shown.

VECTOR	REF/AC MARK	CLR TAC PLOT	ACK CNTCT	DSTRY DATA	C
AMPLFY	RETAIN SYMBOL	MAD/RDR RANGE	TABLE EXTRCT	DPOSIT SYMBOL	VISUAL CNTCT

COTAC display control legends do not light amber when active.

The functions of the COTAC display control switches are the same as those described in the TACCO/SENSO display control switches, except VISUAL CNTCT. The VISUAL CNTCT function is not available to TACCO/SENSO.

TACCO/SENSO display control functions RANGE CIR, RANGE RADIUS, and EXPAND CIR are located in the COTAC CONICS matrix. The ENTER FTP is located in the COTAC SCH and TAC NAV matrices.

2.8.8.2.1 VISUAL CNTCT

COTAC | VISUAL CNTCT | DISPLAY CONTROL

PURPOSE:

To allow the operator to display, identify, and record the location of any visual sighted contact.

PREREQUISITE:

Matrix C is active.

PROCEDURE:

1. Press VISUAL CNTCT.

   a. The following cue appears:

      MISSILE SIGHTED
      1 YES
      2 NO

2. Respond to the MISSILE SIGHTED cue.

   a. If cue decision 1 (YES) is selected, the information is entered into the system, the contact is entered into data-link and the cue is removed from the display after performing step 3.

Note

A MISSILE SIGHTED track is automatically assembled for Link 11 transmission (since there is no symbol, the operator cannot drop track or verify track number). DATA SLNCE will not be overridden. If DATA SLNCE is active, there will be no alert to inform the operator that the track has not been transmitted.

   b. If cue decision 2 (NO) is selected, proceed to step 3.

3. Press ENTER.

   a. The following cue appears:

      ENT BEARING-DEG

Note

The bearing is measured in degrees, clockwise, relative to the aircraft heading.

4. Respond to the ENT BEARING-DEG cue.

   a. Press the desired numbers on the keyset.

5. Press ENTER.

   a. The following cue appears:

      ENT RANGE-NM
      --.-

Note

Target range is measured relative to the aircraft.

6. Respond to the ENT RANGE-NM cue.

   a. Press the desired numbers on the keyset.

7. Press ENTER.

   a. The range is entered into the system.

   b. The following cue appears:

      ENT LOCAL TN
      XXXX

8. Respond to the ENT LOCAL TN cue.

   a. Press desired the numbers on the keyset.

9. Press ENTER.

   a. The following cue appears:

      SEL CAT-ID

1	AIR	F	6	SUB	H
2	SURF	F	7	AIR	U
3	SUB	F	8	SURF	U
4	AIR	H	9	SUB	U
5	SURF	H			

   b. If entered track number was previously assigned, the SEL CAT-ID cue is not displayed and the contact is automatically assigned the same CAT-ID as the existing item with that track number.

10. Respond to the SEL CAT-ID cue (local).

   a. If cue decision 1, 4, 5, or 7 is selected, proceed to step 19.

   b. If cue decision 2 is selected, proceed to step 17.

c. If cue decision 3, 6, or 9 is selected, proceed to step 11.

d. If cue decision 8 is selected, proceed to step 15.

11. Press ENTER.

a. The following cue appears:

SURFACED SUB
1 YES
2 NO

12. Respond to the SURFACED SUB cue.

a. If decision 1 is selected, proceed to step 17.

b. If decision 2 is selected, proceed to step 13.

c. A SKIP CUE or term cue sequence response will assume NO to the cue.

13. Press ENTER.

a. The following cue appears:

SEL SUBSURF CLASS
1 NO STATEMENT
2 POSSIBLE SUB
3 PROBABLY SUB
4 CERTAIN SUB
5 NON SUB
OPTNL

14. Respond to the SEL SUBSURF CLASS cue.

a. If decision 1 or 5 is selected, proceed to step 23.

b. If decision 2 is selected, proceed to step 15.

c. If decision 3 or 4 is selected, proceed to step 17.

15. Press ENTER.

a. The following cue appears:

ENT CONF LEVEL
1-4

16. Respond to the ENT CONF LEVEL cue.

17. Press ENTER.

a. The following cue appears:

SEL CLASS AMP
1 PROPULSION UNK
2 PROPULSION CON
3 PROPULSION NUC
OPTNL

18. Respond to the SEL CLASS AMP cue.

a. Proceed to step 23.

19. Press ENTER.

a. The following cue appears:

SEL PRI ID AMP
1 EVALUATED UNK
2 ASSUMED FRIEND
3 ASSUMED HOST

20. Respond to the SEL PRI ID AMP cue.

a. Press 1, 2, or 3 on the keyset.

21. Press ENTER.

a. The following cue appears:

SEL PRI ID AMP
1 CONFIRMED FRIEND
2 AUXILIARY
3 SPECIAL MISSION
4 AMPHIBIOUS
5 LINE

22. Respond to the SEL PRI ID AMP cue.

a. Press 1, 2, 3, 4, or 5 on the keyset.

23. Press ENTER.

a. The parameters of the hooked track fixes or datum are modified.

b. Function deactivates.

Note

When a SKIP CUE option is available and selected for the SEL CAT-ID, and related cues, the parameter previously assigned to the track remains unchanged.

DEACTIVATION:

1. VISUAL CNTCT is deactivated when:

   a. Pressed during the cueing sequence.

   b. ACK CNTCT is pressed at the TACCO/ SENSO stations.

   c. Changing from a tactical to a nontactical display mode when a cue is displayed.

2.8.8.3 Pilot Display Control. The pilot display control (see Figure 2-36), located in the left console, contains the following on-line controls.

1. SONB (TASK NOT ASSIGNED is displayed if SONB is selected.)
2. CLEAR ALERT
3. A/C TRACK
4. EXTEND TRACK VECTOR
5. ESM T
6. INCR SCALE
7. SUR CNTCT
8. AUTO SCALE
9. RCNTR ON A/C
10. RCNTR ON FTP
11. DECR SCALE.

The above controls are explained in further detail, giving the purpose, prerequisite, step by step procedure, and deactivation.

2.8.8.3.1 SONB

PILOT DISPLAY CONTROL

TASK NOT ASSIGNED is displayed if SONB is selected.

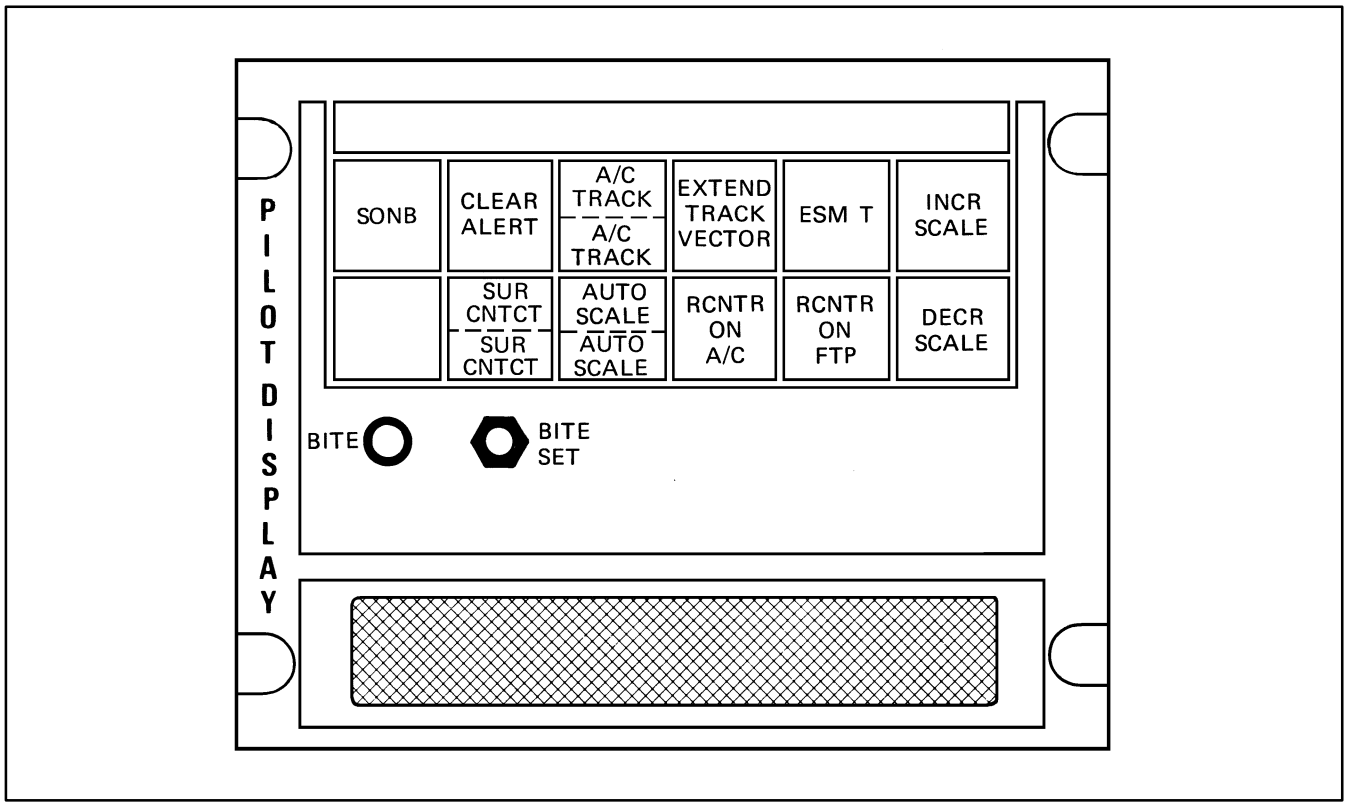

Figure 2-36. Pilot Display Control Panel

2.8.8.3.2 CLEAR ALERT

PILOT | CLEAR ALERT | DISPLAY CONTROL

PURPOSE:

Removes the latest system alert from all displays. Keyset and function alerts are not affected.

PREREQUISITE:

1. System alert is displayed.

PROCEDURE:

1. Press CLEAR ALERT (momentary).

   a. The most recent system alert is cleared from all displays.

   b. If more than one alert is displayed, CLEAR ALERT must be pressed once for each alert.

Note

- All alerts are not displayed on the pilot display. Alerts displayed on the pilot display are listed in Chapter 8.

- A given system alert may be displayed at all stations simultaneously. Activation of CLEAR ALERT by any one operator will clear a given alert from all displays. Coordination between crewmembers should be exercised prior to clearing of any alert so that the impact of that alert is understood by all crewmembers prior to its being cleared.

2.8.8.3.3 A/C TRACK

PILOT | A/C TRACK | DISPLAY CONTROL

PURPOSE:

Displays the last 15 positions of aircraft track history.

PREREQUISITE:

None.

PROCEDURE:

1. Press A/C TRACK (lights amber).

Note

- Aircraft track history is displayed as a series of symbols located in positions specified by aircraft past positions. A maximum of 15 symbols are displayed, with the oldest symbol being deleted as a new one appears.

- Own aircraft symbol indicates the aircraft's current position. A 1/2-inch vector from the center points in the direction of the aircraft track.

   a. If aircraft track function is active at another station, the following occurs on the pilot display:

      (1) Displays current aircraft track history symbols from any other tactical station.

      (2) Repetition rate will be the same as the activating station's established rate.

   b. If aircraft track function is not active at another station, the following occurs.

      (1) Aircraft track symbols are displayed on the pilot display at a 1-minute repetition rate.

DEACTIVATION:

1. A/C TRACK is deactivated when the following occurs:

   a. A/C TRACK is pressed when amber.

2. Deactivation results:

   a. Removal of all aircraft track history symbols.

   b. A/C TRACK changes from amber to green.

2.8.8.3.4 EXTEND TRACK VECTOR

PILOT DISPLAY CONTROL

PURPOSE:

Extends the vector associated with own aircraft symbol on the pilot display.

PREREQUISITE:

None.

PROCEDURE:

1. Press EXTEND TRACK VECTOR (momentary).
   a. Upon activation, the following occurs:
      (1) The vector associated with own aircraft symbol is increased from its normal length to an extended length.

DEACTIVATION:

1. EXTEND TRACK VECTOR is deactivated if pressed.
2. Deactivation result:
   a. The length of the vector is reduced from extended to the normal.

2.8.8.3.5 ESM T

PILOT DISPLAY CONTROL

PURPOSE:

Automatically provides the pilot with an ESM relative lethality plot.

PREREQUISITE:

1. Receipt of an ESM threat within 1.5 lethal range of the aircraft.

PROCEDURE:

1. ESM T switch initializes in the OFF position and the TAC PLOT is displayed.
2. Press ESM T (toggle)
   a. If TAC PLOT is displayed, ESM relative lethality plot is displayed.
   b. If ESM relative lethality plot is displayed, TAC PLOT is redisplayed.

DEACTIVATION:

1. ESM T is deactivated when ESM threats are no longer within lethal range.
2. Deactivation result:
   a. Display changes to TAC PLOT.

2.8.8.3.6 INCR SCALE

PILOT DISPLAY CONTROL

PURPOSE:

Permits the pilot to increase present display scale from 2 nm to 1,024 nm by multiples of two.

PREREQUISITE:

None.

PROCEDURE:

1. Press INCR SCALE (momentary).
   a. The range scale displayed is increased by a multiple of two each time the INCR SCALE is pressed (2, 4, 8, 16, and so forth).
   b. Scale numerics are displayed in the peripheral readout area of the pilot display.

2.8.8.3.7 SUR CNTCT

PILOT DISPLAY CONTROL

PURPOSE:

Permits the pilot to display all surface contacts which are visible at the present display scale.

PREREQUISITE:

None.

PROCEDURE:

1. Press SUR CNTCT (lights amber).
   a. Upon activation, all surface contacts within the present display scale are displayed on the pilot display.

Note

If the display scale changes while the function is active, all surface contacts within the new scale are displayed.

DEACTIVATION:

1. SUR CNTCT is deactivated if pressed when amber.
2. Deactivation results:
   a. All surface contact symbols are cleared from the display.
   b. SUR CNTCT changes from amber to green.

2.8.8.3.8 AUTO SCALE

PILOT | AUTO SCALE | DISPLAY CONTROL

PURPOSE:

Automatically causes the pilot display to shift to, and remain on, the lowest possible scale and still present the aircraft symbol. This function is normally used immediately after the RCNTR ON FTP is pressed since during all scale shifts, the geographic position at the center of the display does not change.

PREREQUISITE:

None.

PROCEDURE:

1. Press AUTO SCALE (lights amber).
   a. The pilot display automatically shifts to, and remains on, the lowest possible scale that still includes the aircraft symbol.

DEACTIVATION:

1. AUTO SCALE is deactivated if pressed when amber.
2. Deactivation result:
   a. AUTO SCALE changes from amber to green.

2.8.8.3.9 RCNTR ON A/C

PILOT | RCNTR ON A/C | DISPLAY CONTROL

PURPOSE:

Centers the aircraft symbol on the pilot display.

PREREQUISITE:

None.

PROCEDURE:

1. Press RCNTR ON A/C (momentary).
   a. The display on the pilot display is recentered on the aircraft symbol.
   b. If AUTO SCALE is active, the scale will automatically shift to 2 nm.

2.8.8.3.10 RCNTR ON FTP

PILOT | RCNTR ON FTP | DISPLAY CONTROL

PURPOSE:

Positions the highest priority FTP symbol in the center of the pilot display.

PREREQUISITE:

1. FTP entered in the system.

PROCEDURE:

1. Press RCNTR ON FTP (momentary).

   a. The pilot display is recentered on the highest priority FTP.

Note

If the aircraft symbol cannot be displayed on the current scale when recentered, the scale increases until the aircraft symbol can be displayed.

2.8.8.3.11 DECR SCALE

PILOT | DECR SCALE | DISPLAY CONTROL

PURPOSE:

Permits the pilot to decrease his present display, from 1,024 nm to 2 nm by factors of two.

Note

Scale decreases only to point where the aircraft symbol is still displayed.

PREREQUISITE:

None.

PROCEDURE:

1. Press DECR SCALE (momentary).

   a. The range scale displayed is decreased by a factor of two each time the DECR SCALE is pressed (1, 024, 512, 256, 128, and so forth).

   b. Scale numerics are displayed in the peripheral area of the pilot display.

2.9 DATA PROCESSING OPTION SELECT FUNCTIONS

The following matrices contain data processing functions not specifically associated nonacoustic sensors, navigation, communications, or armament. These matrices are grouped together as DPS matrices. The TACCO and SENSO have the following DPS matrices available with the INCOS tray configured to the TACCO mode:

1. PRGM CONT (program control)
2. REINIT (reinitialize)
3. REDSPL (redisplay)
4. PILOT DSPL (pilot display)
5. TAC AIDS (tactical aids)
6. SEARCH MODE (search mode).

The COTAC has the following DPS matrices available:

1. PGM CTL (program control)
2. RNZ (reinitialize)
3. RE DSP (redisplay)
4. PLT DSP (pilot display)
5. TAC AID (tactical aids)
6. SCH (search mode)
7. CON/PTA (conics/passive tracking algorithm)
8. DIA/ORT (diagnostics/operational readiness test).

2.9.1 PRGM CONT Matrix

TACCO
SENSO
COTAC | PRGM CONT | PRGM CNT

PURPOSE:

Displays option select function legends associated with PRGM CONT.

PREREQUISITE:

None.

PROCEDURE:

1. Press PRGM CONT (lights amber).

Note

- Program control legend on COTAC INCOS is PGM CTL.
- PGM CTL at COTAC station does not light amber when pressed. Legend goes black and matrix C AMPLFY legend appears.

a. PRGM CONT option select function legends are displayed in the upper half of the TACCO/ SENSO matrix B option select switches.

b. PGM CTL option select function legends at COTAC station are displayed in the upper half of matrix A option select switches.

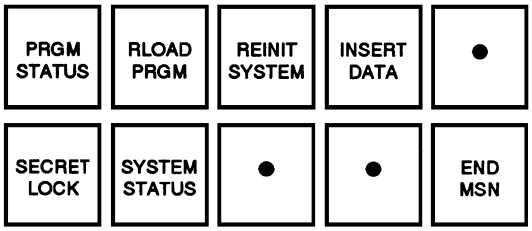

DEACTIVATION:

1. PRGM CONT matrix is deactivated when another matrix select switch is pressed that requires replacing of the option select legends.

2. Deactivation results:

a. PRGM CONT option select function legends are replaced by the option select function legends associated with another matrix select.

b. PRGM CONT matrix switch legend changes from amber to green.

2.9.1.1 PRGM STATUS Option

TACCO
SENSO
COTAC

PRGM CONT

TASK NOT ASSIGNED

2.9.1.2 RLOAD PRGM Option

TACCO
SENSO
COTAC

PRGM CONT

PURPOSE:

Reloads the system and requests, if available, the last block of safe data.

Note

If it is necessary to reload the program, program reload should be selected, vice the COMPUTER RESTART switch. This selection will save time by inserting previous responses to load cues that determine preflight data.

PREREQUISITE:

1. PRGM CONT/PGM CTL matrix is active.

PROCEDURE:

1. Press RLOAD PRGM (lights amber).

a. The following cue appears:

SEL VALIDITY
1 VALID
2 INVALID

2. Respond to the SEL VALIDITY cue.

a. If decision 1 is selected, proceed to step 4.

b. If decision 2 is selected, proceed to step 3.

c. Press the desired number on the keyset.

3. Press ENTER.

a. RLOAD PRGM changes from amber to green.

4. Press ENTER.

   a. The following cue appears:

      SEL PROGRAM
      1 OPERATIONAL
      2 OPERATIONAL CONT
      3 SYSTEM TEST
      4 GPDC DIAG RECYCLE
      5 FIRMWARE

5. Respond to the SEL PROGRAM cue.

   a. If decision 1 is selected, proceed to step 6.

   b. If decision 2 is selected, proceed to step 7.

   c. If decision 3, 4, or 5 is selected, refer to NAVAIR 0l-S3AAB-2-3.1 for maintenance loading procedures.

6. Press ENTER.

   a. A full reload is performed.

7. If decision 2 is selected, the following cue appears:

      LOAD SAFE DATA
      1 YES
      2 NO

   a. If decision 1 is selected, the last set of safe data is loaded.

   b. If decision 2 is selected, preflight data are loaded.

8. Press ENTER.

DEACTIVATION:

1. RLOAD PRGM is deactivated when one of the following occurs:

   a. RLOAD PRGM is pressed when amber.

   b. Selection of INVALID in response to SEL VALIDITY cue.

2. Deactivation result:

   a. RLOAD PRGM changes from amber to green.

2.9.1.3 REINIT SYSTEM Option

TACCO
SENSO
COTAC

PRGM CONT

PURPOSE:

Permits the operator to reinitialize the system.

PREREQUISITE:

1. PRGM CONT/PGM CTL matrix is active.

PROCEDURE:

1. Press REINIT SYSTEM (lights amber).

   a. The following cue appears:

      SEL VALIDITY
      1 VALID
      2 INVALID

2. Respond to the SEL VALIDITY cue.

   a. To reinitialize the system, press 1 on the keyset. Proceed to step 3.

   b. To nullify the REINIT SYSTEM, press 2 on the keyset. Proceed to step 4.

3. Press ENTER.

   a. All subsystems not disabled prior to the reinitialzation will be reinitialized.

   b. On-line navigation position is updated from the NCP if the NCP is operating. Lines 3 and 4 of the NAV PREFLIGHT Tableau are updated to the current NCP position. Velocity overrides in the NAV STATUS Tableau will be reactivated.

4. Press ENTER.

   a. The REINIT SYSTEM function is deactivated.

DEACTIVATION:

1. REINIT SYSTEM is deactivated when one of the following occurs:

   a. REINIT SYSTEM is pressed when amber.

   b. Selection of INVALID in response to SEL VALIDITY cue.

2. Deactivation result:

   a. REINIT SYSTEM changes from amber to green.

2.9.1.4 INSERT DATA Option

TACCO
SENSO
COTAC

INSERT DATA

PRGM CONT

PURPOSE:

Allows the operator to recover or continue a mission by inserting data previously extracted (during a time when the system was operating normally). The system selects the latest block of safe data to insert into the program. If invalid, the other set of safe data is inserted.

Note

- In the event it is necessary to recover information inadvertently destroyed through destroy data function, INSERT DATA option may be used.

- The safe data are read from the GMA and inserted into memory.

PREREQUISITE:

1. PRGM CONT/PGM CTL matrix is active.

PROCEDURE:

1. Press INSERT DATA (lights amber).

   a. The following cue appears:

      SEL VALIDITY
      1 VALID
      2 INVALID

2. Respond to the SEL VALIDITY cue.

   a. If decision 1 is selected, the most recent block of safe data stored in the GMA is inserted into memory.

   b. Following the insertion of safe data, a full system reinitialization occurs.

   c. If decision 2 is selected, no safe data are loaded.

   d. Press the desired number on the keyset.

3. Press ENTER.

DEACTIVATION:

1. INSERT DATA is deactivated if pressed when amber.

2. The operator selects INVALID to the SEL VALIDITY cue.

3. Deactivation result:

   a. INSERT DATA changes from amber to green.

2.9.1.5 SECRET LOCK Option

TACCO
SENSO
COTAC

SECRET LOCK

PRGM CONT

PURPOSE:

Allows the operator to enable restricted functions for the duration of the mission.

PREREQUISITE:

1. PRGM CONT/PGM CTL matrix is active.

PROCEDURE:

1. Press SECRET LOCK (lights amber).

   a. The following cue appears:

      ENT CODE
      ----

2. Respond to the ENT CODE cue.

   Note

   Entry range is 0 to 9999.

3. Press ENTER.

   a. Restricted functions are made available.

DEACTIVATION:

1. SECRET LOCK is deactivated when one of the following occurs:

   a. SECRET LOCK is pressed when amber.

   b. Termination of the cueing sequence.

2. Deactivation result:

   a. SECRET LOCK changes from amber to green.

2.9.1.6 SYSTEM STATUS Option

TACCO
SENSO
COTAC

SYSTEM STATUS

PRGM CONT

PURPOSE:

Permits status inspection and modification of each hardware subsystem.

PREREQUISITE:

1. PRGM CONT/PGM CTL matrix is active.

PROCEDURE:

1. Press SYSTEM STATUS (lights amber).

   a. SYSTEM STATUS Tableau is displayed (refer to Chapter 10).

   b. The following cue appears:

      ENT LINE NUM
      XX

      Where XX is the suggested entry (first or next modifiable tableau line).

2. Respond to the ENT LINE NUM cue.

   a. Operator selects the number on the keyset corresponding to the subsystem to be modified.

3. Press ENTER.

   a. The following cue appears:

      SUBSYSTEM OPTIONS
      1 REINIT
      2 DISABLE
      3 CARRY-ON

   b. If the subsystem selected has an EXPANDED SUBSYSTEM STATUS Tableau, that tableau will be displayed along with the SUBSYSTEMS OPTIONS cue.

4. Respond to the cue.

   a. If decision 1 is selected, proceed to step 5.

   b. If decision 2 is selected, proceed to step 6.

   c. If decision 3 is selected, proceed to step 7.

5. Press ENTER.

   a. For systems other than ESM, the selected subsystem is reinitialized.

   b. For ESM, the following cue appears:

      SEL ESM REINIT
      1 REINIT
      2 RELOAD-REINIT

If decision 1 is selected, the ESM system is re-initialized. If decision 2 is selected, the ESM software is reloaded from track 7 of TC and the system initialized to initial conditions.

6. Press ENTER.

   a. The selected subsystem is prevented from operating on-line.

   b. The SYSTEM STATUS Tableau is updated to indicate the subsystem has been disabled.

   c. If the disabled subsystem is SESCOS (line 13 on page 2 of the SYSTEM STATUS Tableau), all option select switches in the SEARCH STORES and SCH STR matrices become unavailable (black). In addition, SUS in the KILL STORES and KIL STR matrices also become unavailable. Any attempt to CARRY-ON with SESCOS causes the SELECTION UNAVAIL alert to be displayed.

   d. If the disabled system is ARMCOS (line 14 on page 2 of SYSTEM STATUS Tableau), all option select switches in the KILL STORES and KIL STR matrices become unavailable (black) and if a weapon FTP has been entered, it is deactivated. Any attempt to CARRY-ON with ARMCOS causes the SELECTION UNAVAIL alert to be displayed.

   e. If the disabled subsystem is FLIR (line 19 on page 2 of the SYSTEM STATUS Tableau), all option select switches in the FLIR and FLR matrices become unavailable (black). In addition, the FLIR display is deactivated if the FLIR is disabled while it is being displayed. Any attempt to CARRY-ON with FLIR causes the SELECTION UNAVAIL alert to be displayed.

   f. If the disabled subsystem is RIU (line 21 on page 2 of the SYSTEM STATUS Tableau), all option select switches in the RADAR DSPL, RADAR CONT, and RDR matrices become unavailable (black). If the radar is radiating at the time the RIU is disabled, the RADIATION ON alert is displayed. Although the radar display is deactivated, the radiation must be turned off at the OLCU. Any attempt to CARRY-ON with RIU causes the SELECTION UNAVAIL alert to be displayed.

   g. If the disabled subsystem is ESM (line 22 on page 2 of the SYSTEM STATUS Tableau), all option select switches in the ESM matrices become unavailable (black). In addition, the ESM display is deactivated if ESM is disabled while it is being displayed. Any attempt to CARRY-ON with ESM causes the SELECTION UNAVAIL alert to be displayed.

   h. Proceed to step 8.

7. Press ENTER.

   a. The selected subsystem is allowed to continue on-line operation as though no defect had been reported.

8. Continue.

DEACTIVATION:

1. SYSTEM STATUS is pressed when amber.

2. Deactivation result:

   a. SYSTEM STATUS changes from amber to green.

2.9.1.7 END MSN Option

TACCO
SENSO
COTAC

PRGM CONT

PURPOSE:

Prepares the data processing system for shutdown.

PREREQUISITE:

1. PRGM CONT/PGM CTL matrix is active.

PROCEDURE:

1. Press END MSN (lights amber).

   a. The following cue appears:

      SEL VALIDITY
      1 VALID
      2 INVALID

This cue allows the operator to (1) confirm the end mission selection or (2) correct an accidental switch activation.

Note

END MSN is required for proper data extraction/mission replay.

2. Respond to the cue.

   a. To confirm the END MSN command, press 1 on the keyset. Proceed to step 3.

   b. To invalidate the END MSN function, press 2 on the keyset. Proceed to step 4.

3. Press ENTER.

   a. The following alert appears at all stations:

      ZZZZ END OF MSN

   b. Prepares the DPS for shutdown:

      (1) Operational program stops processing inputs.

      (2) DMTU repositions heads to BOT.

      (3) GPDC memory is cleared.

      (4) All displays go blank.

4. Press ENTER.

   a. The END MSN function is deactivated.

DEACTIVATION:

1. END MSN is deactivated when one of the following occurs:

   a. INVALID is selected in response to SEL VALIDITY cue.

   b. END MSN is pressed when amber.

2. Deactivation results:

   a. END MSN changes from amber to green.

   b. Cues and alerts associated with END MSN are removed.

2.9.2 REDSPL Matrix

TACCO
SENSO
COTAC

REDSPL

PURPOSE:

Displays option select function legends associated with REDSPL.

PREREQUISITE:

None.

PROCEDURE:

1. Press REDSPL (lights amber).

Note

- Redisplay legend on COTAC INCOS is REDSP.
- REDSP at COTAC station does not light amber when pressed. Legend goes black and matrix C DSTRY DATA legend appears.

Note

LOFAR CNTCT, DIFAR CNTCT, ACTIVE CNTCT, and SONB are blacklit and no longer available.

   a. REDSPL option select function legends are displayed in the upper half of the TACCO matrix A select switches.

   b. REDSP option select function legends at COTAC station are displayed in the lower half of matrix B option select switches.

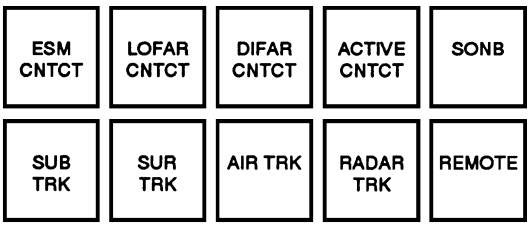

DEACTIVATION:

1. REDSPL matrix is deactivated when another matrix select switch is pressed that requires replacing of the option select legends.

2. Deactivation results:

   a. REDSPL option select function legends are replaced by option select function legends associated with another matrix select.

   b. REDSPL matrix switch legend changes from amber to green.

Note

- Pressing any of the REDSPL function switches, when green, causes the respective switch to change from green to amber, and the previously cleared contact, symbol, track, or fix associated with the activated function is redisplayed on the MPD.

- Pressing any of the REDSPL function switches, when amber, causes the respective function to deactivate, and the switch changes from amber to green. All redisplayed contacts, symbols, tracks, or fixes displayed are removed from the MPD.

- Any local or remote contact, symbol, track, or fix may be retained, if desired, by the RETAIN SYMBOL function.

2.9.2.1 ESM CNTCT Option

TACCO
SENSO
COTAC

REDSPL

PURPOSE:

Redisplays all ESM contacts previously cleared from the TAC PLOT.

PREREQUISITE:

1. REDSPL matrix is active.

PROCEDURE:

1. Press ESM CNTCT (lights amber).

   a. All previously cleared ESM contacts are redisplayed.

DEACTIVATION:

1. ESM CNTCT is deactivated if pressed when amber.

2. Deactivation results:

   a. All redisplayed ESM contacts are removed, except symbols selected for retention by the RETAIN SYMBOL function.

   b. ESM CNTCT changes from amber to green.

2.9.2.2 RADAR TRK Option

TACCO
SENSO
COTAC

REDSPL

PURPOSE:

Redisplays all radar subsystem track symbols on the TAC PLOT.

PREREQUISITE:

1. REDSPL matrix is active.

PROCEDURE:

1. Press RADAR TRK (lights amber).

2. Deactivate CLEAR TAC PLOT if RADAR TRK was active at the time of CLEAR TAC PLOT activation.

   a. The following cue appears:

   SEL CATEGORY
   1 FRIENDLY
   2 UNKNOWN
   3 HOSTILE
   4 ALL

   b. Respond to the cue to display the desired category of radar subsystem tracks.

   c. Further selections cause radar subsystem tracks of the selected types to be displayed in addition to those previously displayed.

Note

The SEL CATEGORY cue appears when the requesting operator is in radar PPI or radar PPI/B-scan display mode. When in TAC PLOT display mode, the cue is not presented and ALL is automatically selected for display.

DEACTIVATION:

1. RADAR TRK is deactivated if pressed when amber.

2. Deactivation results:

   a. All redisplayed radar tracks are removed, except symbols selected for retention by the RETAIN SYMBOL function.

   b. RADAR TRK changes from amber to green.

2.9.2.3 SUB TRK Option

TACCO
SENSO
COTAC

REDSPL

PURPOSE:

Redisplays all subsurface and unknown tracks on the TAC PLOT.

Redisplays all subsurface and unknown fixes not associated with cleared tracks on the TAC PLOT.

PREREQUISITE:

1. REDSPL matrix is active.

PROCEDURE:

1. Press SUB TRK (lights amber).

   a. All subsurface and unknown tracks are redisplayed.

   b. All subsurface and unknown fixes not associated with cleared tracks are redisplayed.

DEACTIVATION:

1. SUB TRK is deactivated if pressed when amber.

2. Deactivation results:

   a. All redisplayed subsurface and unknown tracks and fixes are removed, except symbols selected for retention by the RETAIN SYMBOL function.

   b. SUB TRK changes from amber to green.

2.9.2.4 SUR TRK Option

TACCO
SENSO
COTAC

REDSPL

PURPOSE:

Redisplays all surface tracks on the TAC PLOT.

Redisplays all surface fixes not associated with tracks previously cleared from the TAC PLOT.

PREREQUISITE:

1. REDSPL matrix is active.

PROCEDURE:

1. Press SUR TRK (lights amber).

   a. All surface tracks are redisplayed.

   b. All surface fixes not associated with previously cleared tracks are redisplayed, including PDIP surface fixes.

DEACTIVATION:

1. SUR TRK is deactivated if pressed when amber.
2. Deactivation results:
   a. All redisplayed surface tracks and fixes are removed, except symbols selected for retention by the RETAIN SYMBOL function.
   b. SUR TRK changes from amber to green.

2.9.2.5 AIR TRK Option

TACCO
SENSO
COTAC

REDSPL

PURPOSE:

Redisplays all airborne tracks on the TAC PLOT.

Redisplays all airborne fixes not associated with tracks previously cleared from the TAC PLOT.

PREREQUISITE:

1. REDSPL matrix is active.

PROCEDURE:

1. Press AIR TRK (lights amber).
   a. All airborne tracks are redisplayed.
   b. All airborne fixes not associated with cleared tracks are redisplayed.

DEACTIVATION:

1. AIR TRK is deactivated if pressed when amber.
2. Deactivation results:
   a. All redisplayed airborne tracks and fixes are removed, except symbols selected for retention by the RETAIN SYMBOL function.
   b. AIR TRK changes from amber to green.

2.9.2.6 REMOTE Option

TACCO
SENSO
COTAC

REDSPL

PURPOSE:

Redisplays all remote data-link contacts previously cleared from the TAC PLOT.

PREREQUISITE:

1. REDSPL matrix is active.

PROCEDURE:

1. Press REMOTE (lights amber).
   a. The following cue appears:

      SEL REMOTE TYPE
      1 TRACKS
      2 SONBS
      3 SPCL POINTS
      4 CONTIN PREDS
      5 DATUMS
      OPTNL

2. Respond to the cue.
   a. If the operator chooses to skip the cue, press SKIP CUE or TERM CUE SEQ. Function deactivates.
   b. If the operator chooses to display nondisplayed symbols, press the desired number (1 through 5) on keyset, then proceed to step 3.
3. Press ENTER.
   a. Nondisplayed remote symbols of the type selected in the SEL REMOTE TYPE cue are displayed until all such symbols of the type selected are displayed or until display capacity is reached.
   b. The SEL REMOTE TYPE cue is redisplayed.
   c. Repeat steps 2 and 3 until all desired symbols are displayed.

DEACTIVATION:

1. REMOTE is deactivated if pressed when amber, or if SKIP CUE or TERM CUE SEQ is pressed.

2. Deactivation results:

   a. All redisplayed remote data-link contacts are removed, except symbols selected for retention by the RETAIN SYMBOL function.

   b. REMOTE changes from amber to green.

2.9.3 SEARCH MODE Matrix

TACCO
SENSO
COTAC

SEARCH
MODE

PURPOSE:

Displays option select function legends associated with the SEARCH MODE matrix.

PREREQUISITE:

None.

PROCEDURE:

1. Press SEARCH MODE (lights amber).

Note

- SEARCH MODE legend on COTAC INCOS is SCH.

- SCH at COTAC station does not light amber when pressed. Legend goes black and matrix C VECTOR legend appears.

   a. SEARCH MODE option select function legends are displayed in the upper half of the TACCO matrix A option select switches.

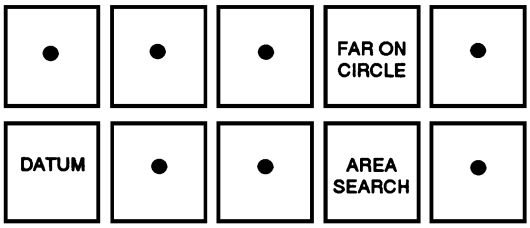

   b. SCH option select function legends at COTAC station are displayed in the lower half of matrix B option select switches.

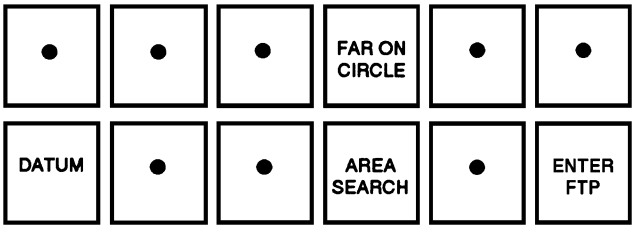

Note

COTAC ENTER FTP option is the same as the ENTER FTP function discussed under TACCO/SENSO display control functions.

DEACTIVATION:

1. SEARCH MODE/SCH is deactivated when another matrix select switch is pressed that requires replacing of the option select legends.

2. Deactivation results:

   a. SEARCH MODE/SCH option select function legends are replaced by option select function legends associated with another matrix select.

   b. SEARCH MODE matrix switch legend changes from amber to green.

2.9.3.1 FAR ON CIRCLE Option

TACCO
SENSO
COTAC

SEARCH
MODE

PURPOSE:

Displays a circle about a hooked point having a radius equal to the maximum distance the target could have traveled by the time the aircraft reaches the hooked point.

PREREQUISITE:

1. SEARCH MODE/SCH matrix is active.
2. TAC PLOT display is active.
3. A hooked position.

PROCEDURE:

1. Press FAR ON CIRCLE (lights amber).
   a. If the hooked position does not have an associated time, the following cue appears:

      ENT TIME-ZULU
      XXXX

Note

The suggested entry is the time FAR ON CIRCLE was pressed.

   b. If the hooked position has an associated time, proceed to step 3a.

2. Respond to the ENT TIME-ZULU cue.
   a. Enter the time the target was at the hooked position.

The entered time cannot be earlier than the restart time.

3. Press ENTER.
   a. The following cue appears:

      ENT SPEED-KTS
      --

4. Respond to the ENT SPEED-KTS cue.
   a. Enter the speed of the target.
5. Press ENTER.
   a. A circle is displayed, the radius of which indicates the maximum distance the target could travel by the time the aircraft reaches the hooked point.

Note

If the aircraft deviates from the initial calculated speed or heading en route to the hooked point, the FAR ON CIRCLE switch should be reselected.

DEACTIVATION:

1. FAR ON CIRCLE is deactivated when one of the following occurs:
   a. FAR ON CIRCLE is pressed when amber.
2. Deactivation results:
   a. Displayed circle is removed.
   b. FAR ON CIRCLE changes from amber to green.

2.9.4 DATUM Option

TACCO
SENSO
COTAC

SEARCH
MODE

PURPOSE:

Allows the operator to enter a datum with selected parameters into the system at a hooked point.

Note

- Only subsurface datums can be assigned for transmission on the Link 11 net through the ASSEM REPORT function.
- No AMPLIFY Tableau is available when AMPLFY option is used on a datum. Only the designation time is available as AMPLFY data, displayed beneath the local track number.

PREREQUISITES:

1. SEARCH MODE matrix is active.
2. HOOK VERIFY a point on the TAC PLOT.

PROCEDURE:

1. Press DATUM (lights amber).

   a. The next unused local track number is assigned the datum.

   b. The following cue appears:

   SEL CAT-ID
   1 AIR F 6 SUB H
   2 SURF F 7 AIR U
   3 SUB F 8 SURF U
   4 AIR H 9 SUB U
   5 SURF H

2. Respond to the SEL CAT-ID cue (local).

   a. If cue decision 1, 4, 5, or 7 is selected, proceed to step 15.

   b. If decision 2 is selected, proceed to step 13.

   c. If cue decision 3, 6, or 9 is selected, proceed to step 3.

   d. If decision 8 is selected, proceed to step 11.

3. Press ENTER.

   a. The following cue appears:

   SURFACED SUB
   1 YES
   2 NO

4. Respond to the SURFACED SUB cue.

   a. If decision 1 is selected, proceed to step 5.

   b. If decision 2 is selected, proceed to step 6.

   c. A skip cue or term cue sequence response will assume no to the cue.

5. Press ENTER.

   a. The following cue appears:

   SEL SUBSURF CLASS
   1 NO STATEMENT
   2 POSSIBLE SUB
   3 PROBABLE SUB
   4 CERTAIN SUB
   5 NON SUB
   OPTNL

6. Respond to the SEL SUBSURF CLASS cue.

   a. If cue decision 1 or 5 is selected, proceed to step 15.

   b. If decision 2 is selected, proceed to step 7.

   c. If cue decision 3 or 4 is selected, proceed to step 9.

7. Press ENTER.

   a. The following cue appears:

   ENT CONF LEVEL
   1-4

8. Respond to the ENT CONF LEVEL cue.

9. Press ENTER.

   a. The following cue appears:

   SEL CLASS AMP
   1 PROPULSION UNK
   2 PROPULSION CON
   3 PROPULSION NUC
   OPTNL

10. Respond to the SEL CLASS AMP cue.

    a. Proceed to step 15.

11. Press ENTER.

    a. The following cue appears:

    SEL PRI ID AMP
    1 EVALUATED UNK
    2 ASSUMED FRIEND
    3 ASSUMED HOST

12. Respond to the SEL PRI ID AMP cue.

    a. Press 1, 2, or 3 on the keyset.

13. Press ENTER.

    a. The following cue appears:

    SEL PRI ID AMP
    1 CONFIRMED FRIEND
    2 AUXILIARY
    3 SPECIAL MISSION
    4 AMPHIBIOUS
    5 LINE

14. Respond to the SEL PRI ID AMP cue.

    a. Press 1, 2, 3, 4, or 5 on the keyset.

15. Press ENTER.

    a. The parameters of the hooked track fixes or datum are modified.

    b. Function deactivates.

Note

When a SKIP CUE option is available and selected for the SEL CAT-ID and related cues, the parameter previously assigned to the track remains unchanged.

DEACTIVATION:

1. DATUM is deactivated when one of the following occurs:

    a. DATUM is pressed when amber.

    b. A datum is entered into the system at the hooked point.

    c. Changing from a tactical to a nontactical display mode when a cue is displayed.

2. Deactivation result:

    a. DATUM changes from amber to green.

2.9.4.1 AREA SEARCH Option

TACCO
SENSO
COTAC

SEARCH MODE

PURPOSE:

Provides capability to utilize the radar update tracks function to search the area about a designated point or contact bearing line.

PREREQUISITES:

1. SEARCH MODE/SCH matrix is active.
2. Radar operating with surface search mode active. Range scale is greater than 16 nm.
3. Hook a valid designated point or contact bearing line.
4. Display mode must be TAC PLOT.

PROCEDURE:

1. If a bearing line was hooked:

    a. Press AREA SEARCH (lights amber).

    b. The following alert is displayed:

    AREA SEARCH COMPLETE

    c. An area search symbol is displayed corresponding to radar contact locations.

    d. A maximum of eight area search symbols can be displayed.

    e. Data will remain on TAC PLOT for 60 seconds.

2. If a geographic position was hooked:

    a. Press AREA SEARCH (lights amber).

    (1) The following cue appears:

    ENT RADIUS-NM

Entry range 0 through 13.

    b. Respond to the ENT RADIUS — NM cue.

    (1) Press numerics on the keyset to select the desired RADIUS — NM.

    c. Press ENTER.

    (1) The following alert is displayed:

    AREA SEARCH COMPLETE

    (2) An area search symbol is displayed corresponding to radar contact locations.

    (3) A maximum of eight area search symbols can be displayed.

    (4) Data will remain on TAC PLOT for 60 seconds.

DEACTIVATION:

1. AREA SEARCH is deactivated when one of the following occurs:

   a. AREA SEARCH is pressed when amber.

   b. Deactivation of radar surface search display mode or continuous scan subfunction at the radar controlling operator's station.

   c. If the following alert is displayed:

      AREA SEARCH UNAVAILABLE

      (1) An AREA SEARCH UNAVAILABLE alert is displayed when the selected radius is outside the selected radar range scale.

   d. Activation of another function requiring the cueing area.

2. Deactivation results:

   a. Cues associated with AREA SEARCH are removed.

   b. AREA SEARCH changes from amber to green.

2.9.5 TAC AIDS Matrix

TACCO
SENSO
COTAC

TAC AIDS

PURPOSE:

Displays option select function legends associated with the TAC AIDS mode.

PREREQUISITE:

None.

PROCEDURE:

1. Press TAC AIDS (lights amber).

Note

TAC AIDS at the COTAC station does not light amber when pressed. The legend goes black and the matrix C CLR TAC PLOT legend appears.

   a. TAC AIDS option select function legends are displayed in the upper half of the TACCO matrix B option select switches.

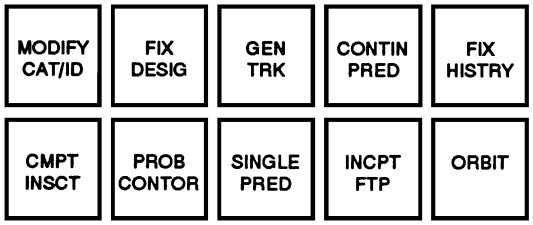

   b. TAC AIDS option select function legends at COTAC station are displayed in the lower half of matrix B option select switches.

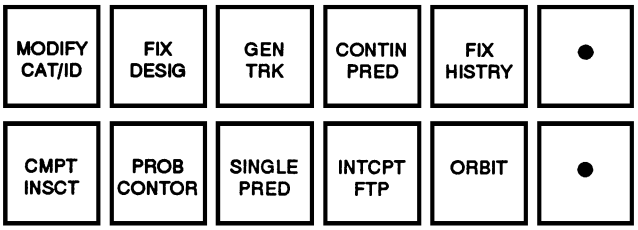

DEACTIVATION:

1. TAC AIDS matrix is deactivated when another matrix select switch is pressed that requires replacing of the option select legends.

2. Deactivation results:

   a. TAC AIDS option select function legends are replaced by option select function legends associated with another matrix select.

   b. TAC AIDS matrix switch legend changes from amber to green.

2.9.5.1 MODIFY CAT/ID (Modify Category/ID) Option

TACCO
SENSO
COTAC

TAC AIDS

PURPOSE:

Allows modification of the local track number, category, identity, subsurface class, class amplification, and/or primary identification for any local track fix, or fix history. MODIFY CAT/ID also allows the operator to modify (update) remote tracks (air or surface) regarding category, identity, and primary identity amplification.

PREREQUISITES:

1. TAC AIDS matrix is active.
2. HOOK VERIFY a lost contact, local fix or track, or fix history, or remote air, or surface track.

PROCEDURE:

1. Press MODIFY/CAT/ID (lights amber).

   a. If the operator has hooked a lost contact or a local subsurface track, the following cue appears:

   LOST CONTACT
   1 YES
   2 NO

   (1) Proceed to step 3.

   b. If the operator has hooked a local subsurface fix, local surface or track, local air fix or track, the following cue appears:

   ENT LOCAL TN
   XXXX

   (1) Proceed to step 2.

   c. If the operator has hooked a fix history associated with GEN TRACK, the following cue appears:

   ENT LOCAL TN
   XXXX

   (1) Proceed to step 2.

   d. If the operator has hooked a remote air or surface track, the following cue appears:

   SEL CAT-ID
   1 SURF FRIEND
   2 SURF HOSTILE
   3 SURF UNKNOWN
   OPTNL

   (1) Proceed to step 7.

2. Respond to the ENT LOCAL TN cue.

   a. If a TN is entered that is associated with another track, proceed to step 21.

Note

Upon entry of a TN associated with another track, the FIX HISTORY is removed from the display. The new track will be modified to include the fix, and the function is terminated. The updated GEN TRACK course and speed data will reflect the modification.

3. Respond to the LOST CONTACT cue.

   a. If cue decision 1 (YES) is selected, the hooked contact is modified to a lost contact. Proceed to step 20.

   b. If cue decision 2 (NO) is selected, the ENT LOCAL TN cue appears upon completion of step 4.

   c. Press 1 or 2 on the keyset.

4. Press ENTER.

5. Respond to the ENTER LOCAL TN cue.

   a. If suggested entry is accepted, proceed to step 6.

   b. If suggested entry is not accepted, press the desired numbers on the keyset.

6. Press ENTER.

   a. The following cue appears:

```
   SEL CAT-ID
1  AIR    F    6  SUB    H
2  SURF   F    7  AIR    U
3  SUB    F    8  SURF   U
4  AIR    H    9  SUB    U
5  SURF   H       OPTNL
```

      (1) Proceed to step 7.

7. Respond to the SEL CAT-ID cue (remote tracks).

   a. If cue decision 1, 2, 3, 4, 5, 6, 7, or 9 is selected, proceed to step 21.

   b. If decision 8 is selected, proceed to step 17.

Note

An operator response of SKIP CUE causes the function to perform one of the following responses:

1. Omit remaining cueing sequence if the hooked symbol was an air track or a hostile surface track.
2. Display the SEL PRI ID AMP cue for friendly contacts (step 19a if the hooked symbol is a friendly surface track.
3. Display the SEL PRI ID AMP cue for unknown contacts (step 17a) if the hooked symbol is an unknown surface track.

8. Respond to the SEL CAT-ID cue (local).

   a. If cue decision 1, 4, 5, or 7 is selected, proceed to step 21.

   b. If decision 2 is selected, proceed to step 10.

   c. If cue decision 3, 6, or 9 is selected, proceed to step 9.

   d. If decision 8 is selected, proceed to step 17.

Note

An operator response of SKIP CUE causes the function to perform one of the following responses:

1. Omit remaining cueing sequence if the hooked symbol was an air track or a hostile surface track or fix.
2. Display the SEL PRI ID AMP cue for friendly contacts (step 19a) if the hooked symbol is a friendly surface track or fix.
3. Display the SEL PRI ID AMP cue for unknown contacts (step 17a) if the hooked symbol is an unknown surface track or fix.
4. Display the SEL SUBSURF CLASS cue for subsurface contacts (step 11a) if the hooked symbol is a subsurface track or fix.

9. Press ENTER.

   a. The following cue appears:

```
SURFACED SUB
1 YES
2 NO
```

10. Respond to the SURFACED SUB cue.

   a. If decision 1 is selected, proceed to step 15.

   b. If decision 2 is selected, proceed to step 11.

   c. A skip cue or term cue response will assume NO to the cue.

11. Press ENTER.

   a. The following cue appears:

```
SEL SUBSURF CLASS
1 NO STATEMENT
2 POSSIBLE SUB
3 PROBABLE SUB
4 CERTAIN SUB
5 NON SUB
                OPTNL
```

12. Respond to the SEL SUBSURF CLASS cue.

    a. If cue decision 1 or 5 is selected, proceed to step 21.

    b. If decision 2 is selected, proceed to step 13.

    c. If cue decision 3 or 4 is selected, proceed to step 15.

13. Press ENTER.

    a. The following cue appears:

    ENT CONF LEVEL 1-4

14. Respond to the ENT CONF LEVEL cue.

15. Press ENTER.

    a. The following cue appears:

    SEL CLASS AMP
    1 PROPULSION UNK
    2 PROPULSION CON
    3 PROPULSION NUC
    OPTNL

16. Respond to the SEL CLASS AMP cue.

    a. Proceed to step 21.

17. Press ENTER.

    a. The following cue appears:

    SEL PRI ID AMP
    1 EVALUATED UNK
    2 ASSUMED FRIEND
    3 ASSUMED HOST

18. Respond to the SEL PRI ID AMP cue.

    a. Press 1, 2, or 3 on the keyset. Proceed to step 21.

19. Press ENTER.

    a. The following cue appears:

    SEL PRI ID AMP
    1 CONFIRMED FRIEND
    2 AUXILIARY
    3 SPECIAL MISSION
    4 AMPHIBIOUS
    5 LINE
    OPTNL

20. Respond to the SEL PRI ID CAMP cue.

    a. Press 1, 2, 3, 4, or 5 on the keyset.

21. Press ENTER.

    a. The parameters of the hooked track fixes or datum are modified.

    b. Function deactivates.

Note

When a SKIP CUE option is available and selected for the SEL CAT ID, the parameter previously assigned to the track remains unchanged.

DEACTIVATION:

1. The MODIFY CAT/ID function is deactivated when one of the following occurs:

    a. Cueing sequence is complete.

    b. MODIFY CAT/ID is pressed when amber.

2. Deactivation results:

    a. Cues associated with MODIFY CAT/ID function are removed.

    b. MODIFY CAT/ID changes from amber to green.

2.9.5.2 FIX DESIG Option

TACCO
SENSO
COTAC

TAC AIDS

PURPOSE:

Allows the operator to designate any hooked position as a fix and assign a track number, category, and identification to the fix.

PREREQUISITES:

1. TAC AIDS matrix is active.
2. A fix position has been designated.

PROCEDURE:

1. Press FIX DESIG (lights amber).

   a. The following cue appears:

   ENT LOCAL TN
   XXXX

2. Respond to the ENT LOCAL TN cue.

   a. If the suggested entry is selected, proceed to step 3.

   b. If a track number is to be entered other than the suggested entry, press numerics on the keyset.

3. Press ENTER.

   a. If the entered track number was not previously assigned, the following cue appears:

   SEL CAT-ID

1	AIR	F	6	SUB	H
2	SURF	F	7	AIR	U
3	SUB	F	8	SURF	U
4	AIR	H	9	SUB	U
5	SURF	H			

   b. If the entered track number was previously assigned, the SEL CAT-ID cue does not appear. The fix is automatically assigned the same CAT-ID as the existing item with that track number. Proceed to step 17b.

4. Respond to the SEL CAT-ID cue.

   a. Press a numeric on the keyset to classify the target-method of travel and identification.

   b. If cue decision 1, 4, 5, or 7 is selected, proceed to step 17.

   c. If cue decision 2 (SURF F) is selected, proceed to step 15.

   d. If cue decision 3, 6, or 9 is selected, proceed to step 5.

   e. If decision 8 is selected, proceed to step 13.

5. Press ENTER.

   a. The following cue appears:

   SURFACED SUB
   1 YES
   2 NO

6. Respond to the SURFACED SUB cue.

   a. If decision 1 is selected, proceed to step 11.

   b. If decision 2 is selected, proceed to step 7.

   c. A skip cue or term cue sequence response will assume NO to the cue.

7. Press ENTER.

   a. The following cue appears:

   SEL SUBSURF CLASS
   1 NO STATEMENT
   2 POSSIBLE SUB
   3 PROBABLE SUB
   4 CERTAIN SUB
   5 NON SUB

8. Respond to the SEL SUBSURF CLASS cue.

   a. If cue decision 1 or 5 is selected, proceed to step 17.

   b. If decision 2 is selected, proceed to step 9.

   c. If cue decision 3 or 4 is selected, proceed to step 11.

9. Press ENTER.

   a. The following cue appears:

   ENT CONF LEVEL 1-4

10. Respond to the ENT CONF LEVEL cue.

11. Press ENTER.

a. The following cue appears:

SEL CLASS AMP
1 PROPULSION UNK
2 PROPULSION CON
3 PROPULSION NUC

12. Respond to the SEL CLASS AMP cue.

a. Press 1, 2, or 3 on the keyset. Proceed to step 17.

13. Press ENTER.

a. The following cue appears:

SEL PRI ID AMP
1 EVALUATED UNK
2 ASSUMED FRIEND
3 ASSUMED HOST

14. Respond to SEL PRI ID AMP cue.

a. Press 1, 2, or 3 on the keyset. Proceed to step 17.

15. Press ENTER.

a. The following cue appears:

SEL PRI ID AMP
1 CONFIRMED FRIEND
2 AUXILIARY
3 SPECIAL MISSION
4 AMPHIBIOUS
5 LINE
OPTNL

16. Respond to SEL PRI ID AMP cue.

a. Press the desired number on the keyset.

17. Press ENTER.

a. The new primary identity amplification is recorded.

b. The following cue appears:

ENT TIME-ZULU

Note

The entered time can be up to ±9 hours from the computer restart time. Should an earlier time be entered, a negative DR will be computed.

18. Respond to the ENT TIME-ZULU cue.

a. If suggested entry is accepted, proceed to step 19.

b. If suggested entry is not accepted, press the desired numbers on the keyset.

19. Press ENTER.

a. The following cue appears:

SEL FIX CNFDNC
1 GOOD
2 POOR

20. Respond to the SEL FIX CNFDNC cue.

a. Press 1 or 2 on the keyset. Proceed to step 21.

21. Press ENTER.

a. The following cue appears:

ENT UNCERTNY-YDS
XXXXX

Note

- XXXXX represents entry range of 200 through 64,000 yards.
- Suggested entry is 500 yards.
- The 1-sigma uncertainty values used by the program for fixes generated by various sensors, available in the Tactical Manual, NAVAIR 01-S3AAB-1T, should be considered when assigning an uncertainty value to a FIX DESIG.

b. If suggested entry is accepted, proceed to step 22.

c. If suggested entry is not accepted, press the desired numbers on the keyset.

22. Press ENTER.

a. The appropriate fix symbology is displayed at the designated position.

DEACTIVATION:

1. FIX DESIG is deactivated when one of the following occurs:

   a. FIX DESIG is pressed when amber.

   b. Activation of another function when a cue is displayed.

   c. Changing from a tactical to a nontactical display mode, if active while a cue is displayed.

2. Deactivation results:

   a. Cues associated with FIX DESIG function are removed.

   b. FIX DESIG changes from amber to green.

2.9.5.3 GEN TRK Option

TACCO
SENSO
COTAC

TAC AIDS

PURPOSE:

Correlates two or more allowable fixes with the same track number into a single updating DR contact with an associated track. Generates a DR track for a single fix with operator entered course and speed.

Note

- The generated track may have an erroneous position, course, or velocity if the times of the fixes from which a track is generated are closer than 30 seconds apart or are entered before performing MARK TIME. These errors may also occur if the X and Y velocity components of a generated track exceed 512 knots.

- A maneuvering contact will require the operator to constantly modify past contact fixes to ensure an accurate GEN TRK.

- For highly evasive contacts use of CONTIN PRED vice GEN TRK is recommended.

PREREQUISITES:

1. TAC AIDS matrix is active.

2. A fix symbol is hooked.

PROCEDURE:

1. Press GEN TRK (lights amber).

   a. A track is generated and displayed from all available fixes having the same track number as the hooked fix.

   b. All fixes with the same track number are cleared from the MPD.

   c. GEN TRK changes from amber to green.

DEACTIVATION:

1. GEN TRK is deactivated if pressed when amber.

2. Deactivation result:

   a. GEN TRK changes from amber to green.

2.9.5.3.1 GEN TRK Option (Single Fix)

1. TAC AIDS matrix is active.

2. A fix symbol is hooked.

PROCEDURE:

1. Press GEN TRK.

   a. The following alert appears:

      ENT COURSE-DEG
      ---

2. Press ENTER.

   a. The following alert appears:

      SEL COURSE CONFDNC
      1 GOOD
      2 POOR

3. Press ENTER.

   a. The following alert appears:

   ENT SPEED-KTS
   --

4. Press ENTER.

   a. The following cue appears:

   SEL SPEED CNFDNC
   1 GOOD
   2 POOR

5. Press ENTER.

   a. A track is generated.

DEACTIVATION:

1. GEN TRK is deactivated if pressed when amber.

2. Deactivation result:

   a. GEN TRK changes from amber to green.

2.9.5.4 CONTIN PRED Option

TACCO
SENSO
COTAC

TAC AIDS

PURPOSE:

Generates and displays the predicted current position of a fix.

PREREQUISITES:

1. TAC AIDS matrix is active.

2. A fix, fix history, or nonreal-time remote track symbol is hooked.

PROCEDURE:

1. Press CONTIN PRED (lights amber).

   a. If the hooked symbol is a nonreal-time remote track, and does not have a zero velocity, a CPP symbol, based upon the remote track location and time, is displayed on the operator's MPD.

Note

A remote track CPP symbol is identified with the letters PK.

   b. If the hooked symbol is a local fix or fix history, the following cue appears:

   SEL NUM OF FIXES
   1 1
   2 2

2. Respond to the cue.

   a. If decision 1 is selected, proceed to step 3.

   b. If decision 2 is selected, proceed to step 9.

3. Press number 1 on the keyset.

4. Press ENTER.

   a. The following cue appears:

   ENT COURSE-DEG
   ---

5. Respond to the cue.

   a. Press numbers on the keyset to enter an estimated target course in degrees (0 to 359).

6. Press ENTER.

   a. The following cue appears:

   ENT SPEED-KTS
   --

7. Respond to the cue.

   a. Enter an estimated target speed on the keyset (0 to 99).

8. Press ENTER.

   a. The CPP symbol is displayed at the current predicted position of the fix on the MPD.

Note

The CPP symbol is displayed only on the selecting operator's MPD.

b. Track number and estimated speed is displayed with the symbol as amplifying information.

c. The position of the symbol and its amplifying information is updated every 5 seconds.

d. CONTIN PRED remains amber.

9. Press number 2 on the keyset.

10. Press ENTER.

a. The following cue appears:

HOOK SECOND SYMBOL

11. Respond to the cue.

a. Position hook over the second fix.

12. Press HOOK VERIFY.

a. The CPP symbol is displayed at the current predicted position of the fix on the operator's MPD.

b. Track number (of the latest fix, if two fixes were hooked) and estimated speed is displayed with the symbol as amplifying information.

c. The position of the symbol and its amplifying information is updated every 5 seconds.

d. CONTIN PRED remains amber.

DEACTIVATION:

1. CONT PRED is deactivated if pressed when amber.

2. Deactivation results:

a. The symbol associated with CONTIN PRED function is removed.

b. CONTIN PRED changes from amber to green.

2.9.5.5 FIX HISTRY Option

TACCO
SENSO
COTAC

TAC AIDS

PURPOSE:

Redisplays fix history symbols associated with a track number.

PREREQUISITES:

1. TAC AIDS matrix is active.

2. A track symbol is hooked.

PROCEDURE:

1. Press FIX HISTRY (lights amber).

a. If no alert appears:

(1) Fix history symbols of all fixes associated with the hooked track are displayed.

Note

Fix history symbols differ from standard fix symbols in that fix history symbols do not have a track number displayed with them.

DEACTIVATION:

1. FIX HISTRY is deactivated if pressed when amber.

2. Deactivation results:

a. Fix history symbols are erased.

b. FIX HISTRY changes from amber to green.

2.9.5.6 CMPT INTSCT Option

TACCO
SENSO
COTAC

TAC AIDS

PURPOSE:

Generates and displays a fix, using the computed intersection of conics generated by two contacts from the same target.

PREREQUISITES:

1. TAC AIDS matrix is active.
2. Two contacts from the following pairs of sensors:
   a. ESM/ESM (different sources)
   b. Remote bearing/remote bearing
   c. ESM/remote bearing
   d. ESM triangulation (two bearings from the same source at two different times).

Note

- The initial ESM bearing is displayed by hooking the ESM contact, activating CMPT INTSCT, and hooking the contact again in response to the HOOK SECOND CONIC cue. The function then computes the intersection of the ESM contact and the initial ESM bearing.
- The initial ESM bearing is defined as the bearing at the time of the last computed intersection, if available. Otherwise, it is the bearing of the original emitter bearing detected by ESM.

3. An allowable local or remote conic symbol generated by ESM is hooked.

Note

The bearing/bearing compute intersection algorithm may result in invalid mirror image fixing.

PROCEDURE:

1. Press CMPT INTSCT (lights amber).
   a. The following cue appears:

      HOOK SECOND CONIC

2. Respond to the HOOK SECOND CONIC cue.
   a. Place the hook on the second allowable conic symbol.
3. Press HOOK VERIFY.
4. Press ENTER.
   a. The intersection is computed, a fix reference mark is displayed and the ENT LOCAL TN cue appears. Proceed to step 6.
   b. If no alert appears, a reference mark is displayed at each intersection point of the hooked pair of contacts. A number 1 appears inside of one reference mark and a number 2 appears in the other reference mark (if a second intersection exists).

Note

When the two conics intersect at only one point, a reference mark without a number appears at that point only.

   c. If the following alert appears:

      FIX UNRELIABLE

      (1) The contact hooked in response to the HOOK SECOND CONIC cue differs more than 10 minutes from the initial hooked contact.

Note

- If the earlier contact has no bearing rate of change or no range rate of change, the time of intersection is the average of the two contact times.
- If the earlier contact has a bearing or range rate of change, its contact time is compensated for time-late error with the values associated with the contact that are in memory. In this case, the time of intersection is established as the most current of the two contacts used.

      (2) The normal cueing sequence continues unaffected.

Note

The only procedure to update an ESM baseline bearing if the FIX UNRELIABLE alert is displayed is to complete the cueing sequence, then destroy the fix if it is inaccurate.

   d. The following alert appears:

      NO INTERSECTION

(1) If two range circle contacts are displayed, the circles do not intersect or the sensors generating the contacts are less than 200 yards apart.

(2) If two bearing line contacts are displayed, the two lines fail to intersect, or the angle of intersection is less than 15°, or the point of intersection is more than 200 nm from any one of the sensors generating the bearing line.

(3) The NO INTERSECTION alert causes the function to deactivate.

5. If two reference marks are displayed, the following cue appears:

SEL AMBIG INTSCTN
1 REF 1 AMBIG
2 REF 2 AMBIG
OPTNL

a. The reference mark selected will be destroyed from the display leaving only one fix.

(1) Press 1 or 2 on the keyset and press ENTER.

b. If the ambiguity cannot be resolved, press SKIP CUE or TERM CUE SEQ.

c. The following cue appears:

ENT LOCAL TN
XXXX

Note

Xs represent the suggested entry.

(1) The purpose of the ENT LOCAL TN cue is to apply a track number to the fix located at the undestroyed reference mark, or if two reference marks still remain, at the fix located at reference mark 1.

6. Respond to the ENT LOCAL TN cue.

a. If the suggested entry is selected, proceed to step 7.

b. If a track number other than the suggested entry is to be entered, press numerics on the keyset.

7. Press ENTER.

a. If only one reference mark is being processed, proceed to step 8.

b. The following cue appears only if two reference marks are being processed:

ENT LOCAL TN
XXXX

c. The purpose of the second appearance of the ENT LOCAL TN cue is to apply a track number at the fix located at reference mark 2.

8. Respond to the second ENT LOCAL TN cue if it appears.

a. The track number entered must differ from the track number previously entered for the first fix.

9. Press ENTER.

a. In all cases where a previously assigned track number is selected, vice the suggested entry, the category and identity parameters will remain the same.

b. When the suggested entry is selected, proceed to step 10.

c. If two reference marks are being processed and only one of the entered local track numbers has been previously assigned, both fixes are entered into the system with the same category and identity parameter as the existing item with that track number. Proceed to step 20.

d. If two reference marks are being processed and the track numbers entered were the suggested entries, proceed to step 10.

10. The following cue appears:

SEL CAT-ID

1	AIR	F	6	SUB	H
2	SURF	F	7	AIR	U
3	SUB	F	8	SURF	U
4	AIR	H	9	SUB	U
5	SURF	H			

11. Respond to the SEL CAT-ID cue.

    a. If cue decision 1, 4, 5, or 7 is selected, proceed to step 24.

    b. If decision 2 is selected, proceed to step 12.

    c. If cue decision 3, 6, or 9 is selected, proceed to step 14.

    d. If decision 8 is selected, proceed to step 22.

12. Press ENTER.

    a. The following cue appears:

SEL PRI ID AMP
1 CONFIRMED FRIEND
2 AUXILIARY
3 SPECIAL MISSION
4 AMPHIBIOUS
5 LINE
OPTNL

13. Respond to the SEL PRI ID AMP cue.

    a. Press 1, 2, 3, 4, or 5 on the keyset. Proceed to step 24.

14. Press ENTER.

    a. The following cue appears:

SURFACED SUB
1 YES
2 NO

15. Respond to the SURFACED SUB cue.

    a. If decision 1 is selected, proceed to step 20.

    b. If decision 2 is selected, proceed to step 16.

    c. A skip cue or term cue sequence response shall assume NO to the cue.

16. Press ENTER.

    a. The following cue appears:

SEL SUBSURF CLASS
1 NO STATEMENT
2 POSSIBLE SUB
3 PROBABLE SUB
4 CERTAIN SUB
5 NON SUB

17. Respond to the SEL SUBSURF CLASS cue.

    a. If cue decision 1 or 5 is selected, all fixes being processed (either one or two) are entered into the system with the same category and identity parameters. Proceed to step 24.

    b. If one decision 2, 3, or 4 is selected, proceed to step 18.

18. Press ENTER.

    a. The following cue appears:

ENT CONF LEVEL 1-4

19. Respond to the ENT CONF LEVEL cue.

20. Press ENTER.

    a. The following cue appears:

SEL CLASS AMP
1 PROPULSION UNK
2 PROPULSION CON
3 PROPULSION NUC

21. Respond to the SEL CLASS AMP cue.

    a. Press 1, 2, or 3 on the keyset. Proceed to step 24.

22. If decision 8 (surface unknown) is selected in response to the SEL CAT-ID cue, press ENTER.

    a. The following cue appears:

SEL PRI ID AMP
1 EVALUATED UNK
2 ASSUMED FRIEND
3 ASSUMED HOST

23. Respond to the SEL PRI ID AMP cue.

    a. Press 1, 2, or 3 on the keyset.

24. Press ENTER.

25. Upon entry of the fixes into the system, the following occurs:

    a. All reference marks are removed from the display.

    b. The initial ESM bearing (if any) is removed from the display.

    c. The ACK CNTCT alert is displayed at the other stations (except pilot).

    d. Function deactivates.

DEACTIVATION:

1. CMPT INTSCT is deactivated if pressed when amber.

2. Deactivation results:

    a. Cues and associated CMPT INTSCT symbols are removed.

    b. CMPT INTSCT changes from amber to green.

2.9.5.7 PROB CONTOR Option

TACCO
SENSO
COTAC

TAC AIDS

PURPOSE:

Generates and displays an ellipse around a hooked track, allowable fix, or intercept FTP.

PREREQUISITES:

1. TAC AID matrix is active.

2. Hook a track, allowable fix, or intercept FTP.

PROCEDURE:

1. Press PROB CONTOR.

    a. The following cue appears:

    ENT PROBABILITY

2. Respond to the cue.

    a. Press a numeric on the keyset (1 through 9) to enter desired probability and proceed to step 3.

    b. If the suggested entry is accepted, proceed to step 3.

3. Press ENTER.

    a. If no alert appears and a track was hooked, the following cue appears:

    ENT TIME-MIN
    - ---

Note

When an intercept FTP has been hooked the ENT TIME-MIN cue is not displayed. The time interval is the time needed to intercept the FTP. This cue allows the operator to display the probability contour for a specified time period.

    b. If no alert appears and an allowable fix or intercept FTP was hooked, proceed to step 6.

4. Respond to the ENT TIME-MIN cue.

    a. Press numerics on the keyset to enter the desired time.

5. Press ENTER.

    a. The selected probability contour is displayed around the symbol.

    b. The contour is updated every 2 seconds.

6. The following cue appears:

    ENT SPEED-KTS
    --

7. Respond to the ENT SPEED-KTS cue.

   a. Press numerics on the keyset (00 to 99).

8. Press ENTER.

   a. The selected probability contour is displayed around the allowable fix or intercept FTP.

   b. The contour is updated every 2 seconds.

DEACTIVATION:

1. PROB CONTOR is deactivated if pressed when amber.

2. Deactivation results:

   a. Cues and associated PROB CONTOR symbol are removed from display.

   b. PROB CONTOR changes from amber to green.

2.9.5.8 SINGLE PRED Option

TACCO
SENSO
COTAC

TAC AIDS

PURPOSE:

Generates and displays a single prediction of the past or future position of a fix or track.

PREREQUISITES:

1. TAC AIDS matrix is active.

2. A fix or track symbol is hooked.

PROCEDURE:

1. Press SINGLE PRED (lights amber).

   a. If the hooked symbol is a fix, the following cue appears:

      ENT COURSE-DEG
      ---

   b. If the hooked symbol is a track, the following cue appears:

      ENT TIME-MIN
      - ---

      (1) Proceed to step 6.

2. Respond to the ENT COURSE-DEG cue.

   a. Press numerics on the keyset to enter the desired course.

3. Press ENTER.

   a. The following cue appears:

      ENT SPEED-KTS
      ---

4. Respond to the cue.

   a. Press numerics on the keyset to enter the desired speed.

5. Press ENTER.

   a. The following cue appears:

      ENT TIME-MIN
      - ---

6. Respond to the ENT TIME-MIN cue.

   a. Press numerics on keyset to enter (+ or –) desired time, based on computer time.

7. Press ENTER.

   a. A single predict symbol is displayed at the computed future or past position on the COTAC, TACCO, and SENSO MPDs.

Note

One single predict symbol is allowed in the system at a time.

DEACTIVATION:

1. SINGLE PRED is deactivated if pressed when amber.

2. Deactivation results:

   a. Removal of cues and symbol from the displays.

   b. SINGLE PRED changes from amber to green.

2.9.5.9 INTCPT FTP Option

TACCO
SENSO
COTAC

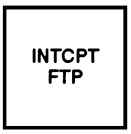

TAC AIDS

PURPOSE:

Computes and displays a target intercept FTP.

PREREQUISITES:

1. TAC AIDS matrix is active.
2. A track symbol or continuous predict is hooked.

PROCEDURE:

1. Press INTCPT FTP (lights amber).
   a. If no alert appears:
      (1) The intercept FTP is displayed.
      (2) Steering commands are initiated to capture the FTP.

Note

Only one intercept FTP may be active at one time.

DEACTIVATION:

1. INTCPT FTP is deactivated if pressed when amber.
2. Deactivation results:
   a. INTCPT FTP changes from amber to green.
   b. The intercept FTP is removed from the display.

2.9.5.10 ORBIT Option

TACCO
SENSO
COTAC

TAC AIDS

PURPOSE:

Generates and displays an orbit FTP that provides steering commands which either direct the aircraft to the center of the circle (datum capture) and then into the circle, or direct the aircraft to a point on the circle (tangential capture) and then around the circle.

PREREQUISITES:

1. TAC AIDS matrix is active.
2. Center of orbit is designated by hooking a point.

PROCEDURE:

1. Press ORBIT (lights amber).
   a. The following cue appears.

      ENT RADIUS-YDS
      -----

2. Respond to the ENT RADIUS-YDS cue.
   a. If the suggested entry is selected, proceed to step 3.
   b. Enter the orbit radius by pressing the numerics on the keyset.
3. Press ENTER.
   a. If no alert appears, the following cue appears:

      SEL CAPTURE TYPE
      1 DATUM
      2 TANGENTIAL

      (1) The orbit circle is displayed on the MPD.
   b. If the following alert appears:

      ZZZZ ORBIT LIMIT

      (1) An orbit radius less than the aircraft minimum turn radius was selected.
      (2) ENT RADIUS-YDS cue remains displayed.
      (3) Reenter orbit radius per step 2.
4. Respond to the SEL CAPTURE TYPE cue.
   a. Operator selects either 1 or 2 on the keyset.

5. Press ENTER.

   a. The orbit circle becomes an FTP.

   b. The program generates steering commands necessary for the aircraft to capture the FTP as selected, and to fly the aircraft in the specified orbit.

DEACTIVATION:

1. ORBIT is deactivated if pressed when amber.
2. Deactivation results:

   a. The orbit circle is removed from the MPD.

   b. FTP is removed from the system.

   c. ORBIT changes from amber to green.

2.9.6 SONO CONT Matrix

TACCO
SENSO

SONO CONT

The SONO CONT Matrix and all associated option selections are blacklit and no longer available.

2.9.7 PILOT DSPL Matrix

TACCO
SENSO
COTAC

PILOT DSPL

PURPOSE:

Displays option select function legends associated with the PILOT DSPL matrix.

PREREQUISITE:

None.

PROCEDURE:

1. Press PILOT DSPL (lights amber).

Note

- Pilot display legend on the COTAC INCOS is PLT DSP.
- PLT DSP at the COTAC station does not light amber when pressed. The legend goes black and the matrix C DPOSIT SYMBOL legend appears.

   a. PILOT DSPL option select function legends are displayed in the upper half of the TACCO matrix B option select switches.

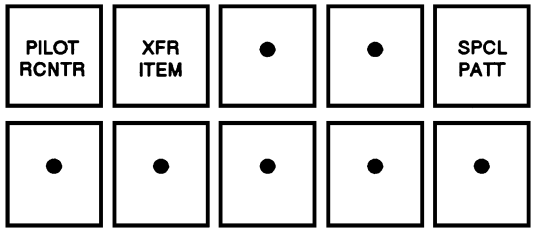

   b. PLT DSP option select function legends at the COTAC station are displayed in the lower half of the matrix B option select switches.

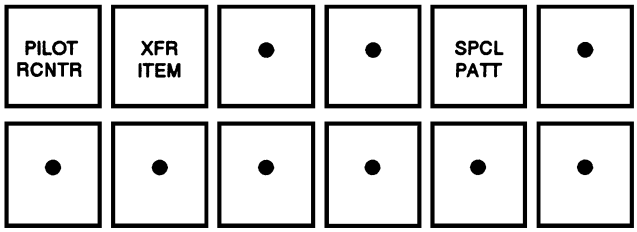

DEACTIVATION:

1. PILOT DSPL/PLT DSP matrix is deactivated when another matrix select switch is pressed that requires replacing of the option select legends.
2. Deactivation results:

   a. PILOT/DSPL/PLT DSP option select function legends are replaced by option select function legends associated with another matrix select.

   b. PILOT DSPL matrix switch legend changes from amber to green.

2.9.7.1 PILOT RCNTR Option

TACCO
SENSO
COTAC

PILOT DSPL

PURPOSE:

Recenters the pilot display on a hooked position.

PREREQUISITES:

1. PILOT DSPL/PLT DSP matrix is active.
2. A position has been hooked.

PROCEDURE:

1. Press PILOT RCNTR (momentary).
   a. The pilot display is recentered on the hooked position.

2.9.7.2 XFR ITEM Option

TACCO
SENSO
COTAC

PILOT DSPL

PURPOSE:

Transfers a designated/selected symbol to the pilot display.

PREREQUISITES:

1. PILOT DSPL/PLT DSP matrix is active.
2. A symbol has been hooked.
3. TAC PLOT, ESM plot, or scan-converted radar active.

PROCEDURE:

1. Press XFR ITEM (lights amber).
   a. The hooked symbol is transferred to the pilot display.

Note

A total of three items can be transferred to the pilot display at any one time, one each from the COTAC, TACCO, and SENSO stations.

DEACTIVATION:

1. XFR ITEM is deactivated if pressed when amber.
2. Deactivation results:
   a. XFR ITEM changes from amber to green.
   b. The symbol is removed from the pilot display.

2.9.7.3 SPCL PATT Option

TACCO
SENSO
COTAC

PILOT DSPL

PURPOSE:

Displays a geometric pattern with as many as eight sides depicting an area of interest.

PREREQUISITES:

1. PILOT/PLT DSP matrix is active.
2. TAC PLOT or scan-converted radar is active.
3. A point on the display has been hooked.

PROCEDURE:

1. Press SPCL PATT (lights amber).
   a. The following cue appears:

      HOOK NEXT POINT

2. Respond to the HOOK NEXT POINT cue.
   a. Position hook to another point.
3. Press HOOK VERIFY.
4. Press ENTER.
   a. A vector is displayed from the first hooked point to the second hooked point.

b. To add additional vectors, repeat steps 2, 3, and 4.

Note

Construction of eight vectors removes the HOOK NEXT POINT cue from the display and the function is completed.

c. The HOOK NEXT POINT cue remains displayed until the operator has constructed the desired search area.

Note

The HOOK NEXT POINT cue becomes optional.

d. To terminate the cueing sequence before the eighth vector is displayed, proceed to step 5.

5. Press TERM CUE SEQ.

a. HOOK NEXT POINT cue is erased from the display.

b. The special pattern is displayed at all other stations.

DEACTIVATION:

1. SPCL PATT is deactivated if pressed when amber.

2. Deactivation results:

a. SPCL PATT changes from amber to green.

b. The special pattern is removed from all displays.

2.9.8 PTA/CON PTA Matrix

TACCO
SENSO
COTAC

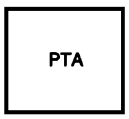

PTA

PURPOSE:

Displays option select function legends associated with the PTA/CON PTA mode.

PREREQUISITE:

None.

PROCEDURE:

1. Press CON PTA (lights amber).

Note

- The PTA Matrix and all associated option selections are blacklit and no longer available.
- At the COTAC station the following CON PTA matrix selections are blacklit and no longer available: TGT TRKR, POSN UPDATE, TRKR RSTRT, BRG INHIBIT, PTA AMPLIFY, PATT UPDATE.
- CON PTA at COTAC station does not light amber when pressed. Legend goes black and the matrix C CON PTA legend appears.

a. CON PTA option select function legends at the COTAC station are displayed in the lower half of matrix B option select switches.

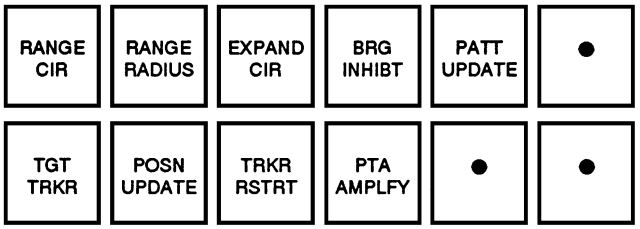

DEACTIVATION:

1. CON PTA matrix is deactivated when another matrix select switch is pressed that requires replacing of the option select legends.

2. Deactivation results:

a. CON PTA option select function legends are replaced by option select function legends associated with another matrix select.

Note

RANGE CIR, RANGE RADIUS, and EXPAND CIR options are discussed under TACCO/SENSO display control functions.

2.9.9 REINIT Matrix

TACCO
SENSO
COTAC

REINIT

PURPOSE:

Displays option select function legends associated with the REINIT.

PREREQUISITE:

None.

PROCEDURE:

1. Press REINIT (lights amber).

Note

- Reinitialize legend on the COTAC INCOS is RNZ.
- RNZ at the COTAC station does not light amber when pressed. The legend goes black and the matrix C DSTRY DATA legend appears.

a. REINIT option select function legends are displayed in the upper half of the matrix A option select switches.

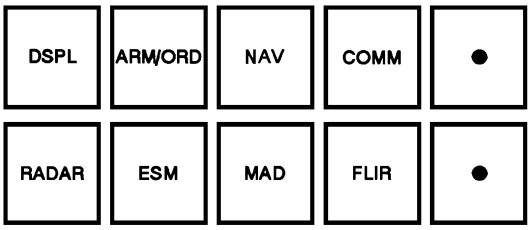

DEACTIVATION:

1. REINIT matrix is deactivated when another matrix select switch is pressed that requires replacing of the option select legends.
2. Deactivation results.

a. REINIT option select function legends are replaced by the set of option select function legends associated with another matrix select.

b. REINIT matrix switch legend changes from amber to green.

2.9.9.1 DSPL Option

TACCO
SENSO
COTAC

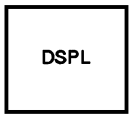

REINIT

PURPOSE:

Reinitializes the tactical display system.

PREREQUISITE:

1. REINIT/RNZ matrix is active.

PROCEDURE:

1. Press DSPL (momentary).

a. Tactical display system is reinitialized as described in Initialization Under Operational Program Loading procedures.

2.9.9.2 ARM/ORD Option

TACCO
SENSO
COTAC

REINIT

PURPOSE:

Displays SLC and weapon stations status on the SEARCH STORES INVENTORY and KILL STORES INVENTORY Tableaus without using the SYSTEM STATUS Tableau cueing sequence. The ARM/ORD switch is also used to clear momentary defects that appear in the SYSTEM STATUS Tableau and perform SLC continuity checks.

PREREQUISITE:

1. REINIT/RNZ matrix is active.

PROCEDURE:

1. Press ARM/ORD (momentary).

    a. Reinitializes the armament system as described under the armament system (refer to Chapter 3).

2.9.9.3 NAV Option

TACCO
SENSO
COTAC

REINIT

PURPOSE:

Reinitializes the NDCR/NIU without using the SYSTEM STATUS Tableau cueing sequence.

PREREQUISITE:

1. REINIT/RNZ matrix is active.

PROCEDURE:

1. Press NAV(momentary).

    a. Clears DEF and DIS status in SYSTEM STATUS Tableau.

    b. Establishes communication between NDCR/NIU and GPDC.

2.9.9.4 COMM Option

TACCO
SENSO
COTAC

REINIT

PURPOSE:

Reestablishes communication with the GPDC for the communication system.

PREREQUISITES:

1. REINIT/RNZ matrix is active.

PROCEDURE:

1. Press COMM (momentary).

2.9.9.5 RADAR Option

TACCO
SENSO
COTAC

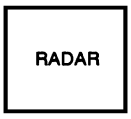

REINIT

PURPOSE:

Reinitializes the radar system to the last known parameters without using the SYSTEM STATUS Tableau cueing sequence.

PREREQUISITE:

1. REINIT/RNZ matrix is active.

PROCEDURE:

1. Press RADAR (momentary).

    a. Reinitializes the radar to the last known parameters.

2.9.9.6 ESM Option

TACCO
SENSO
COTAC

REINIT

PURPOSE:

Reinitializes or reloads the OMP in the ESM.

Note

Reinitializing the ESM via system status will have the same effect.

PREREQUISITE:

1. ESM switch on.
2. REINIT matrix active.

PROCEDURE:

1. Press ESM (lights amber).

2. Following cue is displayed:

   SEL ESM REINIT
   1 REINIT
   2 RELOAD-REINIT

3. Select 1 or 2 and press ENTER.

4. The following cue is displayed.

   SEL OBLIB-SOI SRC
   1 BOTH CURRENT
   2 BOTH PID
   3 CURRENT-PID
   4 PID-CURRENT
   OPTNL

5. If 1 is selected, ESM Operator Library entries and SOI lists remain at their current values.

6. If 2 is selected, ESM Operator Library entries and SOI lists are reset to the PID condition.

7. If 3 is selected, ESM Operator Library entries are reset to the PID condition and ESM SOI lists remain at their current values.

8. If 4 is selected, ESM Operator Library entries are reset to the PID condition and ESM SOI lists remain at their current values.

Note

If 1 or 4 is selected, the current active SOI list is downloaded to the ALR-76 and will be displayed for any subsequent RESET SOI.

9. The following cue is displayed:

   SEL DFLT TMPLTS
   1 YES
   2 NO

10. Select 1 or 2 and press ENTER.

Note

Utilizing the 9.3 software, it is recommended that the templates should not be utilized to aid in agile processing. However, selecting default templates will not adversely affect performance.

11. The following cue is displayed:

    SEL PLOT DENSITY
    1 LOW
    2 HIGH

12. Select 1 or 2 and press ENTER.

13. If 1 is selected, 8 emitters will be available for display, 16 may be retained.

14. If 2 is selected, 16 emitters will be available for display, 8 may be retained.

15. If ESM REINIT was selected, ESM is reinitialized.

16. If ESM RELOAD-REINIT was selected, ESM will load accordingly.

2.9.9.7 MAD Option

TACCO
SENSO
COTAC

REINIT

The MAD option select is blacklit and no longer available.

2.9.9.8 FLIR Option

TACCO
SENSO
COTAC

REINIT

PURPOSE:

Reinitializes the FLIR system to the last known configuration without using the SYSTEM STATUS Tableau cueing sequence.

PREREQUISITE:

1. REINIT/RNZ matrix is active.

PROCEDURE:

1. Press FLIR (momentary).

   a. Reinitializes the FLIR as described under FLIR system (refer to Chapter 6).

2.10 TACTICAL DIAGNOSTIC/ OPERATIONAL READINESS TESTS

2.10.1 Introduction. The TD and ORT tests provide for a systematic and timely test of various systems installed aboard the S-3B.

2.10.2 Tactical Diagnostic Tests. These provide the operator with the means to determine faulty components when system malfunctions are encountered during normal operation. The TD provides a readout in the appropriate EXPANDED SYSTEM STATUS Tableau of defective components or cards within the WRA or SRA. TDs are available for the following systems:

1. Radar
2. ESM

2.10.3 Operational Readiness Tests. These provide the operator with a GO or NO-GO status of a system prior to launch. The ORT tests the hardware by sending signals through the system which simulate tactical operations. Proper transmission and reception of test signals result in a GO status indicating a high probability of normal airborne operation. ORTs are available for the following systems:

1. Radar
2. ESM

2.10.4 DIA/ORT MATRIX

COTAC | DIA ORT | DIA/ ORT

PURPOSE:

Displays option select function legends associated with the DIA/ORT matrix at the COTAC station.

PREREQUISITE:

None.

PROCEDURE:

1. Press DIA/ORT at COTAC (lights amber).
   a. DIA/ORT option select function legends at the COTAC station are displayed.

(COTAC DIA/ORT)

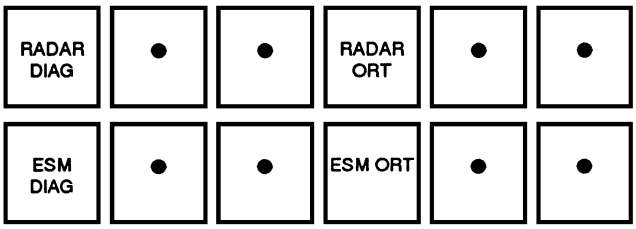

DEACTIVATION:

1. DIA/ORT matrix is deactivated when another matrix select switch is pressed that requires replacing of the option select legends.
2. Deactivation results:
   a. DIA/ORT option select function legends are replaced by the option select function legends associated with another matrix.
   b. DIA/ORT matrix switch legend change from amber to green.

2.10.4.1 RADAR DIAGNOSTIC Option

COTAC | RADAR | DIA/ORT

PURPOSE:

To assist the operator in assessing the radar functional capability to support the assigned mission.

To determine WRA fault isolation and replacement data for use by 0-level maintenance crews.

PREREQUISITES:

1. Radar is warmed up.
2. Radar ORT function is not active.
3. DIA/ORT matrix is active.

PROCEDURE:

1. Press RADAR DIAG (lights amber).

   a. The following cue appears:

   SEL RAD OPTION
   1 NO RADIATE
   2 DUMMY RADIATE
   3 ANTENNA RADIATE

2. Respond to the SEL RAD OPTION cue.

   a. Press numerics on the keyset to select the desired option.

   b. If (1) NO RADIATE was selected, proceed to step 3.

   c. If (2) DUMMY RADIATE was selected, proceed to step 4.

   d. If (3) ANTENNA RADIATE was selected, proceed to step 7.

WARNING

- The radar shall be secured during in-flight refueling operations.
- Proper safety shall be exercised by flightcrews during close formation flying within 250 feet.
- Observe the following radiation hazard distances to prevent fire or personnel injury during ground operations:

	Full Power	Dummy Load
Fueling equipment	250 feet	0 feet
Fuel tanks	250 feet	0 feet
Personnel	250 feet	0 feet

3. Press ENTER.

   a. The following alert is displayed upon test completion:

   RDR INCM RAD

Note

The radar incomplete radiate alert notifies the operator that the DIAG was not run as a complete test. This test checks the status of RIU only.

4. Press ENTER.

   a. The following cue appears:

   ALERT PERSONNEL
   BEFORE RADIATING
   PRESS ENTER

5. Press ENTER.

   a. The following cue appears if weight-on-wheels condition exists:

   ENGAGE AND HOLD ACLS-RADAR TEST SWITCH IN RADAR POSITION
   PRESS ENTER

Note

Depressing ENTER overrides the weight-on-wheels logic and initiates the RIU self-test.

6. Press ENTER.

   a. Upon test completion, the following alerts appear:

   RELEASE ACLS-RADAR

   RDR INCM RAD

7. Press ENTER.

   a. The following cue appears:

   SEL TILT
   1 +10 6 –15
   2 +5
   3 0
   4 –5
   5 –10

8. Respond to the SEL TILT cue.

    a. Press numerics on the keyset to select the desired tilt.

9. Press ENTER.

    a. The following cue appears:

```
SEL TEST SECTOR
1  10      6  60
2  20      7  90
3  30      8  120
4  40      9  FULL
5  50
```

10. Respond to the SEL TEST SECTOR cue.

    a. Press numerics on the keyset to select the desired sector width.

    b. If any selection other than FULL was selected, proceed to step 11.

    c. If FULL was selected, proceed to step 12.

11. Press ENTER.

    a. The following cue appears:

```
POSITION VECTOR TO
DESIRED ANTENNA ANGLE
IN DISPLAYED LIMITS
PRESS ENTER
```

12. Repeat steps 4 and 5.

13. Press ENTER.

    a. The following cue appears:

```
OBSERVE ANTENNA
SECTORING OVER
ANTENNA VECTOR
PRESS ENTER
```

14. Press ENTER.

    a. Upon test completion, the following alerts appear:

```
RELEASE ACLS

RADAR GO (if no faults are noted)
```

DEACTIVATION:

1. RADAR DIAG is deactivated when one of the following occurs:

    a. RADAR DIAG in COTAC DIA ORT matrix is pressed when amber.

    b. Activation of another function requiring the use of the cueing area.

2. Deactivation results:

    a. RADAR DIAG changes from amber to green.

2.10.4.2 ESM DIAG Option

COTAC | ESM | DIA/ORT

PURPOSE:

To assist the operator in assessing the ESM functional capability to support the assigned mission.

To determine WRA fault isolation and replacement data for use by 0-level maintenance crews.

PREREQUISITES:

1. DIAG matrix is active.
2. ESM ORT is not active.
3. ESM INIT/REINIT is not active.

PROCEDURE:

1. Press ESM DIAG (lights amber).
2. ESM diagnostics is loaded and the following alert is displayed:

```
ZZZZ ESM LOADING
```

3. ESM DIAG is initiated.

4. ESM EXPANDED SUBSYSTEM STATUS Tableau is displayed.

   a. If no faults are noted, the following alert is displayed:

      ZZZZ ESM GO

DEACTIVATION:

1. ESM DIAG is deactivated when one of the following occurs:

   a. ESM DIAG is pressed when amber.

   b. ESM DIAG test completion.

   c. Activation of ESM INIT/REINIT.

Note

After an ESM GO alert is received, the ESM OMP and PDIP data must be reloaded via the REINIT or PRGM CNTL matrices.

2. Deactivation results:

   a. ESM DIAG in the COTAC DIA ORT matrix changes from amber to green.

   b. SYSTEM STATUS Tableau is updated.

2.10.4.3 RADAR ORT Option

COTAC | RADAR | DIA/ORT

PURPOSE:

To assist the operator in assessing the radar functional capability to support the assigned mission.

PREREQUISITES:

1. Radar is warmed up.

2. Radar DIAG function is not active.

3. DIA ORT matrix is active.

PROCEDURE:

1. Press RADAR ORT (lights amber).

   a. The following cue appears:

      SEL RAD OPTION
      1 NO RADIATE
      2 DUMMY RADIATE
      3 ANTENNA RADIATE

2. Respond to SEL RAD OPTION cue.

   a. Press numerics on the keyset to select the desired option.

   b. If (1) NO RADIATE was selected, proceed to step 3.

   c. If (2) DUMMY RADIATE was selected, proceed to step 4.

   d. If (3) ANTENNA RADIATE was selected, proceed to step 7.

WARNING

- RF radiation hazards exist for the S-3B radar when the cue decision (3) ANTENNA RADIATE is selected.

- An RF radiation standoff distance for personnel and for fuel or fueling equipment (250 feet) shall be observed.

3. Press ENTER.

   a. The following alert is displayed upon test completion:

      RDR INCM RAD

Note

The radar incomplete radiate alert notifies the operator that the ORT was not run as a complete test. This test checks the status of RIU only.

4. Press ENTER.

   a. The following cue appears:

   ALERT PERSONNEL BEFORE
   RADIATING PRESS ENTER

5. Press ENTER.

   a. The following cue appears:

   ENGAGE AND HOLD ACLS — RADAR
   TEST SWITCH IN RADAR
   POSITION PRESS ENTER

Note

Depressing ENTER overrides the weight-on-wheels logic and initiates the RIU self-test.

6. Press ENTER.

   a. Upon test completion, the following alerts appear:

   RELEASE ACLS-RADAR
   RDR INCM RAD

7. Press ENTER.

   a. The following cue appears:

   SEL TILT
   1 +10 4 – 5
   2 +5 5 – 10
   3 0 6 – 15

8. Respond to the SEL TILT cue.

   a. Press numerics on the keyset to select the desired tilt.

9. Press ENTER.

   a. The following cue appears:

   SEL TEST SECTOR
   1 10 6 60
   2 20 7 90
   3 30 8 120
   4 40 9 FULL
   5 50

10. Respond to the SEL TEST SECTOR cue.

    a. Press numerics on the keyset to select the desired sector width.

    b. If any selection other than FULL was selected, proceed to step 11.

    c. If FULL was selected, proceed to step 12.

11. Press ENTER.

    a. The following cue appears:

    POSITION VECTOR TO
    DESIRED ANTENNA ANGLE
    IN DISPLAYED LIMITS
    PRESS ENTER

12. Repeat steps 4 and 5.

13. Press ENTER.

    a. The following cue appears:

    OBSERVE ANTENNA SECTORING OVER ANTENNA VECTOR PRESS ENTER

14. Press ENTER.

    a. Upon test completion, the following alerts appear:

    RELEASE ACLS-RADAR

    RADAR GO (if no faults are noted)

DEACTIVATION:

1. RADAR ORT is deactivated when one of the following occurs:

   a. RADAR ORT is pressed when amber.

   b. Activation of another function requiring the use of the cueing area.

2. Deactivation results:

   a. RADAR ORT changes from amber to green.

2.10.4.4 ESM ORT Option

COTAC | ESM | DIA/ORT

PURPOSE:

To assist the operator in assessing the ESM functional capability to support the assigned mission.

PREREQUISITES:

1. ORT matrix is active.
2. ESM DIAG is not active.

PROCEDURE:

1. Press ESM ORT (lights amber).
2. ESM ORT is initiated.
    a. If no faults are noted, the following alert is displayed:

    ESM GO

DEACTIVATION:

1. ESM ORT is deactivated when one of the following occurs:
    a. ESM ORT is pressed when amber.
    b. ESM ORT test completion.
    c. Activation of ESM INIT/REINIT.
2. Deactivation results:
    a. ESM ORT changes from amber to green.
    b. SYSTEM STATUS Tableau is updated.

PART II

Armament

Chapter 3 — Armament

CHAPTER 3

Armament

3.1 ARMAMENT SYSTEM

The S-3 armament system consists of search stores, kill stores, and the controls for their release. Search stores are carried in the aft section of the fuselage and consist of A-size prepackaged sonobuoys such as DIFAR, VLAD, DICASS, SUS, and smokes. Detailed search stores information, including carry and release authorization, is provided in the S-3B TACMAN, NWP 3-22.5-S3B Vol. II Appendix A. Kill stores are carried in two internal bomb bays and/or on a pylon on each wing. Various combinations of torpedoes, flares, missiles, and cluster bombs can be accommodated. Detailed kill stores information, including carry and release authorization, is provided in the S-3B TACMAN, NWP 3-22.5-S3B Vol. II Appendix A.

3.2 SEARCH STORES

3.2.1 Introduction. The S-3 provides for the storage, selection and release of 16 search stores, prepackaged in launching containers and carried in individual launcher chutes in the aft section of the fuselage (see Figure 3-1). Launch power is furnished by an electrically initiated gas generator cartridge attached to each search store launch container. Upon electrical impulse to the cartridge, through the aircraft breech circuit, the search store is launched directly from its container. The container remains in the chute. See Figure 3-2 for maximum sonobuoy launch envelopes.

The search stores launching system provides for both automatic (on-line) and manual (off-line) inventory management, selection control, and release of 15 of the 16 stores. Emergency jettison of sonobuoys can be accomplished within 4 to 7 seconds by preprogrammed sequential launching of 15 sonobuoys. One sonobuoy (chute P-2) is reserved for SAR purposes and is not tactically employed or jettisoned. The system is normally operated in the automatic (on-line) mode with the GPDC. If the computer is inoperative, the system can be operated in the manual (off-line) mode by the TACCO, using the search stores control panel (see Figure 3-3).

Selected search stores are automatically released, during on-line operation, when the aircraft captures an expendable FTP.

3.2.2 Launcher Chutes. Sixteen launcher chutes are provided in the aft unpressurized fuselage, oriented to launch in a downward-aft direction with respect to the fuselage reference plane. Each chute consists of a breech, a bottom support collar and a means for guiding a store between collar and breech during loading. Electrical contacts for cartridge initiation are contained in each breech with internal circuit ground return provided.

WARNING

The sonobuoy safety switch access door shall be in the full OPEN and locked position when personnel are underneath the search stores launching chutes.

CAUTION

If electrical power is interrupted to the right CLA, the wing racks will unlock (wing stores will not jettison). If electrical power is interrupted to the right CLA and the sonobuoy safety door is closed, the sonobuoys on the jettison circuit will jettison. Electrical power can be interrupted by turning off all essential bus power or by cycling the right CLA circuit breakers (3-G-15 and 4-D-16). If it becomes necessary to interrupt power to the right CLA, jettison of sonobuoys can be prevented by pulling the search stores control circuit breaker (3-D-13) and wing rack unlock can be prevented by pulling the wing jettison circuit breaker (4-B-1).

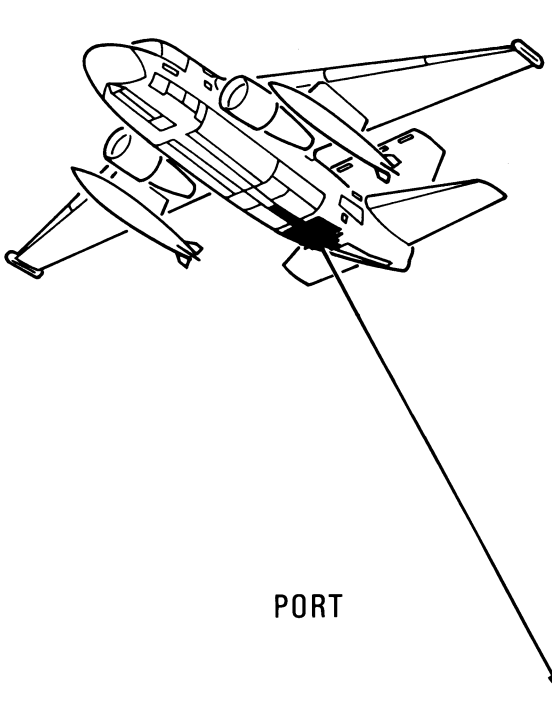

P-1 15
P-2 SAR
O-1 10
O-2 7
N-1 4
N-2 2
M-1 13
M-2 14
L-1 9
L-2 6
K-1 5
K-2 8
J-1 1
J-2 3
H-4 11
H-5 12

PORT

STBD

FWD

NOTE

THE FOLLOWING LIMITATIONS SHALL BE OBSERVED WHEN LOADING SONOBUOYS IN THE S-3B:

- MAXIMUM ALLOWABLE SONOBUOY WEIGHT (INCLUDING NONEXPENDABLES) IS 2154 POUNDS.
- HEAVIER SONOBUOYS SHALL BE LOADED IN THE FORWARD CHUTES.
- THE RESULTING AIRCRAFT CENTER-OF-GRAVITY SHALL BE WITHIN LIMITS.
- THE RESULTING TAKEOFF PITCH TRIM SHALL BE WITHIN LIMITS.

Figure 3-1. Chute Alphanumerics and Buoy Jettison Sequence

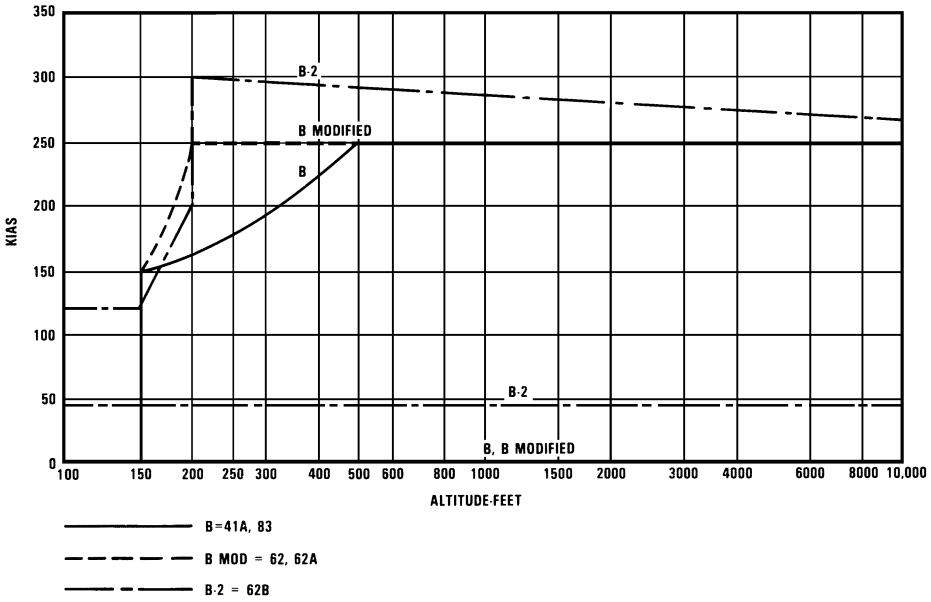

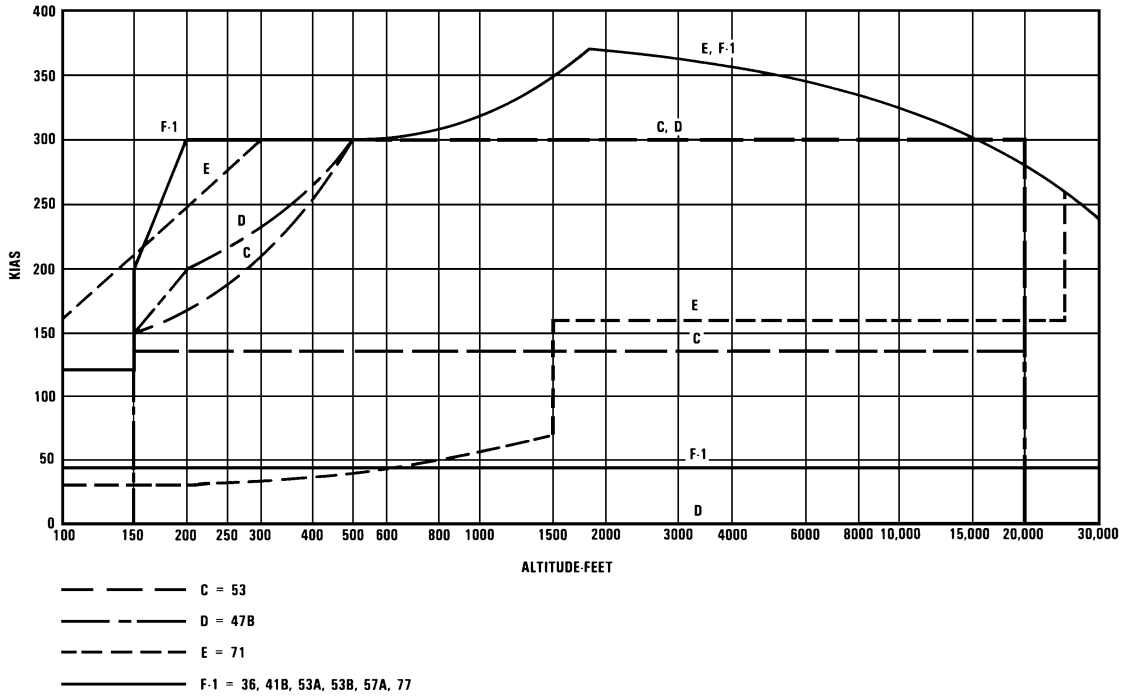

Figure 3-2. Maximum Sonobuoy Launch Envelopes

Note

If the sonobuoy safety switch is SAFE, no sonobuoys, including the SAR sonobuoy, can be dropped or jettisoned, either on deck or in flight.

The chute exits are individually accessible from beneath the fuselage for preflight loading or unloading of stores. Prior to the start of loading or unloading, a safety switch, located just forward of the chute array, is actuated by opening its access door (see Figure 3-4). This action opens all cartridge primer leads, grounds the cartridge cases, and indicates launch circuit disablement by a light on the ACP. The open access door, appropriately marked, indicates the safe condition externally. Loading consists of manually inserting the prepackaged search stores into the chute exits, pushing it up into contact with the breech and, with a quarter turn, locking it in place. Inventory data (buoy type, life, depth, and channel location) are recorded on a placard that can be inserted in the search stores control panel (see Figure 3-3).

3.3 SEARCH STORES CONTROL

Search stores controls are listed in Figure 3-5. Their functions are described below:

1. Manual search stores control panel — Allows the operator to select either the AUTO or MAN mode of operation.
2. Program decoder — Interfaces automatic, manual and jettison modes with launcher chute circuitry.
3. Sonobuoy safety switch — Protects loading personnel from accidentally firing a store.
4. Search stores power supply — Provides necessary power for INCOS launch and jettison capability.
5. Sonobuoy safety switch indicator — Alerts the pilot that the sonobuoy safety switch door is open when SONB is lighted red.
6. Search power cue lamp — Advises the pilot to position the SRCH PWR switch to ON. (On-line only.)
7. SAR switch — Alerts the pilot that a sonobuoy is loaded in chute P-2, and allows the crew to deploy the buoy.
8. Search power switch (SRCH PWR) — Provides launch power for MAN or AUTO mode.
9. Search power safety disable switch — Allows personnel to ground check the launcher chute system.

3.3.1 Search Power (SRCH PWR) Switch. The SRCH PWR switch (see FO-1) provides launch power for the automatic and manual modes when set to the ON position. Launch power is removed when set at the OFF position. The SRCH PWR switch furnishes the pilot with ultimate launch control over all search store releases with the exception of chute P-2.

Note

- The SRCH PWR cue light only operates in the automatic mode.
- During the manual mode operation, the TACCO must inform the pilot to change the switch position.

3.3.2 Search Stores Manual Mode Operation

WARNING

On aircraft without AVC-2095 incorporated, failure of a search store decoder may cause an inadvertent sonobuoy release. Power to the SESCOS must be removed by pulling the SEARCH STORES POWER and SEARCH STORES CONTROL circuit breakers and leaving the power secured at all times except when actually dropping buoys or when an inadvertent release would not be hazardous.

The manual search stores control panel control functions are listed in Figure 3-6.

The manual (off-line) mode of operation is a backup method of search stores control and release that is available to the TACCO station only. The manual mode is independent of the computer. All controls for selection, testing, and release of search stores are located at the TACCO station on the manual search stores control panel (Figure 3-3).

The SRCH PWR cue lamp is inoperative in the manual mode. The TACCO and pilot must use the ICS to coordinate use of the SRCH PWR switch. Refer to Figure 3-7 procedures for selection, test, and release of search stores.

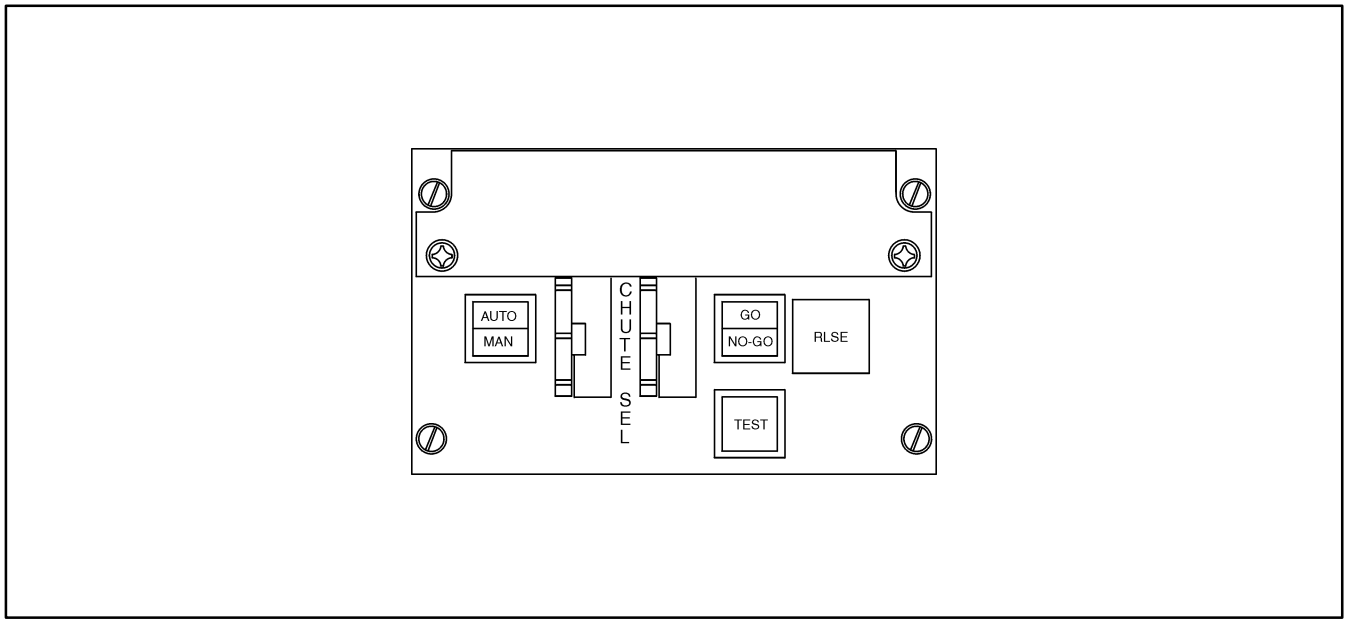

Figure 3-3. Manual Search Stores Control Panel

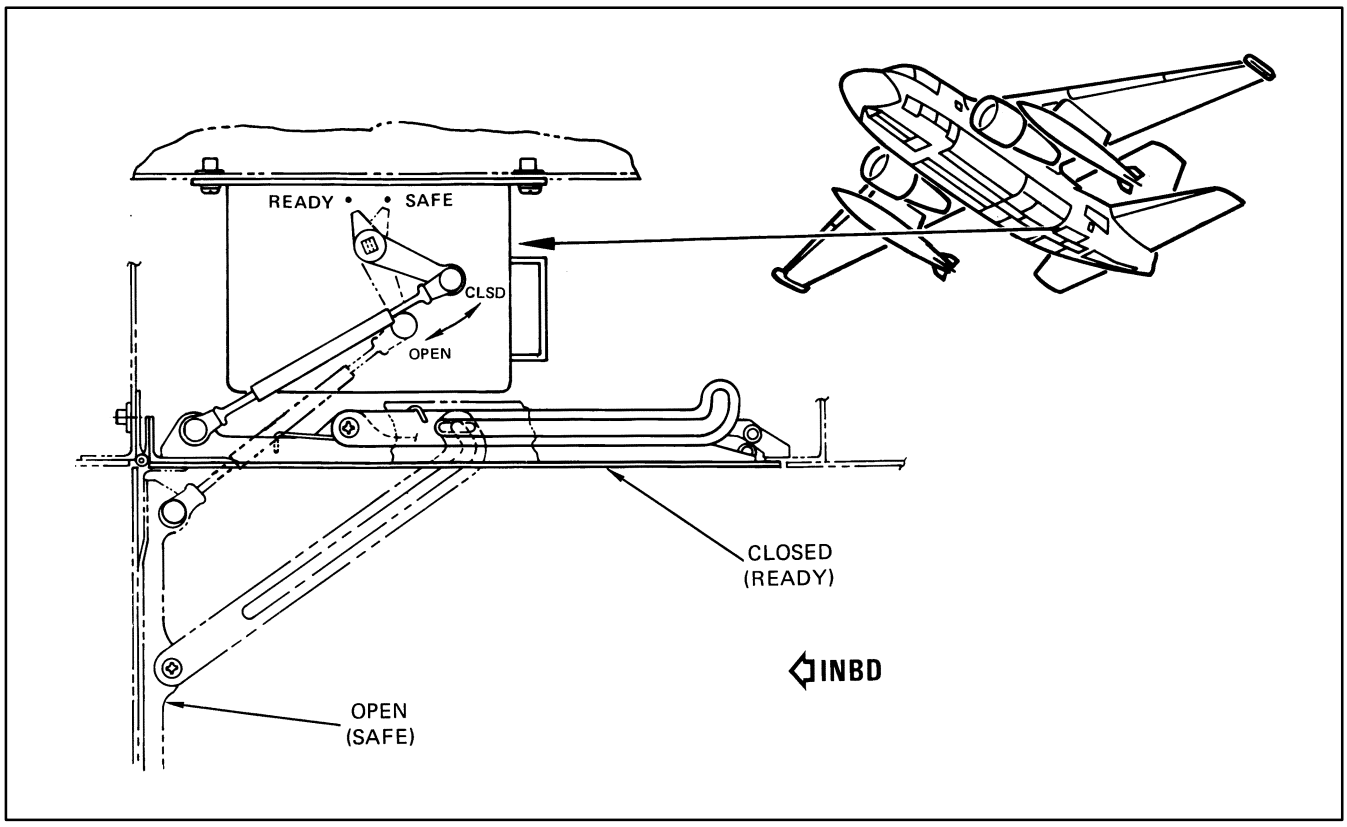

Figure 3-4. Sonobuoy Safety Switch

DESIGNATION	NOMENCLATURE	COMMON TERMINOLOGY	LOCATION
C-8863/ASQ-147	MNL search stores control	Manual search stores control panel	TACCO station
KY-747B/ASQ-l47	Command signals decoder program	Search stores decoder	Environmental control system compartment
SA-18l4/ASQ-147	Sonobuoy safety switch	Sonobuoy safety switch	Lower fuselage (outside)
PP-6664/ASQ-l47	Power supply	Power supply	Left internal bay
None	SONB indicator	Sonobuoy safety switch indicator	Armament control panel
None	SRCH PWR cue lamp	Search power cue lamp	Pilot instrument panel flight station
None	SAR switch	SAR switch	Armament control panel
None	SRCH PWR switch	Search power switch	Pilot left console
None	SAFETY DISABLE SEARCH switch	Search power safety disable switch	Right circuit breaker panel
None	Sonobuoy launcher chutes	Sonobuoy chutes	Aft unpressurized fuselage
None	EXT JETT	External jettison	Left side pilot instrument panel

Figure 3-5. Search Stores Control Components

CONTROL	FUNCTION
AUTO/MAN	Selects AUTO or MAN mode of operation.
CHUTE SEL thumb-wheels	Selects a launch chute for manual testing and release.
TEST	Manually initiates a continuity check of the selected chute.
GO/NO-GO	Displays the results of the continuity check initiated by pressing TEST switch light.
RLSE	Launches the selected store.

Figure 3-6. Manual Search Stores Control Panel Control Functions

Buoys dropped in the manual mode must be operator inserted with the INSERT SONB option select function.

CAUTION

Search stores should not be deployed with the arresting hook lowered. Sonobuoys could deflect off the hook and impact rear lower fuselage.

Note

If a launch chute indicates defective on-line or NO-GO off-line, but a known good store is in place, the store may be released by the following method:

1. Select any chute off-line that will test to an amber RLSE light.
2. Without pressing any other options, reselect the chute with the store desired for release.
3. Press the RLSE light and the desired store may be launched.

3.3.3 Search Stores Emergency Jettison

WARNING

The emergency jettison (EXT JETT) switch is not disabled by the MASTER ARM or SRCH PWR switches.

STEP	OPERATOR ACTION	INDICATION	REMARKS
1	Select MAN on AUTO/MAN switch.	MAN lights amber.	AUTO light goes off.
2	Position CHUTE SEL switches to desired chute.	Visual in windows.	TACCO must ask pilot to activate SRCH PWR switch.
3	TACCO requests pilot to turn on search power.		
4	Pilot switches SRCH PWR to ON.	RLSE switch lights GREEN.	
5	Press TEST switch. If GO proceed to step 6. If NO-GO change chute selection and continue sequence.	GO indicator lights green and RLSE switch changes from green to amber. NO-GO indicator lights white.	The TEST switch checks electrical continuity of the sonobuoy release circuits to the CAD (Cartridge Actuated Device). Chute is unusable.
6	Press RLSE switch.	RLSE switch lights green.	Search store is released. Once the RLSE switch becomes amber it will remain amber even though the TACCO reselects another chute. Depression of the RLSE switch after reselection will release the search store in the chute that is currently selected by the CHUTE SEL thumbwheels. For each reselection the TACCO should press the TEST switch to verify electrical continuity.

Figure 3-7. Procedure for Release of Search Stores (Manual Off-Line Mode)

Emergency jettison of search stores is provided through the external stores EXT JETT switch located on the pilot forward left console (FO-1). All search stores, except the buoy in chute P-2, are jettisoned in a preprogrammed firing sequence in 4 to 7 seconds. Emergency jettison can be accomplished by pressing the EXT JETT switch whenever the aircraft is in a weight-off-wheels condition (real or simulated). The SAFETY DISABLE SAR & JTSN switch located on the right-hinged circuit breaker panel is spring-loaded to the OFF position. When hand-held to DISABLE, weight-on-wheels safety is bypassed and launch power is available. This switch is used by maintenance personnel to verify proper SAR and emergency jettison operation. The SEARCH and KILL SAFETY DISABLE guarded switches are also located on the right-hinged circuit breaker panel. When momentarily placed to the DISABLE position with either MASTER ARM power or SRCH PWR applied, landing gear down safety is bypassed and launch power is available. This switch is used by maintenance personnel for ground testing of the armament system.

WARNING

- When utilizing the SEARCH and KILL SAFETY DISABLE switches, it is possible to release buoys and weapons onto the deck. Ensure that no actual weapons or buoys are loaded before using these switches.

- Emergency jettison of sonobuoys is not available when the decoder programmer, KY-747/ASQ-147 has been removed from the aircraft. Sonobuoys shall not be carried in aircraft not equipped with decoder programmer, KY-747/ ASQ-147, when single-engine gross weight/bingo considerations may require jettison of sonobuoy loads.

Note

- Search stores cannot be emergency jettisoned with stores power and search stores control circuit breakers pulled.

- Simulated weight-off-wheels condition can be accomplished by maintenance personnel for ground test purposes.

3.3.4 Search and Rescue Sonobuoy Release

WARNING

The SAR switch is not disabled by the MASTER ARM or SRCH PWR switches or by pulling the search stores power or search stores control circuit breakers.

Chute P-2 sonobuoy release can only be accomplished when the aircraft is in a weight-off-wheels condition (real or simulated). Chute P-2 sonobuoy is released by pressing the SAR switch located on the ACP (see FO-1) when the SAR switch legend is lighted green. The switch legend goes out when the sonobuoy from chute P-2 is released.

Note

SAR switch legend lights green when the lever at bottom of chute P-2 senses a store in place or a cap over an empty chute.

3.4 SEARCH STORES ON-LINE CONTROL

WARNING

Failure of a search store decoder may cause an inadvertent sonobuoy release. Power to the SESCOS must be removed by pulling the SEARCH STORES POWER and SEARCH STORES CONTROL circuit breakers and leaving the power secured at all times except when actually dropping buoys or when an inadvertent release would not be hazardous.

The automatic mode permits launching, through the computer, of preprogrammed patterns or a single sonobuoy. Stores can be launched automatically by the COTAC, TACCO, or SENSO. The automatic mode of the search stores system automatically:

1. Maintains and updates the SEARCH STORES INVENTORY Tableau.

2. Selects stores for launch.

3. Displays expendable FTPs on the MPD tactical plot.

4. Launches search stores.

5. Displays cues or alerts on the MPD resulting from any malfunctions detected by the search stores system.

Selection of computer functions is accomplished by the operator through the INCOS. Once the operator has selected the desired option(s) from the INCOS functions, the buoys are released under program control when the aircraft captures an expendable FTP.

Power is supplied to the system when the SRCH PWR switch (see FO-1) is activated, the landing gear is up, and the sonobuoy safety switch is closed.

Upon selection of a sonobuoy for release, a functional alert is presented on the pilot display, indicating maximum limits for release of the selected sonobuoy. For multiple buoy selection, the alert with the most restrictive limits is presented on the pilot display.

Note

- All sonobuoy life/depth settings are set prior to loading.

- For optimum search store reliability the SONB MAX speed (KIAS) and altitude alerts advise the pilot not to exceed the parameters displayed. Speeds and altitudes in excess of alert parameters will not prevent search stores release but may interrupt processing.

3.5 SEARCH STORES CONTROL FUNCTIONS

Pressing the SEARCH STORES matrix select switch on the INCOS tray (see FO-9) lights the

SEARCH STORES legend amber, and displays the following search store options at the initiating operator station (COTAC, TACCO, or SENSO).

LOFAR
DIFAR
DICASS
VLAD STR
LOAD
RLSE

Seven option select functions in the search stores system enable the operator to select, prepare, and release sonobuoys and smokes in the automatic mode.

Note

- All sonobuoy life/depth settings are set prior to loading.
- For optimum search store reliability the SONB MAX speed (KIAS) and altitude alerts advise the pilot not to exceed the parameters displayed. Speeds and altitudes in excess of alert parameters will not prevent search stores release, but could cause sonobuoy damage.

3.5.1 Low Frequency Analysis and Recording (LOFAR). Initiates the procedure for selecting a LOFAR sonobuoy for launch. The operator selects buoy life and hydrophone depth via cue response.

3.5.2 Directional Frequency Analysis and Recording (DIFAR). Initiates the procedure for selecting a DIFAR sonobuoy for launch. The operator selects buoy life and hydrophone depth via cue response.

3.5.3 Directional Command Activated Sonobuoy System (DICASS). Initiates the procedure for selecting a DICASS sonobuoy for launch.

3.5.4 SMOKE. Initiates the procedure for selecting a SMOKE for launch. SMOKEs are used for marking targets or sonobuoys during poor visibility conditions. They can be particularly useful during search and rescue operations. The operator selects type (life) via a cue response. The Mk 25 burns for 10 to 20 minutes, while the Mk 58 lasts 45 to 55 minutes.

3.5.5 Vertical Line Array DIFAR (VLAD). Initiates the procedure for selecting a VLAD sonobuoy for launch.

3.5.6 Stores Load (STR LOAD). Allows the COTAC, TACCO, or SENSO to enter or alter parameters in the SEARCH STORES LOAD Tableau.

3.5.7 Release (RLSE). Enables the COTAC, TACCO, or SENSO to launch selected search stores. If more than one buoy is selected for release (up to three can be selected), the program delays 0.2 seconds, then sends a launch signal to the next store.

3.5.8 SEARCH STORES Matrix

TACCO
SENSO
COTAC

SEARCH STORES

PURPOSE:

Displays option select function legends associated with the selection, preparation, and release of search stores.

PREREQUISITES:

None.

PROCEDURES:

1. Press SEARCH STORES (lights amber).

Note

- Search stores legend on COTAC INCOS is SCH STR.
- SCH STR at COTAC station does not light amber when pressed. Legend goes black and matrix C AMPLFY legend appears.
- If the alert CAPACITY EXCD is displayed, 40 local stores are in the system and the selected function is deactivated.

a. SEARCH STORES option select function legends are displayed in the matrix B option select switches.

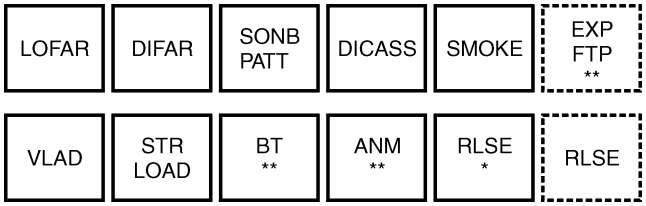

Note

*Blank for COTAC switches.
**BLACKLIT and unavailable.

DEACTIVATION:

1. SEARCH STORES matrix B is deactivated when another matrix select switch is pressed.

2. Deactivation results:

   a. SEARCH STORES option select function legends are replaced by option select function legends associated with another matrix select.

   b. SEARCH STORES changes from amber to green or black.

3.5.8.1 LOFAR Option

TACCO
SENSO
COTAC

SEARCH STORES

PURPOSE:

Selects a LOFAR sonobuoy for release.

PREREQUISITES:

1. SEARCH STORES/SCH STR matrix is active.

2. AUTO/MAN switch is in the AUTO position.

3. Fewer than three store selection functions are active.

4. No stores selection cueing process is active.

5. A LOFAR sonobuoy is available.

6. SONB PATT function is not active.

PROCEDURES:

1. Press LOFAR (lights amber).

   a. STR LOAD function switch remains green.

   b. All unselected SEARCH STORES function switches change to black at the COTAC, TACCO, and SENSO stations.

   c. If the AUTO/MAN switch is in the MAN position, the SEARCH STORES LOAD Tableau displays an E in the D column for every SLC.

   d. If no alert appears, the following cue appears:

      SEL DEPTH
      1 SHALLOW — 60FT
      2 MEDIUM — 300 FT
      3 DEEP — 1000 FT

2. Respond to the SEL DEPTH cue.

   a. Press a numeric on the keyset to select the desired depth.

3. Press ENTER.

   a. If no alert appears, the following cue appears:

      SEL LIFE
      1 1 HOUR
      2 3 HOURS
      3 8 HOURS

4. Respond to the SEL LIFE cue.

   a. Press numerics on the keyset to select the desired life.

5. Press ENTER.

   a. If no alert appears, the following cue appears (a suggested RF may be displayed):

      ENT RF
      XX

Note

- The program will search for an unreserved store of the requested type having the requested life/depth settings, valid

SLC continuity, and not having the same RF as a buoy in the water. If no buoy is found, the program shall search for one meeting the above requirements but with the same RF as a buoy in the water.

- If, in either case, a buoy is found, the RF of the sonobuoy shall be displayed as the suggested entry. When no sonobuoy is found, the ENT RF cue shall be redisplayed with no suggested entry, and the SEARCH STORES LOAD Tableau is displayed.

6. Respond to the ENT RF cue.

   a. If a suggested RF is displayed and accepted, proceed to step 7.

   b. If the suggested RF is not accepted, or no suggested RF is displayed, press the appropriate numbers on the keyset to enter the desired RF.

7. Press ENTER.

   a. If no alert appears on the activating operator's MPD and the SRCH PWR switch at the pilot station is ON:

      (1) SEARCH STORES function switches that are available change from black to green.

Note

If this selection is the third store selected for release, no function switches become available.

      (2) The following alert appears on the pilot display:

SONB MAX 250 KT-10K

Note

- For optimum search store reliability the SONB MAX speed (KIAS) and altitude alerts advise the pilot not to exceed the parameters displayed. Speeds and altitudes in excess of alert parameters will not prevent search stores release and processing.

- KT = Knots Indicated Air Speed (KIAS).

      (3) RLSE lights amber.

         (a) Sonobuoy is ready for release.

   b. If the SRCH PWR switch at the pilot station is OFF:

      (1) The SRCH PWR cue lamp lights.

Note

SRCH PWR cue lamp advises the pilot to change the SRCH PWR switch to the ON position.

      (2) The following alert appears on the pilot display:

TURN ON SRCH PWR

      (3) The following alert appears on the activating operator's MPD:

SRCH PWR OFF

8. Pilot switches SRCH PWR switch to ON.

   a. Events in step 7a are repeated.

   b. If the following cue appears:

RESERVED SLC
1 ACCEPT
2 RESELECT

      (1) The selected sonobuoy in step 6 is located in a reserved SLC.

      (2) A numeric 1 (ACCEPT) entry continues to process the buoy for launch.

      (3) A numeric 2 (RESELECT) entry displays the SEARCH STORES LOAD Tableau and the ENT RF cue with no suggested entry. Repeat step 6.

DEACTIVATION:

1. LOFAR is deactivated when one of the following occurs:

   a. AUTO/MAN switch is changed to the MAN position.

   b. The selected LOFAR sonobuoy is released.

c. LOFAR is pressed when amber.

d. Another function is activated that requires the use of the cueing area before completion of a LOFAR function.

e. A buoy is released which causes the system capacity of buoys in the water to be exceeded.

2. Deactivation results:

a. LOFAR changes from amber to green.

b. All other SEARCH STORES function switches change from black to green.

c. A selected LOFAR buoy has been selected.

d. LOFAR select cues are removed.

3.5.8.2 DIFAR Option

TACCO
SENSO
COTAC

SEARCH STORES

PURPOSE:

Selects a DIFAR sonobuoy for release.

PREREQUISITES:

1. SEARCH STORES/SCH STR matrix is active.
2. AUTO/MAN switch is in the AUTO position.
3. Fewer than three store selection functions are active.
4. No stores selection cueing process is active.
5. A DIFAR sonobuoy is available.
6. SONB PATT function is not active.

PROCEDURES:

1. Press DIFAR (lights amber).

a. STR LOAD function switch remains green.

b. All unselected SEARCH STORES function switches change to black at the COTAC, TACCO, and SENSO stations.

c. If the AUTO/MAN switch is in the MAN position, the SEARCH STORES LOAD Tableau displays an E in the D column for every SLC.

d. If no alert appears, the following cue appears:

SEL DIFAR
1 53B
2 53D

2. Respond to the SEL DIFAR cue.

a. Press the numerics in the keyset to select the desired DIFAR buoy.

3. Press ENTER.

a. If operator response is valid, program will check for availability of selected DIFAR buoy. If none available, the keyset alert NOT AVAIL will be displayed and the SEL DIFAR cue will be redisplayed. If a DIFAR buoy is found, program will then display the following SEL DEPTH cue:

SEL DEPTH
1 SHALLOW — 90FT
2 MEDIUM — 400 FT
3 DEEP — 1000 FT

4. Respond to the SEL DEPTH cue.

a. Press the numeric or the keyset to select the desired depth.

5. Press ENTER.

a. If no alert appears, the appropriate SEL LIFE cue then appears.

For the 53B the life cue is:

SEL LIFE
1 1 HOUR
2 3 HOURS
3 8 HOURS

For the 53D the life cue is:

SEL LIFE
1 H 0.5 HOUR
2 1 HOUR
3 2 HOURS
4 4 HOURS

6. Respond to the SEL LIFE cue.

   a. Press the numerics on the keyset to select the desired life.

7. Press ENTER.

   a. If no alert appears, the following cue appears (a suggested RF may be displayed):

      ENT RF XX

Note

- The program will search for an unreserved store of the requested type having the requested life/depth settings, valid SLC continuity, and not having the same RF as a buoy in the water. If no buoy is found, the program shall search for one meeting the above requirements but with the same RF as a buoy in the water.

- If, in either case, a buoy is found, the RF of the sonobuoy shall be displayed as the suggested entry. When no sonobuoy is found, the ENT RF cue shall be redisplayed with no suggested entry, and the SEARCH STORES LOAD Tableau is displayed.

8. Respond to the ENT RF cue.

   a. If a suggested entry is displayed and accepted, proceed to step 9.

   b. If the suggested RF is not accepted, or no suggested RF is displayed, press numbers on the keyset to enter the desired RF.

9. Press ENTER.

   a. If no alert appears on the activating operator's MPD and the SRCH PWR switch at the pilot station is ON.

      (1) SEARCH STORES function switches that are available change from black to green.

Note

If this selection is the third store selected for release, no function switches will become available.

      (2) The following alert appears on the pilot display:

          SONB MAX 300 KT-20K

Note

- For optimum search store reliability the SONB MAX speed (KIAS) and altitude alerts advise the pilot not to exceed the parameters displayed. Speeds and altitudes in excess of alert parameters will not prevent search stores release and processing.

- KT = Knots Indicated Air Speed (KIAS).

      (3) RLSE lights amber.

          (a) Sonobuoy is ready for release.

      (4) If the SRCH PWR switch at the pilot station is OFF:

          (a) The SRCH PWR cue lamp lights.

Note

SRCH PWR cue lamp advises the pilot to change the SRCH PWR switch to the ON position.

          (b) The following alert appears on the pilot display:

              TURN ON SRCH PWR

          (c) The following alert appears on the activating operator's MPD:

              SRCH PWR OFF

10. Pilot switches the SRCH PWR switch to ON.

    a. Events in step 7a are repeated.

b. If the following cue appears:

RESERVED SLC
1 ACCEPT
2 RESELECT

(1) The channel selected in step 8 is located in a reserved SLC.

(2) A numeric 1 (ACCEPT) entry continues to process the buoy for launch.

(3) A numeric 2 (RESELECT) entry displays the SEARCH STORES LOAD Tableau and the ENT RF cue with no suggested entry. Repeat step 8.

DEACTIVATION:

1. DIFAR is deactivated when one of the following occurs:

   a. AUTO/MAN switch is changed to MAN.

   b. Selected DIFAR sonobuoy is released.

   c. DIFAR is pressed when amber.

   d. Another function is activated that requires the use of the cueing area before completion of DIFAR cues.

   e. A buoy is released which causes system capacity of buoys in the water to be exceeded.

2. Deactivation results:

   a. DIFAR changes from amber to green.

   b. All other SEARCH STORES function switches change from black to green.

   c. If a DIFAR buoy has been selected for release, it is deselected.

   d. SONO launch restriction cue is removed.

3.5.8.3 SONB PATT Option

TACCO
SENSO
COTAC

SEARCH STORES

PURPOSE:

Allows the operator to enter a pattern of expendable FTPs and to select a sonobuoy to drop at each FTP.

PREREQUISITES:

1. SEARCH STORES matrix is active.
2. No buoys have been selected for release.

PROCEDURE:

1. Respond to the cues regarding the quantity (2 through 6), store type (41, 53, 62, or 77), store attributes (RF, depth, and life). Expected cues for each type of sonobuoy is contained in the option description in the SEARCH STORES matrix.

Note

- The maximum quantity that may be selected is limited by the number of FTPs in the system. The number of FTPs in the system (all types) plus the quantity selected cannot exceed 10.
- The maximum quantity that may be selected is limited by the number of sonobuoys in the system. The number of sonobuoys in the system plus the quantity selected cannot exceed 40.
- Selection sequence may suggest duplicate RFs when mixed search stores are being selected.
- If any ARM/ORD reinitialization is performed during the sonobuoy selection sequence, it is possible to hang up the reinitialization; i.e., the ARM/ORD REINIT switch will remain illuminated amber indefinitely. This situation may be corrected by reinitializing SESCOS via the SYSTEM STATUS Tableau.

2. When all stores selections are completed, the following cue appears:

HOOK FIRST POINT

3. Hook the desired release point.

4. Press ENTER.

   a. The following cue appears:

      ENTER BEARING-DEG
      - - -
      OPTNL

   b. If designated FTP steering is desired, proceed to step 5.

   c. If undesignated FTP steering is desired, proceed to step 6.

5. Enter the bearing on the keyset and press ENTER.

   a. A designated expendable FTP is displayed at the hooked point.

6. Press SKIP CUE.

   a. An undesignated expendable FTP is displayed at the hooked point.

7. The following cue appears:

   HOOK NEXT POINT

   a. Repeat procedures in steps 3 through 6.

   b. Upon valid response, the HOOK NEXT PONT cue is redisplayed until the number of FTPs specified in the ENT QTY cue have been satisfied.

Note

The minimum spacing allowed between two consecutive hooked points is 500 yards.

8. Upon completion of the cueing sequence, the RLSE switch in the search stores matrix becomes available (amber). Pressing the RLSE switch will deploy the sonobuoy assigned to the expendable FTP 1, remove the associated FTP symbol from the display, reassign the remaining FTP priorities, call steering to compute the flightpath to the new expendable FTP 1, and reactivate the RLSE function.

Note

- When laying closely spaced sonobuoys with the SONB PATT function and active computer steering, there may be unnecessary maneuvers if other than the first FTP selected is designated.
- Expendable FTPs entered by this function are neither clearable nor destroyable. The FTPs may only be removed by deactivation of SONB PATT, capture, or pressing the RLSE switch on the SRCH STRS matrix.

DEACTIVATION:

1. SONB PATT is deactivated when one of the following occurs:

   a. All specified FTPs have been captured.

   b. All selected sonobuoys have been deployed through the RLSE function.

   c. SONB PATT is pressed when amber.

   d. The search stores system is reinitialized.

2. Deactivation results:

   a. SONB PATT changes from amber to green.

   b. Remaining expendable FTPs are destroyed.

3.5.8.4 DICASS Option

TACCO
SENSO
COTAC

SEARCH STORES

PURPOSE:

Initiates the procedure for selecting a DICASS buoy for release.

PREREQUISITES:

1. SEARCH STORES/SCH STR matrix is active.
2. AUTO/MAN switch is in the AUTO position.
3. Fewer than three store selection functions are active.
4. No store selection cueing process is active.

5. A DICASS sonobuoy is available.

6. SONB PATT function is not active.

PROCEDURES:

1. Press DICASS (lights amber).

   a. STR LOAD function switches remains green.

   b. All unselected SEARCH STORES function switches change to black at the COTAC, TACCO, and SENSO stations.

   c. If the AUTO/MAN switch is in the MAN position, the SEARCH STORES LOAD Tableau displays an E in the D column for every SLC.

   d. If no alert appears, the following cue appears:

      SEL CMD DEPTH
      1 62B
      2 62C — DEEP
      3 62B — EXTENDED

2. Respond to the SEL CMD DEPTH cue.

   a. Press numerics on the keyset to select the desired depth.

3. Press ENTER.

   a. If no alert appears, the following cue appears (a suggested RF may be displayed).

      ENT RF XX

Note

- The program will search for an unreserved store of the requested type having the requested life/depth settings, valid SLC continuity, and not having the same RF as a buoy in the water. If no buoy is found, the program shall search for one meeting the above requirements but with the same RF as a buoy in the water.

- If, in either case, a buoy is found, the RF of the sonobuoy shall be displayed as the suggested entry. When no sonobuoy is found, the ENT RF cue shall be redisplayed with no suggested entry, and the SEARCH STORES LOAD Tableau is displayed.

4. Respond to the ENT RF cue.

   a. If the suggested entry is displayed and selected, proceed to step 5.

   b. If the suggested RF is not accepted, or no suggested RF is displayed, press numbers on the keyset to enter the desired RF.

5. Press ENTER.

   a. If no alert appears on the activating operator's MPD and the SRCH PWR switch at the pilot station is ON:

      (1) SEARCH STORES function switches that are available change from black to green.

Note

If this selection is the third store selected for release, no function switches will become available.

      (2) The following alert appears on the pilot display:

      SONB MAX 250 KT-20K

Note

- For optimum search store reliability the SONB MAX speed (KIAS) and altitude alerts advise the pilot not to exceed the parameters displayed. Speeds and altitudes in excess of alert parameters will not prevent search stores release and processing.

- KT = Knots Indicated Air Speed (KIAS).

      (3) RLSE lights amber.

         (a) Sonobuoy is ready for release.

   b. If the SRCH PWR switch at the pilot station is OFF:

      (1) The SRCH PWR cue lamp lights.

Note

SRCH PWR cue lamp advises the pilot to change the SRCH PWR switch to the ON position.

(2) The following alert appears on the pilot display.

TURN ON SRCH PWR

(3) The following alert appears on the activating operator's MPD:

SRCH PWR OFF

6. Pilot switches the SRCH PWR switch to ON:

   a. Events in step 5a are repeated.

   b. If the following cue appears:

   RESERVED SLC
   1 ACCEPT
   2 RESELECT

   (1) The selected sonobuoy in step 4 is located in a reserved SLC.

   (2) A numeric 1 (ACCEPT) entry continues to process the buoy for launch.

   (3) A numeric 2 (RESELECT) entry displays the SEARCH STORES LOAD Tableau, and the ENT RF cue with no suggested entry. Repeat step 4.

DEACTIVATION:

1. DICASS is deactivated when one of the following occurs:

   a. AUTO/MAN switch is changed to the MAN position.

   b. The selected DICASS sonobuoy is released.

   c. DICASS is pressed when amber.

   d. Another function is activated that requires the use of the cueing area before completion of a DICASS function.

   e. A buoy is released which causes system capacity of buoys in the water to be exceeded.

2. Deactivation results:

   a. DICASS changes from amber to green.

   b. All other SEARCH STORES function switches change from black to green.

   c. A DICASS buoy is deselected if it has been selected for release.

   d. Any DICASS select cues are removed.

3.5.8.5 SMOKE Option

TACCO
SENSO
COTAC

SEARCH STORES

PURPOSE:

Selects a smoke for release.

PREREQUISITES:

1. SEARCH STORES/SCH STR matrix is active.
2. AUTO/MAN switch is in the AUTO position.
3. Fewer than three store selection functions are active.
4. No store selection function is in process.
5. A smoke store is available.
6. SONB PATT function is not active.

PROCEDURES:

1. Press SMOKE (lights amber).

   a. STR LOAD function switch remains green.

   b. All unselected SEARCH STORES function switches change to black at the COTAC, TACCO, and SENSO stations.

   c. If the AUTO/MAN switch is in the MAN position, the SEARCH STORES LOAD Tableau displays an E in the D column for every SLC.

d. The following cue appears on the activating operator's MPD:

SEL TYPE
1 K58
2 K25

Note

- Mk 58 burns 45 to 55 minutes.
- Mk 25 burns 10 to 20 minutes.

2. Respond to the SEL TYPE cue.

   a. Press a numeric on the keyset to select the desired smoke.

3. Press ENTER.

Note

The SESCOS subprogram ignores the reserved status of SLCs containing SUS or Smokes and allows the reserved SLCs to be selected and released without answering special cuing.

   a. If no alert appears on the activating operator's MPD and the SRCH PWR switch at the pilot station is ON:

      (1) SEARCH STORES function switches that are available change from black to green.

Note

If this selection is the third store selected for release, no function switches will become available.

      (2) RLSE lights amber.

         (a) SMOKE is ready for release.

   b. If the SRCH PWR switch at the pilot station is OFF:

      (1) The SRCH PWR cue lamp lights.

Note

SRCH PWR cue lamp advises the pilot to change the SRCH PWR switch to the ON position.

      (2) The following alert appears on the pilot display:

TURN ON SRCH PWR

      (3) The following alert appears on the activating operator's MPD:

SRCH PWR OFF

4. Pilot switches the SRCH PWR switch to ON:

   a. Events in step 3a are repeated.

DEACTIVATION:

1. SMOKE is deactivated when one of the following occurs:

   a. AUTO/MAN switch is changed to the MAN position.

   b. The selected smoke is released.

   c. SMOKE switch is pressed when amber.

   d. Another function is activated requiring the use of the cueing area.

2. Deactivation results:

   a. SMOKE changes from amber to green.

   b. All other SEARCH STORES function switches that are black change to green.

   c. Any smoke selected for release is deselected.

3.5.8.6 VLAD Option

TACCO
SENSO
COTAC

SEARCH STORES

PURPOSE:

Selects a VLAD sonobuoy for release.

PREREQUISITES:

1. SEARCH STORES/SCH STR matrix is active.
2. AUTO/MAN switch is in the AUTO position.

3. Fewer than three store selection functions are active.

4. No store selection cueing process is active.

5. A VLAD sonobuoy is available.

6. SONB PATT function is not active.

PROCEDURES:

1. Press VLAD (lights amber).

   a. STR LOAD function switch remains green.

   b. All unselected SEARCH STORES function switches change to black at the COTAC, TACCO, and SENSO stations.

   c. If the AUTO/MAN switch is in the MAN position, the SEARCH STORES LOAD Tableau displays an E in the D column for every SLC.

   d. If release of the desired store will exceed 40 sonobuoys in the water, the following alert will appear:

      CAPACITY EXCD

   e. If no alert appears, the following cue appears:

      SEL LIFE
      1 77A
      2 77B

2. Respond to the SEL VLAD cue:

   a. Press a number on the keyset to select the desired VLAD buoy.

3. Press ENTER.

   a. If no alert appears, the following cue appears for the 77B only:

      SEL BB OR CZ
      1 BB
      2 CZ

4. If SEL BB or CZ cue displayed:

   a. Press a number on the keyset to select BB or CZ.

5. Press ENTER.

   a. If no alert appears and a 77B was selected, the following cue appears (If 77A selected, the following cue is not displayed and depth is 1000 ft.):

      SEL DEPTH
      1 MEDIUM — 500 FT.
      1 DEEP — 1000 FT.

6. Respond to SEL DEPTH cue:

   a. Press a number on the keyset to select the desired depth.

7. Press ENTER.

   a. If no alert appears and a 77A was selected the following cue appears:

      SEL LIFE
      1 1 HOUR
      2 4 HOURS
      3 8 HOURS

   b. If 77B was selected the following cue appears:

      SEL LIFE
      1 H .5 HOUR
      2 1 HOUR
      3 2 HOURS
      4 4 HOURS
      5 8 HOURS

8. Respond to whichever SEL LIFE cue is displayed:

   a. Press a number on the keyset to select the desired life.

9. Press ENTER.

   a. If no alert appears, the following cue appears (a suggested RF may be displayed):

      ENT RF

      XX

Note

- The program will search for an unreserved store of the requested type having the requested life setting, valid SLC continuity, and not having the same RF as a buoy in the water. For a 77B, program will also search for a valid depth and BB or CZ setting. If no buoy is found, the program shall search for one meeting the above requirements but with the same RF as a buoy in the water.

- If, in either case, a buoy is found, the RF on the sonobuoy shall be displayed as the suggested entry. When no sonobuoy is found, the ENT RF cue shall be redisplayed with no suggested entry, and the SEARCH STORES LOAD Tableau is displayed.

10. Respond to the ENT RF cue.

    a. If the suggested entry is displayed and accepted, proceed to step 11.

    b. If the suggested RF is not accepted or no suggested RF is displayed, press numbers on keyset to enter the desired RF.

11. Press ENTER.

    a. If no alert appears on the activating operator's MPD and the SRCH PWR switch at the pilot station is ON:

        (1) SEARCH STORES function switches that are available change from black to green.

Note

If this selection is the third store selected for release, no function switches will become available.

        (2) The following alert appears on pilot display:

            SONB MAX 300 KT-20K

Note

- For optimum search store reliability the SONB MAX speed (KIAS) and altitude alerts advise the pilot not to exceed the parameters displayed. Speeds and altitudes in excess of alert parameters will not prevent search stores release and processing.

- KT = Knots Indicated Air Speed (KIAS).

        (3) RLSE lights amber.

            (a) Sonobuoy is ready for release.

    b. If the SRCH PWR switch at the pilot station is OFF:

        (1) The SRCH PWR cue lamp lights.

Note

SRCH PWR cue lamp advises the pilot to change the SRCH PWR switch to the ON position.

        (2) The following alert appears on the pilot display:

            TURN ON SRCH PWR

        (3) The following alert appears on the activating operator's MPD:

            SRCH PWR OFF

12. Pilot switches the SRCH PWR switch to ON.

    a. Events in step 11a are repeated.

    b. If the following cue appears:

        RESERVED SLC
        1 ACCEPT
        2 RESELECT

        (1) The channel selected in step 10 is located in a reserved SLC.

        (2) A numeric 1 (ACCEPT) entry continues to process the buoy for launch.

        (3) A numeric 2 (RESELECT) entry displays the SEARCH STORES LOAD Tableau and the ENT RF cue with no suggested entry. Repeat step 10.

DEACTIVATION:

1. VLAD is deactivated when one of the following occurs:

   a. AUTO/MAN switch is changed to MAN.

   b. Selected VLAD sonobuoy is released.

   c. VLAD is pressed when amber.

   d. Another function is activated that requires the use of the cueing area.

3.5.8.7 STR LOAD Option

TACCO
SENSO
COTAC

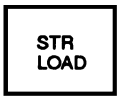

SEARCH STORES

PURPOSE:

Allows the operator to enter or alter stores listed in the SEARCH STORES LOAD Tableau.

PREREQUISITES:

1. SEARCH STORES/SCH STR matrix is active.

PROCEDURES:

1. Press STR LOAD (lights amber).

   a. The following cue appears:

      ENT LINE NUM
      XX

2. Respond to the ENT LINE NUM cue.

   a. Enter the tableau line number to be modified.

3. Press ENTER.

   a. One of the following two cues appear:

      ENT STORE TYPE
      XX

      or

      ENT STORE TYPE

      _ _

4. Respond to the ENT STORE TYPE cue.

   a. If entry is a sonobuoy, accept or enter store type of 41, 53, 62, or 77. Proceed to step 5.

   b. If entry is a SMOKE, accept or enter store type of 25 or 58. Proceed to step 13.

   c. If entry is an SUS, accept or enter store type of 84. Proceed to step 16.

5. Press ENTER.

   a. Upon a valid response to ENT STORE TYPE cue, the appropriate cue of SEL DICASS, SEL DIFAR, or SEL VLAD will be displayed to select the proper letter designator of the buoy. The SSQ-25, 41, 58, and 84 have no letter designator.

   b. Press a number on the keyset to select the desired sonobuoy letter designator.

   c. Press ENTER.

   d. The following cue appears (a suggested RF may be displayed):

      ENT RF
      XX

6. Respond to the ENT RF cue.

   a. If suggested entry is displayed and accepted, proceed to step 7.

b. If suggested entry is not accepted or no suggested RF is displayed, press numerics on the keyset to enter the desired RF.

Valid RFs are as follows:

SSQ-41	1 – 31
SSQ-53B	1 – 99
SSQ-53D	1 – 99
SSQ-62B	1 – 31
SSQ-62C	1 – 99
SSQ-77A	1 – 99
SSQ-77B	1 – 99

7. Press ENTER.

a. If a LOFAR (41) was selected, the following cue appears:

SEL DEPTH
1 SHALLOW — 60 FT
2 MEDIUM — 300 FT
3 DEEP — 1000 FT

Press numerics on the keyset for desired depths and press ENTER.

b. If a DIFAR (53B or D) was selected, the following cue appears:

SEL DEPTH
1 SHALLOW — 90 FT
2 MEDIUM — 400 FT
3 DEEP — 1000 FT

Press numerics on the keyset for desired depth and press ENTER.

c. If a VLAD (77B) was selected, the following cue appears:

SEL DEPTH
1 MEDIUM — 500 FT
2 DEEP — 1000 FT

Press numerics on the keyset for desired depth and press ENTER.

8. Following 7a, 7b, or 7c, the appropriate select life cue will appear.

a. If a LOFAR (41), or DIFAR (53B) was selected, the following cue appears:

SEL LIFE
1 1 HOUR
2 3 HOURS
3 8 HOURS

Press numerics on the keyset for desired life and press ENTER.

b. If a DIFAR (53D) or VLAD (77B) was selected, the following cue appears:

SEL LIFE
1 H .5 HOUR
2 1 HOUR
3 2 HOURS
4 4 HOURS
5 8 HOURS

Press numerics on the keyset for desired life and press ENTER.

c. If a VLAD (77B) was selected, the following cue appears:

SEL BB OR CZ
1 BB
2 CZ

Press numerics on the keyset for desired BB or CZ and press ENTER.

d. If a VLAD (77A) was selected, the program assigns a deep setting of 1000 feet and the following cue appears:

SEL LIFE
1 1 HOUR
2 4 HOURS
3 8 HOURS

Press numerics on the keyset for desired life and press ENTER.

9. If a DICASS (62) was selected, the following cue appears:

SEL DICASS
1 62B
2 62C — DEEP
3 62C — EXTENDED

Press numerics on the keyset for desired life and press ENTER.

10. Press ENTER.

    a. Proceed to step 11a.

11. Press ENTER.

    a. The following cue appears:

```
 SEL RESERVE IND
1 RESERVE
2 BLANK
–
      OPTNL
```

12. Respond to SEL RESERVE IND cue.

    a. Decision 1 reserves the SLC.

    b. Decision 2 eliminates the existing reserved SLC.

13. Press ENTER.

    a. Return to step 1a.

14. Press ENTER.

    a. The following cue appears:

```
 SEL TYPE
1 S84-1
2 S84-2
3 S84-3
4 S84-4
```

15. Respond to the SEL TYPE cue.

16. Press ENTER.

    a. Return to step 1a.

DEACTIVATION:

1. STR LOAD is deactivated when one of the following occurs:

    a. STR LOAD is pressed when amber.

    b. Another function is activated that requires the use of the cueing area before completion of STR LOAD function.

2. Deactivation result:

    a. STR LOAD changes from amber to green.

Note

- SESCOS must be reinitialized before the computer can accept a modified load. Reinitialization occurs when the AUTO/MAN switch on the manual search stores control panel is cycled to AUTO, when ARM/ORD in the REINIT matrix is depressed, or when SESCOS in the SYSTEM STATUS Tableau is reinitialized. When using the manual search stores control panel, wait 3 seconds before reselecting AUTO.

- Mk 84 SUS is entered into the system through the SEARCH STORES LOAD Tableau but is selected in the kill stores matrix. The pilot must turn on search power to release. The release option in the search stores matrix (not the kill stores) will manually release the SUS. In addition, the SUS is dropped with an EXP FTP (not a weapon FTP).

3.5.8.8 RLSE Option

TACCO
SENSO
COTAC

SEARCH STORES

PURPOSE:

Allows the COTAC, TACCO, or SENSO to launch a selected search store.

PREREQUISITES:

1. SEARCH STORES/SCH STR matrix is active.
2. AUTO/MAN switch is in the AUTO position.
3. SRCH PWR switch is ON.
4. A search store is prepared for release.
5. For automatic release: an expendable FTP is entered on the MPD.

CAUTION

Search stores should not be deployed with the arresting hook lowered. Sonobuoys could deflect off the hook and impact the rear lower fuselage.

1. For manual release, proceed to step 3.

2. For automatic release, at an expendable FTP, proceed to step 4.

3. Press RLSE.

   a. If no alert appears, the following occurs:

      (1) The selected sonobuoy is released.

      (2) The SEARCH STORE INVENTORY Tableau is updated.

      (3) The applicable option select switch changes from amber to green, or if the SONB PATT function is active, FTP E1 is removed from displays and remaining expendable FTPs, if any, are renumbered sequentially. If none remain, the SONB PATT function is deactivated.

      (4) The sonobuoy symbol appears at the splash point on the MPD at 2,000 feet and below. Above 2,000 feet, the symbol is displayed at the release point.

   b. If the following alert appears:

      ZZZZ SLC XX NO RLS

Note

- ZZZZ represents time.
- XX represents the sonobuoy launch chute number.

      (1) The selected sonobuoy at the specified SLC was not released.

      (2) A D is placed in the defect column of the SEARCH STORES INVENTORY Tableau for the appropriate SLC.

4. Automatic release —Aircraft captures an expendable FTP.

   a. If no alert appears, the following occurs:

      (1) The selected sonobuoy is released.

      (2) The SEARCH STORES INVENTORY Tableau is updated.

      (3) FTP E1 is removed from displays and remaining EXP FTPs, if any, are renumbered sequentially. If none remain, the SONB PATT function is deactivated.

      (4) The sonobuoy symbol appears at the splash point on the MPD at 2,000 feet and below. Above 2,000 feet, the symbol is displayed at the release point.

Note

- If two or more stores are selected, the second and succeeding releases follow at 0.2-second intervals.
- If additional stores remain on SONB PATT option, the RLSE light will recycle to amber.

   b. If the following alert appears:

      ZZZZ SLC XX NO RLS

      (1) The selected sonobuoy at the specified SLC was not released.

      (2) A D is placed in the defect column of the SEARCH STORES INVENTORY Tableau for the appropriate SLC.

3.6 KILL STORES

3.6.1 Introduction. Kill stores are carried on the aircraft at four bomb bay stations (B1, B2, B3, and B4), and two wing stations (W5 and W6). Each wing station can carry either one store at each station or a cluster of three stores at each station using a TER.

3.6.2 Bomb Bay Stations. The aircraft has two bomb bays, one on each side of the aircraft centerline forward of the main landing gear wheel wells. Each bomb bay has two BRU-14/A bomb racks. Figure 3-8 shows the release sequence for the bomb bay stations. The overall release sequence depends on the operator selection of the weapon to be released. For example, if torpedoes are loaded at stations 3 and 4 and bombs at stations 1 and 2, and a torpedo is the first weapon to be selected for release in AUTO mode, the torpedo at station 4 releases first.

Note

- The on-line release sequence is determined by weapon selection such that the selected stations are dropped in the following order of decreasing down range travel: bomb bays, wings with TERS, wings with single stores. Detailed release sequences are provided in the S-3B TACMAN, NWP 3-22.5-S3B, Vol. II Appendix A.

- Bomb bay stores shall not be released with the FLIR turret extended.

3.6.2.1 TORP PRESET SWITCH. The TORP PRESET switch, located on the right hinged circuit breaker panel, removes power from the bomb bay stations during loading evolutions. No ordnance may be dropped from the bomb bay with the TORP PRESET switch in the OFF position. Switch status is shown on the TORP PWR light located above the TACCO station.

Note

The TORP PRESET switch must be in the ON position for on-line selection of any kill stores, including wing stations. With the TORP PRESET switch to OFF, ARMCOS is defective in system status, and will not reinitialize, preventing the on-line selection, arming, and release of any ordnance.

3.6.3 Bomb Bay Doors. There are two bomb bay doors for each bomb bay. Operation of the doors can be controlled at either the ACP or at the bomb bay. Hydraulic and electric motors simultaneously power the four doors during normal operation, completing operation from closed to open, or open to closed, in approximately 6 seconds. If either motor fails, the other continues to operate the doors with the operating time approximately doubled.

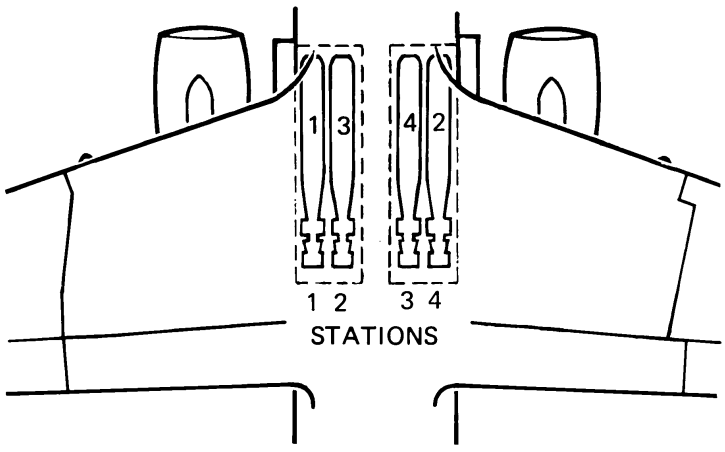

NOTE

1 RELEASE SEQUENCE APPLIES IF ALL STATIONS SELECTED HAVE SIMILAR WEAPONS.

2 IF STATIONS ARE SELECTED SIMULTANEOUSLY, ONE WEAPON WILL BE DROPPED IN THE NORMAL RELEASE SEQUENCE ON EACH ACTUATION OF THE STORES SWITCH.

S3AAB1.1-F0406

Figure 3-8. Bomb Bay Designation and Release Sequence

Normal operation of the doors is controlled by the pilot or COTAC using the DOORS OPEN/TRANS switch located on the ACP. Pressing the switch alternately opens the four bomb bay doors or closes them. The EMER DOOR switch on the ACP overrides normal door control. Operation will interrupt or reverse a normal door control switch command.

WARNING

Do not press the DOORS OPEN/TRANS switch on the ACP when the bomb bay doors ground control panel door is open. Pressing the DOORS OPEN/TRANS switch inserts the command into memory, and causes the bomb bay doors to open or close when the bomb bay doors ground control panel is closed, provided aircraft power is not disrupted.

3.6.3.1 Bomb Bay Doors Ground Control Panel. The bomb bay doors ground control panel is located in an access immediately forward of the left bomb bay. The panel contains an electric door control switch, a brake, a hand crank receptacle, and provisions for a safety pin (see Figure 3-9). When the access door is open and the landing gear control handle is down, the bomb bay doors cannot be closed by the door controls at the flight station.

The electric door control switch is used during ground operations (such as loading). It is a three-position toggle switch with the following positions:

1. OPEN — Turns on the electric motor to drive the four bomb bay doors to the load (extreme) open position.

2. CLOSE — Turns on the electric motor to drive the four bomb bay doors to the closed position.

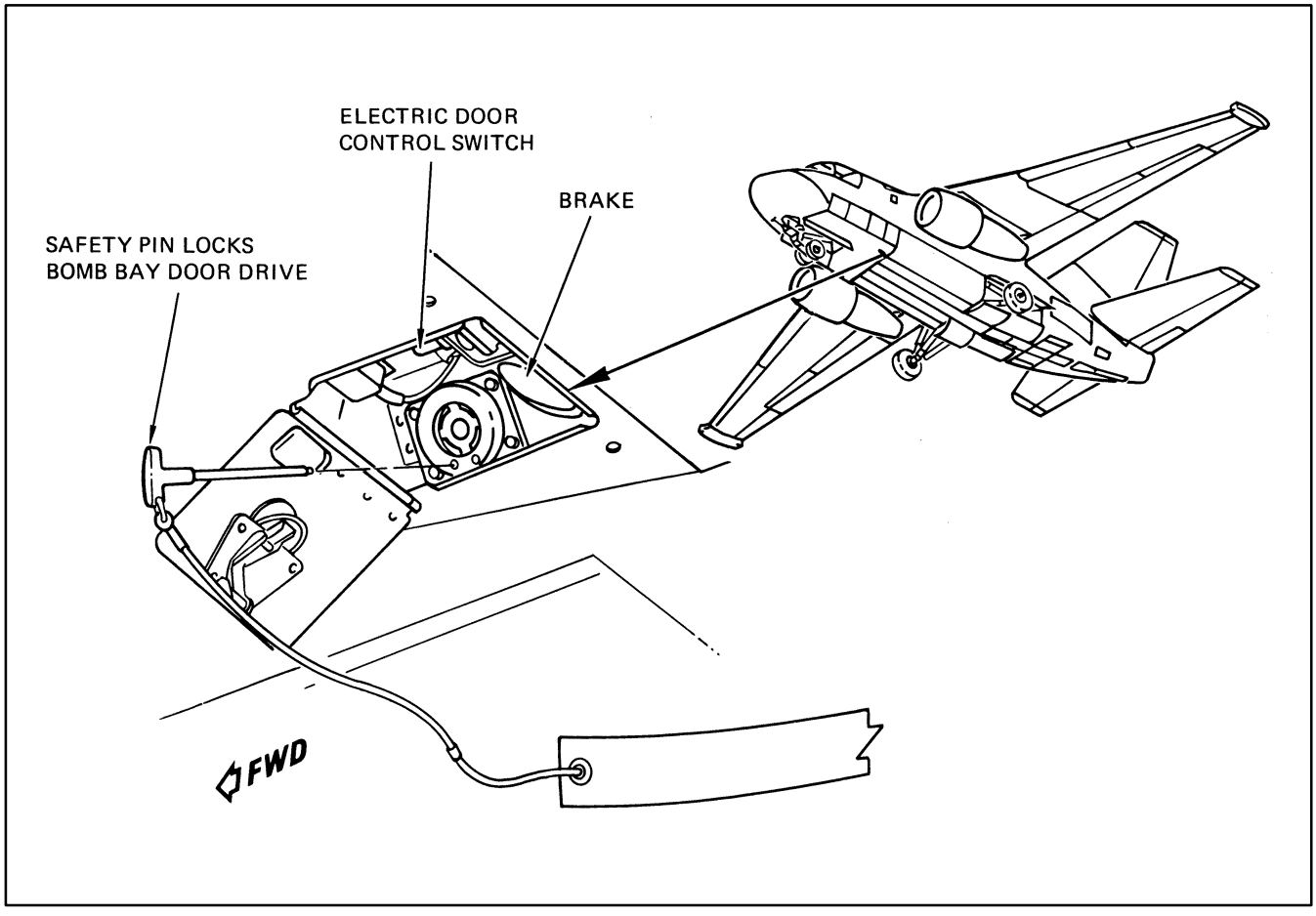

Figure 3-9. Bomb Bay Doors Ground Control Panel

3. OFF — Turns off the electric motor. The switch is spring-loaded to the OFF position.

The bomb bay doors can be opened or closed by a handcrank when electrical power is not available.

The bomb bay doors can also be operated manually by the brake control located just below the electric door control switch. The brake control has the following positions:

1. Handle in — connects the bomb bay door to the electric drive and prevents manual bomb bay door movement.
2. Handle out — disconnects the bomb bay door from the electric drive and allows manual bomb bay door movement.

WARNING

The bomb bay door drive safety pin shall be installed when the bomb bay doors are open.

3.6.4 Bomb Bay Racks. Bomb bay installations comprise two weapon stations in each bomb bay with two BRU-14/A bomb racks installed in each bay. The BRU-14/A bomb rack performs the following functions:

1. Locks to prevent uncontrolled release. Unlocks electrically for normal release sequence.
2. Unlocks via an explosive cartridge for backup purposes.
3. Releases by electrical impulses for normal purposes.
4. Releases by an explosive cartridge for backup purposes.

Note

Weapons unlocked explosively cannot be relocked.

5. Provides 14-inch suspension for weapons weighing up to 850 pounds.

3.6.4.1 Rack Lock Controls. The bomb bay rack lock controls are three position switches, spring-loaded to the center OFF position. There is one rack lock switch per bomb bay rack (two per bomb bay) located on the forward bulkhead of each bomb bay. The switch electrically locks (LK) or unlocks (UNLK) the racks during loading or unloading by holding the switch in the appropriate position when power is applied. The rack locks automatically, when power is applied, if a store is in place and the rack has been manually unlocked. The racks can be locked or unlocked manually (power not applied), by rotation of a knurled nut located on the rack. A LK/UNLK indicator that indicates the position of the rack lock is just forward of the knurled nut (see Figure 3-10).

3.6.5 Wing Stations. There are two wing stations with removable pylons, one on each wing just outboard of each engine. The wing stations are designated W5 on the left wing and W6 on the right wing.

The wing station racks can be configured for either single or three weapons using TERs. They can be configured in one of three ways:

1. Single weapon at each station.
2. Triple weapons either left or right and single weapon on the other station.
3. Triple weapons left and right.

Wing station release sequences are provided in the S-3B TACMAN, NWP 3-22.5-S3B, Vol. II Appendix A.

Note

The only way to tell if the racks are clean is by an external check from an outside observer.

3.6.6 Wing Racks. Each wing station contains one BRU-11/A bomb rack that performs the following functions:

1. Locks to prevent uncontrolled release, and unlocks electrically for normal use.
2. Unlocks by an explosive cartridge for backup purpose.
3. Releases by an explosive cartridge for normal and backup purposes.
4. Provides 14- and 30-inch suspension for weapons combinations weighing up to 2,500 pounds.

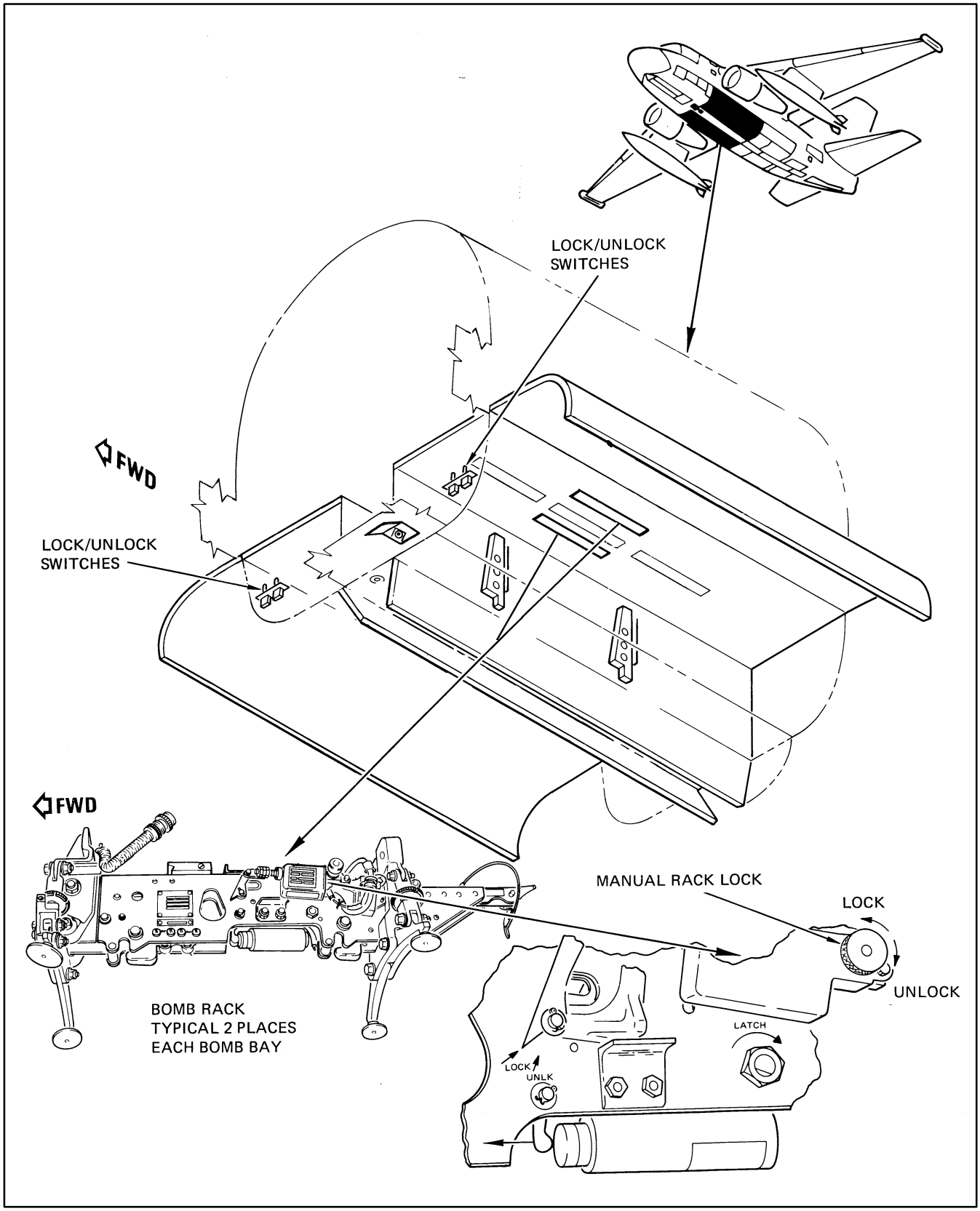

Figure 3-10. Bomb Bay Stations Controls and Indicators

Note

- W5 is cleared to carry the 31-301 Air Refueling Store which, when fully fueled with JP-5, weighs 2,850 pounds.
- Weapons on TERS are unlocked manually by groundcrew and are released by an explosive cartridge for normal and backup purposes.
- Weapons unlocked explosively cannot be relocked.

3.6.6.1 Wing Station Rack Lock Controls. The wing station rack lock controls and indicators function the same as the bomb bay rack lock controls and indicators. See Figure 3-11 for location of wing rack lock control switch and indicator.

3.6.7 Armament Control System. Armament control system components are listed in Figure 3-12.

3.7 KILL STORES OFF-LINE CONTROL

The pilot station provides extensive armament controls. The pilot and TACCO, working together, can deploy a wide variety of ordnance from both the bomb bays and wing stations.

The ACP, located on the center console, contains most of the armament controls.

The following armament controls and indicators are located at the pilot station.

3.7.1 MASTER ARM Switch. The MASTER ARM switch (see FO-1) provides release and firing power for the automatic, manual, and selective jettison modes. Armament power is removed when the switch is positioned to OFF. The MASTER ARM switch furnishes the pilot with ultimate release control over all weapons.

3.7.2 Master Arm Cue Light. The MSTR ARM cue light (see FO-1) lights green, advising the pilot to change the MASTER ARM switch position. When the switch position is compatible with the ACP commands, the cue light goes out. The light provides proper switch commands in both automatic and manual modes.

WARNING

If the MASTER ARM cue light is on with the MASTER ARM switch OFF, and no weapon is selected for release, assume a K6 relay failure. Ordnance may be selected, armed, and released with the MASTER ARM switch in the OFF position.

3.7.3 Emergency Jettison Switch. The EXT JETT switch (see FO-1) provides rapid weight reduction in the event of an emergency. When EXT JETT is pressed, both wing stations and 15 of the 16 launcher chutes have their stores jettisoned in less than 10 seconds.

WARNING

Emergency jettison of sonobuoys is not available when the decoder programmer, KY-747/ASQ-147, has been removed from the aircraft. Sonobuoys shall not be carried in aircraft not equipped with decoder programmer, KY-747/ASQ-147, when single-engine gross weight/bingo considerations may require jettison of sonobuoy loads.

Note

- The sonobuoy in chute P-2 remains in the chute when EXT JETT is pressed.
- The EXT JETT switch operates with or without MASTER ARM power applied.

3.7.4 STORES Switch. The STORES switch, located on the control stick (see FO-1), causes the release of selected free fall weapons or Harpoon missiles in the manual mode.

Note

The STORES switch provides paired release of wing stores when similar weapons are loaded and both wing stations selected.

It is not possible to manually select the wing stations and the bomb bays on the ACP at the same time for release on the same run. If this occurs, the quadrant lights will go from either white or amber to red. Therefore, if extremely close spacing of wing and bomb bay stores is desired, off-line drops are not an option.

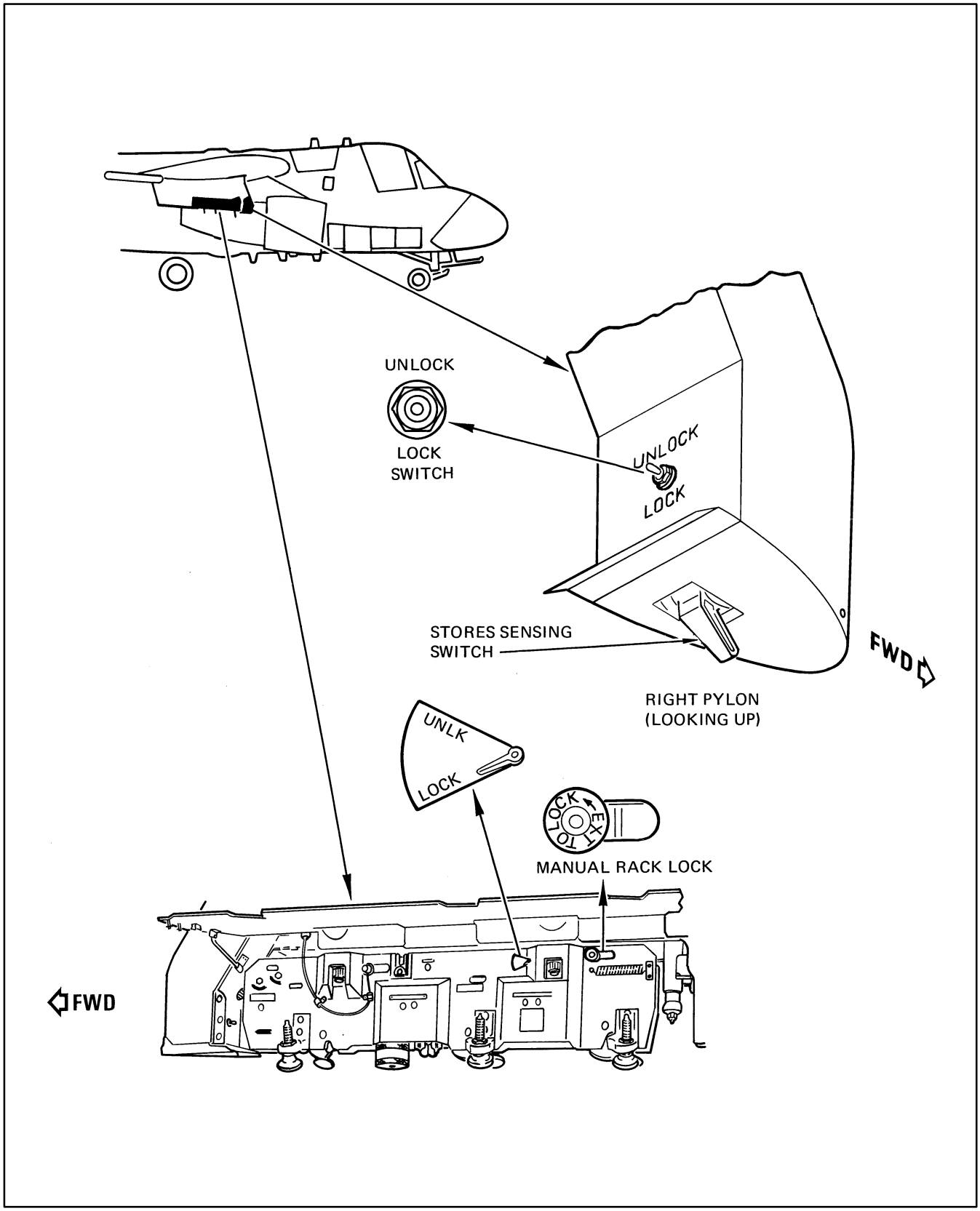

Figure 3-11. Wing Station Pylon Controls and Indicators

TYPE DESIGNATOR	NOMENCLATURE	COMMON TERMINOLOGY	LOCATION
C-8857B/ASQ-47	Armament System Control	Armament Control Panel (ACP)	Pilot center console
KY-745A/ASQ-147	Command Signals Decoder	Wing Station Decoder Left	Left wing pylon
KY-745A/ASQ-147	Command Signals Decoder	Wing Station Decoder Right	Right wing pylon
None	MASTER ARM Switch	Armament Power Switch	Pilot left console
None	MSTR ARM Cue Indicator Light	Master Arm Cue Indicator	Pilot instrument panel
None	SAFETY DISABLE KILL Switch	Safety Disable Kill Switch	Right hinged circuit breaker panel
None	EXT JETT Switch	Emergency Jettison	Left side, pilot instrument panel
None	TORP PRESET Switch	TORP PRESET Switch	Right-hinged circuit breaker panel
None	TORP PWR Indicator	Torpedo Power Indicator	TACCO station
None	Trigger and Stores Release Switches	Triggers and Stores Release	Pilot control stick grip
None	Bomb Bay Rack Lock Indicators	Lock/Unlock Switches	Forward bulkhead of the bomb bay
None	Bomb Bay Rack Lock Indicators	Lock/Unlock Indicators	Left and right sides above the bomb bay
PP-6664/ASQ-l47	Power Supply	Power Supply	Left internal avionics bay
KY-746B/ASQ-147	Bomb Bay Decoder	Decoder	Right bomb bay
J-3069/ASQ-147	Bomb Bay Distribution Box	Distribution Box	Right bomb bay
J-3070/ASQ-147	Wing Station Distribution Box Left	Distribution Box	Left wing pylon
J-3070/ASQ-147	Wing Station Distribution Box Right	Distribution Box	Right wing pylon
None	Wing Station Rack Lock Switch	Lock/Unlock Switch	Left and right wing pylon
None	Wing Station Rack Lock Indicators	Lock/Unlock Indicators	Left and right wing pylon
C-9800/AWG-l9(V)	Harpoon Aircraft Command Launch Control Panel	HACLC	TACCO Station
C-9802/AWG-19(V)	Control Distribution Box	CBD	Left and right pylon
None	Fire Detector Control Unit	FDCU	Left and right pylon

Figure 3-12. Armament Control System Components

If similar multiple bomb bay stores are selected, train release can be accomplished by successive pressing of the pilot STORES switch. The COTAC STORES switch does not function for stores release.

WARNING

The TACCO HACLCS PANEL release switch will function identically to the pilot stores switch for all weapons, provided HACLCS power is ON.

Note

ARM SETTING requirements for the Mk 46 torpedo preclude multiple weapon selection and train release from the bomb bay racks.

3.7.5 Trigger Switch. The TRIGGER switch, located on the control stick (see FO-1), fires forward firing rockets and flares in the manual mode only. If ripple is selected on the launcher, all rockets are fired when the TRIGGER switch is pressed (the ripple option is not available for flares). If single is selected, one rocket or a pair of flares is fired each time the TRIGGER switch is pressed unless LAU-61 or LAU-68 pods are installed, in which case a pair of rockets will fire.

Note

- When the PILOT TRIGGER switch is depressed with MASTER ARM ON, a firing circuit signal is sent to each engine activating continuous engine ignition. Ignition continues for 5 to 15 seconds after TRIGGER switch is released.
- The COTAC TRIGGER switch does not function for stores release.

3.7.6 Bomb Bay Heat Caution Lights. The bomb bay heat caution lights (LB BAY HOT/RB BAY HOT) (FO-1), when lighted, advise the pilot that bomb bay temperature has reached 150 °F and is approaching the high temperature limit of the Mk 46 torpedo. The pilot can lower the temperature by opening the bomb bay doors. In addition, securing the APU will secure hot bleed air to the APU bleed air duct which is located in the left bomb bay.

3.7.7 Armament Control Panel. The ACP, located on the center console (see FO-1), contains most of the armament controls. Panel functions are described in Figure 3-13 Selection, presetting, and release of weapons can be accomplished from the ACP which performs the following functions:

1. Controls the manual delivery of both forward firing fixed weapons and droppable stores.
2. Controls the delivery of droppable stores or Harpoon missiles in the AUTO mode when commanded by the GPDC.
3. Controls the release of the SAR sonobuoy chute.
4. Controls bomb bay doors.

3.7.7.1 STATION SELECT Switches. The lighting configuration for the six STATION SELECT switches displays the following status indications:

1. Green — indicates a store-in-place signal has been received by the ACP.

Note

- A store-in-place signal is sent if the STORES SENSING switch is closed on the BRU-11/A rack (wing stations) or if the rear hook is closed on the BRU-14/A (bomb bay).
- The ACP wing station select light will indicate green any time a TER, PBR, or MSL is selected in the WPN, W5, or W6 window. The light will extinguish after three depressions of the STORES switch, regardless of weapons dropped with TER selected or when Harpoon is dropped, but will remain green with PBR selected regardless of the number of weapons dropped.

2. White — indicates the weapon is selected but not armed. When dropping from BRU-11/14, rack is now UNLOCKED.
3. Amber — indicates a weapon is ready for release.
4. Red — indicates the weapons selected are incompatible for a multiple release, selection of a bomb bay store has been attempted with the TORP PRESET switch in the OFF position, or a system failure has occurred.
5. Black — indicates a store is not in place.

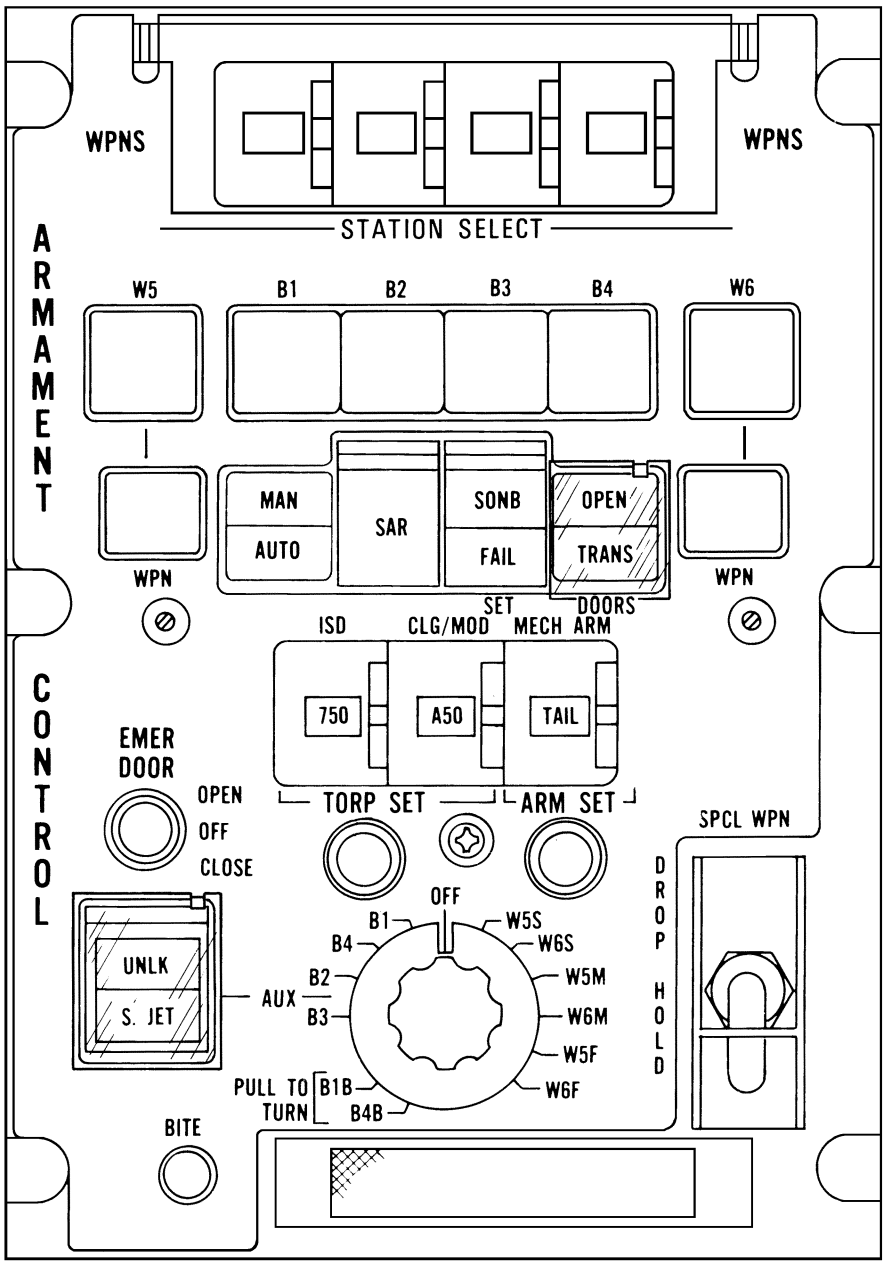

NOTE

DOORS OPEN/TRANS SWITCH HAS SAFETY COVER ON AIRCRAFT MODIFIED BY AVC 2314

Figure 3-13. Armament Control Panel (Sheet 1 of 5)

CONTROL/ INDICATOR	POSITION	INDICATION	FUNCTION
WPNS (B1, B2, B3, B4)	Rotate four thumb-wheel switches to weapon type that is loaded	Visual in windows B1, B2, B3, B4	Indicates type weapons loaded at the bomb bay stations (operator inserted). Load Options: B76 — MK 76 Practice Bomb 0 — Empty Blank — Empty B57 — N/A T46 — MK 46 Torpedo T50 — MK 50 Torpedo D36 — MK 36 Destructor B82 — MK 82 General Purpose Bomb
STATION SELECT W5, B1, B2, B3, B4, W6	Upper left quadrant	Green	Indicates a store in place signal has been received by the ACP.
	Upper right quadrant	White	Indicates a weapon is selected but not armed. When dropping from BRU-11/14, rack is UNLOCKED.
	Lower right quadrant	Amber	Indicates weapon is ready for release.
	Lower left quadrant	Red	Indicates the weapons selected are incompatible for a multiple release, selection of a bomb bay store has been attempted with the TORP PRESET switch in the OFF position, or a system failure has occurred.
	All quadrants	Black	Indicates store is not in place.
WPN W5, W6	Rotate two screws to type of weapon loaded	Visual in windows W5 and W6	Indicates type of weapons loaded at the wing stations.
MAN/AUTO	AUTO	AUTO legend lights green	Indicates the system is in the automatic mode.
	MAN	MAN legend lights amber	Indicates the system is in the manual mode.
SAR		Green	Indicates the lever at the bottom of chute P-2 senses a store in place or a cap over an empty SLC.
		Black	Indicates chute is empty.
SET	SONB	Red	Indicates the sonobuoy safety switch is open.
		Black	Indicates the sonobuoy safety switch door is closed.
	FAIL	Red	Indicates that a system component has failed.
		Black	Indicates that all system components are operating.

Figure 3-13. Armament Control Panel (Sheet 2)

CONTROL/ INDICATOR	POSITION	INDICATION	FUNCTION
SET (cont.)	**Note** The SET switch will fail ACP and turn Fail Light on.		
DOORS	OPEN	Amber	Indicates bomb bay doors are open. Press to close doors.
	TRANS	Red	Indicates bomb bay doors are in transit from either open to closed or closed to open.
	OPEN/TRANS	Black	Indicates doors are closed. Press to open doors.
ISD	125D 275D 275 500 750 1000 60 125 375 D375 850 1600	Visual in Window	Selects one of 12 search options for torpedoes. **Note** ARM SET switch lights amber after the station has been selected. MK 46 torpedo initial search depths (ISD) are 125D, 275D, 275, 500, 750, and 1,000. Selection of 750 and 1000 for initial search depth selects 850 and 1,400 if a MK46 MOD 5 is loaded. MK 50 torpedo initial search depths are 60, 125, 375, D375, 850, and 1,600.
CLG/MOD	A50 A50 A20 P50 P20 ST20 D60 20 60	Visual in window	Selects one of eight ceiling mode options for torpedoes. **Note** Second A50 is redundant. MK46 torpedo ceiling/modes are A50, A20, P50, and P20. A = active. P = passive. MK50 torpedo ceiling/modes are ST20, D60, 20, and 60. ST = surface target D = Doppler
MECH ARM	NOSE TAIL N/T SAFE	Visual in window	Arms bombs, cluster bombs, torpedoes, and missiles for release in manual mode. **Note** ARM SET switch lights amber after the station has been selected.

Figure 3-13. Armament Control Panel (Sheet 3)

CONTROL/ INDICATOR	POSITION	INDICATION	FUNCTION
EMER DOOR	OPEN	Visual	Energizes doors to the drop position.
	CLOSE	Visual	Energizes doors to the closed position.
	OFF	Visual	Restores bomb bay door control to the normal door control switch.
TORP SET		Amber	Sets the thumbwheel-selected options ISD and CLG/MOD.
		Black	Selected options have been entered.
ARM SET		Amber	Sets the thumbwheel-selected options on the MECH ARM switch when ARM SET pressed.
		Light out	Selected options have been entered.
UNLK/S.JET	UNLK	Green	Activates the auxiliary unlock cartridge on the bomb rack at the selected station.
	S.JET	Green	Activates the release cartridge on the bomb rack at the selected station.
AUX Rotary Switch			Selects a station for auxiliary unlock or selective jettison.
	B1 through B4	Visual	Selects one of the four conventional bomb bay stations.
	B1B and B4B	Visual	N/A
	W5S and W6S	Visual	Selects one of the two wing stations when single stores are loaded. When a TER is loaded on W5 or W6, the W5S and W6S option no longer functions except as noted in the following warning.
	WARNING If PBRs are set in stations W5 or W6 windows, selection of W5S or W6S and depression of the selective jettison will release the TER.		
	W5M and W6M	Visual	Selects one of the two wing stations when multiple (TER) stores are loaded.
	W5F and W6F	Visual	Stores loaded at W5 and/or W6 will free fall.

Figure 3-13. Armament Control Panel (Sheet 4)

CONTROL/ INDICATOR	POSITION	INDICATION	FUNCTION
AUX Rotary Switch (cont.)	**WARNING** Selection of W5F or W6F and depression of the selective jettison switch will release the TER. **Note** Selective jettison of wing stores with the AUX rotary switch set to W5F or W6F will result in gravity release of store. Store will freefall and will not be forcibly ejected from the bomb rack.		
SPCL WPN	HOLD DROP	Visual Visual	Inhibits the release of special weapons. Permits the armament system to receive a release signal for dropping a special weapon.
BITE		White center Black center	Indicates ACP failure. Indicates normal ACP operation.

Figure 3-13. Armament Control Panel (Sheet 5)

3.7.7.2 Weapons Load Indicators. Four thumbwheel switches located directly above each bomb bay STATION SELECT switch (see Figure 3-13) indicate the stores loaded at the four bomb bay stations. Setting the weapons load indicators determines the initial weapon inventory. The weapons load indicators should be set before power is applied to the ACP.

WARNING

When troubleshooting the ACP in flight, ensure the MASTER ARM switch is set to OFF before cycling any circuit breakers. Failure to do this may cause wing stores to be inadvertently released.

Note

The ACP release logic may not recognize a changed load indicator after power is applied to the aircraft unless the circuit breakers (LOGIC PWR XFMR NO. 1, 1-J-4, and LOGIC PWR XFMR NO. 2, 3-J-3) are pulled. Up to 4 minutes may be required before resetting these circuit breakers, depending on the new weapon configuration, while operating the ACP in manual mode. Initially pull and reset the circuit breakers after a momentary delay as ACP logic may recognize the changed load. Load indicator changes may be made without pulling the circuit breakers if the ACP is in AUTO mode and the load indicator change is followed by the ARM/ORD reinitialization function procedures.

Console lighted (red) windows at the left of each weapons load indicator thumbwheel show what is loaded. The thumbwheels can insert the following bomb bay load options:

1. B76 = Mk 76 practice bomb
2. 0 = Empty
3. Blank = Empty
4. B57 = Special weapon
5. T46 = Mk 46 torpedo
6. T50 = Mk 50 torpedo

7. D36 = Mk 36 destructor — low drag

8. B82 = Mk 82 general purpose bomb — low drag.

Note

Mk 82 general purpose bombs equipped with snakeye fins may also be carried in and released from the bomb bays if equipped with MAU 111 belly straps.

Weapon Load Indicators (WPNs) for the wing stations (W5 and W6) are located below each wing station select switch (see Figure 3-13). Two adjustment screws set the load for each station. Console lighted (red) windows above each adjustment screw show what is loaded. The adjustment screws turn to insert the following wing station load options:

WING STATIONS W5 and W6:

1. B82 = Mk 82/83/84 bomb BLU-111/110/BDU-45 low drag

2. R82 = Mk 82/83/ bomb BLU-111/110/BDU-45 high drag

3. D36 = Mk 62 QST mine

4. R36 = Mk 62/63 QST mine — high drag

5. M52 = Mk 52 mine

6. M55 = Mk 55/Mk 65 QST mine

7. M56 = Mk 56 mine

8. RKT04 = AGM 65 or LAU-10 series rocket launcher

9. RKT19 = LAU-61 series rocket launcher

10. RKT07 = LAU-68 series rocket launcher

11. FLR08 = SUU-44/A or SUU-25 flare dispenser

12. MSL = AGM-84 series weapons

13. C20-2 = Mk 20 rockeye (Mod 2)

14. C20-3 = Mk 20 (except Mod 2)/CBU 99/100 rockeye

15. TER R82 = Mk 82/83/ bomb BLU-111/BDU-45 high drag with TER/BRU-42

Note

B82 also is selected when B83s and B84s are loaded on the wing stations. The MK-83 can be carried on a parent rack (on the wing station) or on a TER. The MK-84 can be carried on a parent rack only. The specific weapons can then be selected in the kill stores tableau.

16. TER B82 = Mk 82/83/ bomb BLU-111/110/BDU-45 low drag or TALD — TER/BRU-42

17. TER R36 =Mk 62/63 QST mine high drag with TER/BRU-42

18. TER D36 = Mk 62 QST with TER/BRU-42

19. TER CLS = Mk 20/CBU 99/100 rockeye with TER/BRU-42

20. TER RKT = LAU-10/61/68 series rocket launchers with TER/BRU-42

21. TER FLR = SUU-44/25 flare dispenser with TER/BRU-42

22. PBR76 = Mk 76/BDU-33 practice bombs with TER/BRU-42 (older ACP)

23. PBR106 = Mk 106/BDU-48 practice bombs with TER/BRU-42 (older ACP)

24. TER 76 = Mk 76/BDU-33 practice bombs with TER/BRU-42

25. TER 106 = Mk 106/BDU-48 practice bombs with MER/TER/BRU-41/42

26. FTK = Aero 1D fuel tank/ARS/CNU-188/264 cargo pod

27. Blank = No weapon (empty station).

Note

For instrumentation packages (TACTS/ SAIP/MSR/EATS/ARDS), any wing station single release weapon load indicator setting except FTK or 0 is authorized; however, setting must remain the same once checked.

TACTS pod mounted on the LAU-7 missile rail can be loaded on W5/W6 for tactical aircrew training system No Drop Weapon Scoring (NDWS). Explosive unlock/release cartridges are not installed when TACTS pods are carried to prevent pod release or jettison.

When the station is selected and armed (See Figure 3-14), depression of the pilot stores release switch will trigger the TACTS pod to transmit a simulated weapon release signal to the TACTS tracking range.

Manual release may be accomplished by the pilot only from the STORES switch or the trigger switch on the control stick, and by the TACCO from the HACLCS panel release switch with HACLCS power ON. Operation in the manual mode can only be accomplished through the ACP.

WARNING

- Even though FTK is selected, it does not prevent the normal jettison of ordnance, nor does it prevent normal selection of and release of ordnance. It only precludes normal arming pulses to the station.

- Stores released/jettisoned as FTK are dropped in a safe condition.

Note

Aero 1D Fuel Tank and A/A42R-1 ARS cannot be released via normal ACP selection/release procedures. Selective jettison or emergency jettison procedures must be utilized to jettison the AERO 1D or ARS.

STEP	OPERATOR ACTION	INDICATION	REMARKS
1	Press station select switches of desired stations W5-W6.	Selected switches light white. MSTR ARM CUE indicator lights green. ARM SET switch lights amber.	
2	Position MECH ARM switch to N/T.	Visual	As appropriate for the weapon being simulated.
3	Press ARM SET switch.	ARMSET switch light goes off.	
4	Set MASTER ARM switch to ON.	MSTR ARM CUE indicator goes off. STATION SELECT switches W5-W6 light amber if selected.	
5	Press STORES switch on pilot control stick once for simulated weapon release.	STATION SELECT switch goes off for approximately 4 seconds, then lights green again. MSTR ARM CUE light illuminates green.	Multiple release requires operator selection and rearming for each subsequent drop simulation. **Note** For No Drop Aircraft Tracking, no weapon station selection is required. The only requirement is positioning MASTER ARM switch to ON.
Note TACTS pod with LAU-7 missile rail can be carried and operated with all current W5/W6 ACP weapons load indicators except FTK or 0.			

Figure 3-14. Selection and Simulated Release of Weapons for TACTS NDWS

The armament system provides for manual control of torpedoes, bombs, flares, and Harpoon missiles by the aircrew. Procedures for selection and release of bombs and torpedoes and firing of rockets are described in Figures 3-15 through 3-19. Selection and firing of flares is the same as for rockets. However, flare pods normally release a pair of flares with each release pulse, and have no ripple action.

Note

Information contained in Figures 3-16 through 3-19 concerning operator action and indications is instructional in nature. These procedures are not intended to be a required in-flight checklist.

3.8 SELECTIVE JETTISON

Selective jettison procedures are described in the selection and release of bombs and mines in the manual mode (see Figures 3-16 and 3-17).

The selective jettison switch (see Figure 3-13) jettisons single weapons, rocket launchers and flare launchers. Provisions are provided for jettisoning weapons located on the TER(s) in the normal sequence, leaving the TER(s) intact.

CAUTION

Do not hold EXT JETT, S JETT, or AUX UNLK switches longer than 1 second.

Note

Selective jettison of wing stores with the AUX rotary switch set to W5F or W6F will result in gravity release of store. Store will free fall and will not be forcibly ejected from the bomb rack.

3.9 EMERGENCY JETTISON

The purpose of the emergency jettison (EXT JETT) switch (see FO-1) is to provide rapid weight reduction in the event of an emergency.

The wing stations and sonobuoy chutes receive jettison commands from the pilot by the EXT JETT switch, and release all wing station loads and 15 of 16 sonobuoys (sonobuoy in chute P-2 remains in place) in less than 10 seconds. If TERs are mounted, emergency jettison drops the TERs.

STEP	OPERATOR ACTION	INDICATION	NOTES
1	Weapon load switches B1 through B4 and W5-W6 positioned to wing and bomb bay inventory.	Visible in switch windows.	This step must be performed prior to engaging the system.
2	Press MAN switch on ACP.	MAN switch lights amber. AUTO switch light is off.	SONB switch light remains off. SAR switch lights green. STATION SELECT switches light green for stations that have a store in place. All other switch lights remain off. If sonobuoy safety switch door is open, SONB switch lights red.
3	MASTER ARM switch set to OFF.	Visual	
4	EMER DOOR switch set to OFF.	Visual	
5	AUX rotary switch positioned to OFF.	Visual	

Figure 3-15. Initialization of Armament Control System (Manual Mode)

STEP	OPERATOR ACTION	INDICATION	REMARKS
	Note The TORP PRESET switch must be in the ON position to select, arm, and release any ordnance from the bomb bay.		
1	Press STATION SELECT switches of desired stations B1 through B4.	Selected switches light white. MSTR ARM cue indicator lights green. ARM SET switch lights amber.	All droppable stores require some arming function.
2	Position MECH ARM switch to NOSE, TAIL, N/T, or SAFE.	Visual	Bombs and cluster bombs are armed either NOSE, TAIL, or N/T.
3	Press ARM SET switch.	ARM SET switch light goes off.	
4	Press DOORS OPEN/TRANS switch.	TRANS switch lights red. OPEN switch lights amber. TRANS switch goes off.	While doors are opening. When doors are fully opened. If the TRANS or OPEN lights do not light, or if the TRANS light remains red and the OPEN light does not light amber after approximately 12 seconds, the DOORS OPEN/TRANS switch has failed. Proceed to steps 4a and 4b. Otherwise, proceed to step 5.
4a 4b	Set EMER DOOR to OPEN. Set EMER DOOR to OFF.	TRANS switch lights red. OPEN switch lights amber. TRANS switch goes off. Visual.	For approximately 6 seconds. When doors are open. DOORS OPEN switch remains amber.
5	Set MASTER ARM switch to ON.	MSTR ARM cue indicator goes off. UNLK switch lights green momentarily. STATION SELECT switches B1 through B4 light amber if selected.	 Only when the AUX rotary switch is turned to the station selected. If the UNLK switch remains green, a malfunction is indicated in the primary unlock mechanism. Proceed to steps 5a, b, c, and d. Otherwise, proceed to step 6.

Figure 3-16. Selection and Release of Bombs from Bomb Bay (Manual Mode) (Sheet 1 of 2)

STEP	OPERATOR ACTION	INDICATION	REMARKS
5a	Determine which STATION SELECT switch did not change from white to amber.	Visual.	
5b	Position AUX rotary switch to malfunctioning rack.	UNLK switch is green.	
5c	Press UNLK switch.	UNLK switch goes off. STATION SELECT switch that did not turn on lights amber.	S JET switch lights green.
5d	Position AUX rotary switch to OFF.	S JET switch goes off.	
6	Press STORES switch on control stick once for each release.	Selected STATION SELECT switch B1 through B4 goes off. MSTR ARM cue indicator lights green.	If selected station switch B1 thru B4 does not go off, proceed to steps 6a, b, and c. Otherwise, proceed to step 7.
6a	Position AUX rotary switch to malfunctioning rack.	S JET switch lights green.	
6b	Press S JET switch.	STATION SELECT switch goes off. S JET switch goes off.	
6c	Position AUX rotary switch to OFF.	Visual.	After the last selected store has been released, the MSTR ARM cue indicator lights green.
7	Set MASTER ARM switch to OFF.	MSTR ARM cue indicator goes off. All other switches remain lighted as before.	System is now secured.
8	Press DOORS OPEN/TRANS switch.	TRANS switch lights red. OPEN switch light is off.	Doors are closing. When doors are closed (approximately 6 seconds), TRANS switch light goes off. If a malfunction occurs and the lighting sequence does not occur, repeat steps 4a and 4b, except set EMER DOOR switch to CLOSE.

Figure 3-16. Selection and Release of Bombs from Bomb Bay (Manual Mode) (Sheet 2)

STEP	OPERATOR ACTION	INDICATION	REMARKS
1	Press STATION SELECT switches of desired stations W5-W6.	Selected switches light white. MSTR ARM cue indicator lights green. ARM SET switch lights amber.	
2	Position MECH ARM switch to NOSE, TAIL, N/T, or SAFE.	Visual.	Bombs, mines and cluster bombs are armed NOSE, TAIL, or N/T.
3	Press ARM SET switch.	ARM SET switch light goes off.	
4	Set MASTER ARM switch to ON.	MSTR ARM cue indicator goes off. UNLK switch lights green momentarily. STATION SELECT switches W5-W6 light amber if selected.	Only when the AUX rotary switch is turned to the station selected. If the UNLK switch remains green, a malfunction is indicated in the primary unlock mechanism. Proceed to steps 5, 6, 7, and 8. Otherwise, proceed to step 9.
5	Determine which STATION SELECT switch did not change from white to amber.	Visual.	
6	Position AUX rotary switch to malfunctioning rack.	UNLK switch is green.	
7	Press UNLK switch.	UNLK switch goes off. STATION SELECT switch that did not turn on lights amber.	S JET switch lights green.
8	Position AUX rotary switch to OFF.	S JET switch goes off.	
9	Press STORES switch on pilot control stick once for each release.	Selected STATION SELECT switch W5-W6 goes off. MSTR ARM cue indicator lights green.	If similar weapons are loaded and both stations selected, the STORES switch provides paired release of weapons. If selected station switch W5-W6 does not go off, proceed to steps 10, 11, 12, and 13. Otherwise, proceed to step 15.

Figure 3-17. Selection and Release of Bombs, Practice Bombs, and Missiles from Wing Stations (Manual Mode) (Sheet 1 of 2)

STEP	OPERATOR ACTION	INDICATION	REMARKS
10	Position AUX rotary switch to malfunctioning rack (W5S or W6S).	S JET switch lights green.	
11	Press S JET switch.	STATION SELECT switch goes off. S JET switch goes off.	If selected station switch and S JET switch do not go off, proceed to step 12. Otherwise, proceed to step 14.
12	Position AUX rotary switch to malfunctioning rack.	S JET switch lights green.	
13	Press S JET switch.	STATION SELECT switch goes off. S JET switch goes off.	
14	Position AUX rotary switch to OFF.	Visual.	After the last selected store has been released, the MSTR ARM cue indicator lights green.
15	Set MASTER ARM switch to OFF.	MSTR ARM cue indicator goes off. All other switches remain lighted as before.	System is now secured.

Figure 3-17. Selection and Release of Bombs, Practice Bombs, and Missiles from Wing Stations (Manual Mode) (Sheet 2)

WARNING

Ensure that SAR launching chute, search store launching chutes, and wing racks are unloaded before actuating the SAFETY DISABLE SAR & JTSN switch when simulating weight-off-wheels condition.

Weight on the wheels prevents emergency jettison switch operation.

The SAFETY DISABLE SAR & JTSN switch is a two-position switch, springloaded in the OFF position. The switch is located on the right-hinged circuit breaker panel, and is used to bypass the weight-on-wheels restriction to functionally check the jettison and SAR circuits.

WARNING

Emergency jettison of sonobuoys is not available when the decoder programmer KY-747/ASQ-147 has been removed from the aircraft. Sonobuoys shall not be carried in aircraft not equipped with decoder programmer KY-747/ASQ-147 when single-engine gross weight/bingo considerations may require jettison of sonobuoy loads.

Note

Bomb bay stores cannot be dropped through the emergency jettison switch. Bomb bay stores may be jettisoned only through the selective jettison switch on the ACP.

STEP	OPERATOR ACTION	INDICATION	REMARKS
	WARNING If PBRs are set in stations W5 or W6 windows, selections of W5S or W6S and depression of the selective jettison switch will release the TER. Selection of W5F or W6F and depression of the selective jettison switch, regardless of stores loaded, will release the TER. **Note** • When a TER is loaded on stations W5 or W6, the W5S and W6S options no longer function except as noted in the above warning. • The Harpoon manual launch procedures are contained in the S-3B NATOPS Supplemental Flight Manual.		
1	Press STATION SELECT switches on desired station W5-W6.	Selected switches light white. MSTR ARM cue indicator lights green. ARM SET switch lights amber.	
2	Position MECH ARM switch to NOSE, TAIL, N/T, or SAFE.	Visual.	
3	Press ARM SET switch.	ARM SET switch light goes out.	Bombs/mines are armed NOSE, TAIL, or N/T.
4	Set MASTER ARM to ON.	STATION SELECT switches W5–W6 light amber if selected. MASTER ARM cue light out.	If amber station select, proceed to step 10. If not, proceed to step 5.
5	Determine which station select switch did not change from white to amber.	Visual.	
6	Position AUX rotary switch to malfunctioning rack (W5M or W6M).	Black, UNLK, or S JET lights on.	If black proceed to step 7. If UNLK light on, proceed to step 9. If S JET, proceed to step 11.
7	Turn AUX rotary switch to OFF.	Visual.	Black indicates S JET sequence is not possible.
8	Select other station.	Visual.	

Figure 3-18. Selection and Release of Bombs, Practice Bombs, and Missiles from TERs (Manual Mode) (Sheet 1 of 2)

STEP	OPERATOR ACTION	INDICATION	REMARKS
9	UNLK. Sequence must be stopped. AUX rotary switch should be placed to OFF.	Visual.	UNLK light is an indication of ACP logic failure. No UNLK light is associated with TERs.
10	Press STORES switch on pilot control stick once for each release.	STATION SELECT amber light will extinguish after three weapons are dropped. If PBR is selected, amber light will remain on after all stores released.	With PBRs selected, visual identification is required to confirm hung ordnance.
11	Press S JET switch.	S JET light will remain illuminated until three weapons have left the aircraft.	S JET light on after three depressions is possible indication of hung ordnance.

Figure 3-18. Selection and Release of Bombs, Practice Bombs, and Missiles from TERs (Manual Mode) (Sheet 2)

Note

See Emergency Procedures in NAVAIR 53AA4-1 Section V for detailed procedures of external stores and bomb bay stores jettison.

3.10 HARPOON LOS LAUNCH PROCEDURES

The LOS mode is the degraded mode to be used in the event the on-line (CMPTR) mode is not available. The TACCO must ensure that the aircraft is within the pull-up boundary and launch envelope. He must also determine that the engine is ON or engine OFF launch is appropriate. Refer to NAVAIR 01-S3AAB-1A Supplemental NATOPS Flight Manual for additional information on launch procedures.

3.11 MISSILE SIMULATION

The S-3B TMP incorporates a missile simulation program that allows aircrews to practice in-flight missile launch programming without having to load a missile on the aircraft's wing pylons. The program is capable of simulating either an operational missile or a defective missile. Missile simulation is accomplished by installing Harpoon simulation shorting plugs in the wing pylons where the umbilical cables are normally connected to the missile.

The missile simulation program is initiated by the COTAC and when selected, enables the GPDC software subroutines to program either the COTAC, TACCO, or SENSO to be the designated simulation operator. One of the remaining crewmembers can practice normal missile preparation and launch procedures or experience selected missile faults.

3.12 MAVERICK PLUS SYSTEM

3.12.1 Introduction. The Maverick Plus System augments the S-3B ARMCOS to provide the following capabilities:

1. AGM-65E/F/G Infrared (IR) and Laser Maverick initialization and launch
2. AGM-84H/K SLAM-ER initialization and launch
3. Control of the AWW-13 pod for AGM-84H/K SLAM-ER post-launch functions
4. Video processing for AGM-84H/K SLAM-ER missile data received via data link
5. Growth potential to JDAM and other MIL-STD-1760 advanced weapons.

STEP	OPERATOR ACTION	INDICATION	REMARKS
Note The TORP PRESET switch must be in the ON position to select, aim, and release any ordnance from the bomb bay.			
1	Press STATION SELECT switches of desired stations B1 through B4.	Selected STATION SELECT switches light white. MSTR ARM cue indicator lights green. ARM SET switch lights amber. TORP SET switch lights amber.	
2	Position MECH ARM switch to N/T.	Visual.	
3	Press ARM SET switch.	ARM SET switch goes Off	Pressing ARM SET and TORP SET simultaneously may result in the torpedo being dropped in the SAFE mode.
4	Position ISD switch to desired setting.	Visual.	MK46 torpedo initial search depths are 125D, 275D, 275, 500, 750, and 1,000. **Note** Selection of 750 and 1,000 will select depths of 850 and 1,400 if MK46 MOD5. MK 50 torpedo initial search depths are 60, 125, 375, D375, 850, and 1,600.
5	Position CLG/MOD switch to desired setting.	Visual.	MK46 torpedo ceiling/modes are A50, A20, P50, and P20. A = active. P = passive. MK50 torpedo ceiling/modes are ST20, D60, 20, and 60. ST = surface target. D = Doppler.
6	Press TORP SET switch.	TORP SET switch light goes off.	

Figure 3-19. Selection and Release of Torpedoes (Manual Mode) (Sheet 1 of 3)

STEP	OPERATOR ACTION	INDICATION	REMARKS
7	Press DOORS OPEN/ TRANS switch.	TRANS switch lights red. OPEN switch lights amber. TRANS switch light goes off.	Doors are opening. When doors are fully opened. If the TRANS or OPEN light does not light, or if the TRANS light remains red and the OPEN light does not light amber after approximately 12 seconds, the DOORS OPEN/TRANS switch has failed. Proceed to steps 7a and 7b. Otherwise, proceed to step 8.
7a	Set EMER DOOR switch to OPEN.	TRANS switch lights red. OPEN switch lights amber. TRANS switch light goes off.	For approximately 6 seconds. When doors are fully opened.
7b	Set EMER DOOR to OFF.	Visual.	DOORS OPEN switch remains amber.
8	Set MASTER ARM switch to ON.	MSTR ARM cue indicator light goes off UNLK switch lights green momentarily, Selected STATION SELECT switches light amber.	 Only when the AUX rotary switch is turned to the station selected. If the UNLK switch remains green, a malfunction is indicated in the primary unlock mechanism. Proceed to steps 8a, b, c, and d. Otherwise, proceed to step 9.
8a	Determine which STATION SELECT switch did not change from white to amber.	Visual.	
8b	Position AUX rotary switch to malfunctioning rack.	UNLK switch lights green.	
8c	Press UNLK switch.	UNLK switch light goes off. S JET switch lights green. STATION SELECT switch that did not turn on lights amber.	Once the racks are unlocked, they cannot be relocked.
8d	Position AUX rotary switch to OFF.	S JET switch goes dark.	
9	Press STORES release switch on control stick for each release.	Selected STATION SELECT switch light goes off.	If selected STATION SELECT switch light does not go off proceed to steps 9a, 9b, and 9c. Otherwise, proceed to step 10.
9a	Position AUX rotary switch to malfunctioning rack.	S JET switch lights green.	

Figure 3-19. Selection and Release of Torpedoes (Manual Mode) (Sheet 2)

STEP	OPERATOR ACTION	INDICATION	REMARKS
9b	Press S JET switch.	STATION SELECT switch light goes off.	Torpedo released. S JET switch light goes off. MSTR ARM cue indicator lights green.
9c	Position AUX rotary switch to OFF.	Visual.	
10	Set MASTER ARM switch to OFF.	MSTR ARM cue indicator goes off. All other switches remain lighted as before.	 System is now secured.
11	Press DOORS OPEN/ TRANS switch.	TRANS switch lights red. OPEN switch light goes off.	While doors are closing. When doors are closed (approximately 6 seconds). TRANS switch light goes off. If a malfunction occurs and the lighting sequence does not occur, repeat steps 7a and 7b, except set EMER DOOR switch to CLOSE.

Figure 3-19. Selection and Release of Torpedoes (Manual Mode) (Sheet 3)

The major elements of the MPS are the Advanced Missile Interface Box (AMIB), Armament Control Digital Navigation Unit (ACDNU), Digital Data Set (DDS), and Missile Controller (MC). The aircraft is permanently wired to provide MPS functionality when the MPS WRAs are installed. However, MPS WRAs can be removed without affecting the baseline kill stores capability. When the MPS WRAs are removed, blank-off plates are installed to replace the ACDNU and the MC on the center and COTAC side consoles, respectively. A NO AMIB plate is installed in place of the AMIB in the Left Internal Avionics Bay.

WARNING

The TACCO stores release switch on the HACLCS panel shall not be used to release any MPS store.

Note

If the AMIB is removed and the NO AMIB plate is not installed in its place the pilot stores release switch is not functional. However, SEL JETT and EMERG JETT are still available.

Figure 3-20 provides the MPS system diagram with MPS interaction with existing aircraft equipment.

3.12.2 Maverick Plus System Armament and Components. The following paragraphs provide system description of the Maverick Plus System and limited discussion on the weapons capable of being employed by the S-3B equipped with the system. For detailed information regarding armament, the operator should refer to the appropriate manuals concerning each weapon.

3.12.2.1 AGM-65 Maverick Missile. The missile is carried on single rail (LAU-117A(V)2/A) launchers mounted on either wing station. Using the pilot trigger switch, the S-3B is capable of deploying either the E or F (laser and IR guided, respectively) version of the AGM-65. The variants are similar with the exception of their guidance systems. The AGM-65E/F Maverick missiles are primarily for use against targets requiring instantaneous or delayed blast fusing such as concrete fortifications, earth covered bunkers, large structures and ships. The warhead is also

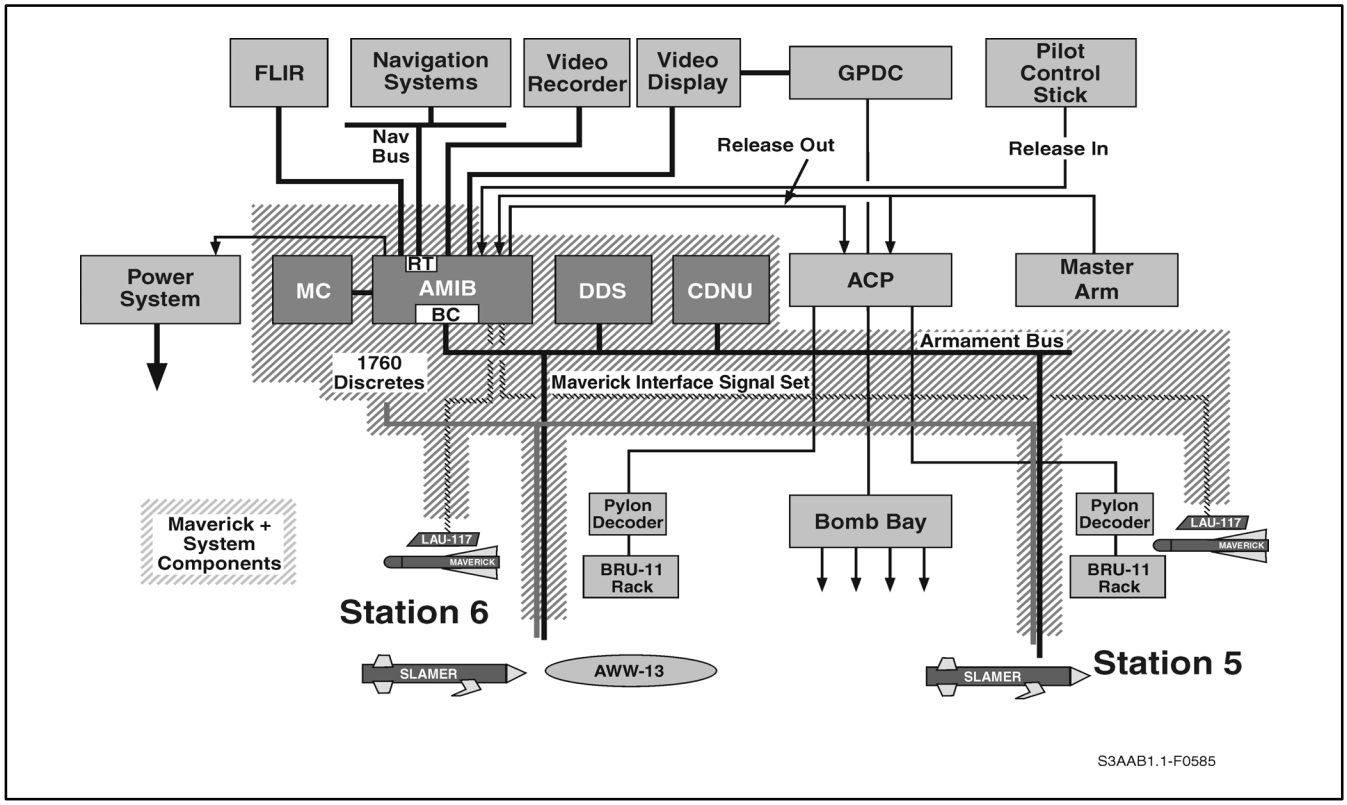

Figure 3-20. MPS System Diagram

effective against armored vehicles, radar vans, boats and small buildings. The AGM-65E/F warhead is a 300-pound kinetic energy penetrator blast/fragmentation warhead. It is contact triggered and contains a fuze mechanism that delays arming until the missile is safely separated from the aircraft. The selectable fuze time delay feature permits a choice of surface detonation or detonation after penetration.

3.12.2.1.1 AGM-65E Laser Maverick. The Laser Maverick contains a sensitive detector that converts laser energy into electrical signals. These electrical signals are processed to provide synthetic video to the cockpit and missile guidance signals to the flight control surfaces.

The laser seeker has four acquisition modes available: Align, Slew, Scan and slave. In the Align mode, the seeker is caged to the boresight of the missile. Upon detection of a properly coded laser reflection, the Gimbal Position Indicator will commence flashing indicating the seeker has entered Correlation Mode. Upon activation of Slew Enable (see Missile Controller description), a lock-on will occur. In the Scan Mode the missile scans horizontally between the right and left scan limits (22° either side of boresight). Upon detection and correlation, a lock-on occurs auto-matically. The Slew Mode allows the aircrew to change the plane of scan to a desired elevation, using the aircraft MC. The seeker can be slewed 30° up, down, left, and right. Upon deactivation of Slew Enable, the seeker will scan approximately 22° either side of center at the selected elevation for elevations between ±20°. Beyond 20°, the seeker returns to 20° before scanning. In the Slave Mode, the seeker is positioned by the FLIR. An auto lock-on will not occur until the seeker detects a sufficient amount of reflected laser energy to enable the missile to guide to the target. Launch may be commanded any time after lock-on occurs.

3.12.2.1.2 AGM-65F Infrared (IR) Maverick. The IR missile guides autonomously, providing stand-off launch and leave capability. The IR Maverick allows operations during daylight, the hours of darkness, against camouflaged targets, and in some degraded weather conditions.

The AGM-65F contains an IR detector that converts IR energy into electrical signals. A digital computer converts these electrical signals into a TV-like picture

enabling the aircrew to identify and lock onto objects within the field-of-view of the seeker. Two selectable field-of-view (FOV) magnifications are available, Wide (WFOV) and Narrow (NFOV). WFOV provides the operator with increased target area orientation, while NFOV provides maximum launch ranges and improved target identification.

The IR missile can acquire and lock onto either a target that is warmer or cooler than its surrounding background. The aircrew can choose either hot-on-cold (HOC) or cold-on-hot (COH) to view and track either type of target respectively. The IR Maverick also provides two mode selections, LAND and SHIP, selectable with MPS, that maximize missile effectiveness. SHIP is designed for large unusual shapes, typical of ship targets and LAND is designed for smaller, point type targets.

The aircrew is able to control the IR seeker to within 2° of the physical limits of its gyro gimbals. These limits are ±42° in azimuth, 30° up and 54° down.

3.12.2.2 AGM-84 Standoff Land Attack Missile — Expanded Response. SLAM-ER is an air launched, air-breathing, planar wing cruise missile, that uses GPS (Global Positioning System) -aided inertial navigation and man-in-the-loop control via a radio frequency (RF) data link for terminal aimpoint control. The SLAM-ER is an over-the-horizon precision strike weapon operable in day/night and adverse weather conditions. The SLAM-ER is designed for use against high-value, fixed land targets, surface ships in port, and discriminatory standoff attack of surface ships at sea, fulfilling both Strike Warfare (STW) and Surface Warfare (SUW) roles.

The SLAM-ER missile is designed to provide an effective surgical strike capability for Pre-Planned (PP) targets and Targets-of-Opportunity (TOO). It is controlled by the Advanced Weapon Data Link (AWDL) System. The SLAM-ER AWDL system consists of the missile AWDL transmitter/receiver subsystem, the AWDL antenna contained in the missile, and the AWW-13 AWDL Pod.

3.12.2.2.1 SLAM-ER Pre-Planned Missions. Pre-planned missions are flown against LAND or SHIP targets having known stationary locations. Reconnaissance and other intelligence sources typically supply target location data. The required mission data is entered into the TAMPS SLAM-ER Mission Planning Module (MPM) and an integrated mission plan is generated. Because the aircrew has the TAMPS database of intelligence, mission data, and aircraft data from which to work, the PP mission allows a much more complex mission plan than a typical TOO mission. Pre-planned missions can have up to 7 waypoints, consisting of altitude or heading changes. While the missile will be programmed with the entire PP mission, MPS only displays a limited number of PP parameters to the aircrew and does not allow the parameters of a PP mission to be changed.

3.12.2.2.2 SLAM-ER Target-of-Opportunity Missions. Target of opportunity missions will be flown against Land and Anti Surface Warfare (ASUW) targets where minimum target information is available at preflight or not enough time is available to fully plan a mission using the TAMPS SLAM-ER Mission Planning Module.

The minimum targeting data for a LAND TOO mission is target latitude, longitude and elevation. The operator typically enters the targeting data. Mission data needed to complete the missile data load are provided as part of the TAMPS TOO mission plan. These mission data are displayed on the Target Parameters Page and are modifiable by the operator.

MPS allows the operator to select between LAND and ASUW TOO missions. For the S-3B, there are three major differences between Land and ASUW missions. First, for TOO LAND, elevation is calculated from GEOID height, so entry is allowed. Second, because of the high mobility of the ASUW Ship target, a missile midcourse correction capability is provided to the control aircraft. The mid-course update allows the controller aircraft to send updated target coordinates to the SLAM-ER to improve the probability that the ship will appear in the SLAM-ER seeker-field-of-view (FOV) at seeker turn on. If the S-3B is the controlling aircraft the target coordinates can be updated via the DISCOS MIDCOURSE UPDATE function. Lastly, video for the ASUW mission is initiated with wide FOV scanning across the missile course, to pan the target area. The scan rate and extent are determined by the missile based on a pre-launch target uncertainty entry, missile time of flight, and operator terminal commands.

3.12.2.2.3 SLAM-ER Automatic Target Acquisition (ATA). The ATA function of the properly equipped SLAM-ER missiles enable the Automatic Target Recognition Unit hardware in the

missile to match seeker video with planned target images and automatically guide to the evaluated aimpoints. However, the controller evaluates the performance of ATA on the display and may take control at any time during the terminal phase.

3.12.2.3 AN/AWW-13 Advanced Weapon Data Link (AWDL) Pod. The AWW-13 is used for post-launch man-in-the-loop control of the SLAM-ER. Two separate signals are used, one for missile control and one for video.

The pod, which can only be functionally carried on W6, receives 115 VAC, 400 Hz, 3-phase power from the primary ac bus. Each pod has forward and aft facing radomes. Inside the pod, there is a power supply, receiver, transmitter, signal processor and a VCR tape recorder to record the video from the IIR seeker of the SLAM-ER.

The S-3B is capable of carrying the AWW-13 to control a missile launched from its own aircraft or another aircraft in an attack group.

3.12.2.3.1 Advanced Missile Interface Box. The Advanced Missile Interface Box (AMIB) provides the primary interface and control for the MPS. It is mounted in the left internal avionics bay and is powered by the primary dc bus.

The AMIB generates the interfaces for the AGM-65 Maverick at the wing stations and is the bus controller on the MIL-STD-1553B Armament Bus. The Armament Bus is the major controlling interface to the AWW-13 pod at Wing Station 6 and SLAM-ER missiles at either or both wing stations. The armament Bus also serves as the means of communication between the AMIB and the ACDNU for operator interface to the missiles. In addition, the Armament Bus provides the AMIB to DDS interface to allow aircrew to load TAMPS pre-planned mission data from the DDS "brick" to SLAM-ER missile.

When the AMIB is installed, the following ARMCOS signals are routed through the AMIB to control Maverick and SLAM-ER launch: Pilot Trigger Switch and the Pilot Stores Release Switch. When either the Trigger Switch or the Store Release Switch is depressed the AMIB confirms that all conditions, including Master Arm ON, have been met for missile launch prior to issuing a release signal to the wing station decoder.

The AMIB also serves as a remote terminal on the Navigation Bus. The Navigation CDNU provides positional, attitude and time data to the AMIB for relay to the SLAM-ER during initial power-up or if power is interrupted to the AMIB or missile. The source of this data is dependent upon the mode of navigation that has been selected by the NAV CDNU. The AMIB also received updated target information from the Navigation Bus through the DISCOS MIDCOURSE UPDATE function.

3.12.2.3.2 AMIB/Maverick Plus System Initialization. MPS operation is controlled by the Stores Management Operational Program (SMOP) within the AMIB. The SMOP provides initialization, inventory control, launch and post-launch control of MPS stores.

Upon the application of power to the aircraft, the AMIB begins power-up processing, which includes initializing the AMIB software, executing Power-up BIT (PBIT) and determining the configuration of the MPS. The AMIB Reset Switch, a guarded, spring-loaded toggle switch located on the Missile Controller panel, can be used to interrupt power to the AMIB in the event of a SMOP hang-up.

Note

- The AMIB SMOP will occasionally hang-up, particularly on start-up and following SIM FLT. In this condition, the ACDNU stops responding to operator entrees. To regain control, AMIB power must be interrupted through the AMIB Reset Switch located on the Missile Controller or by cycling the AMIB Power circuit breaker.

- Restarting AMIB will cause the AMIB to initiate power-up processing. Control and selection of MPS stores will not be available for up to 3 minutes.

- If the AMIB is recycled via the AMIB Reset Switch or the AMIB PWR Circuit Breaker, the operator may be required to cycle to another CDNU page in order to regain control of the MPS.

PBIT conducts an end-to-end test of the AMIB to ensure proper functionality of the system. In the case where the ACDNU is not powered immediately, this end-to-end test will pause, waiting for ACDNU power-up, before proceeding with the remainder of the power-up routine.

The auto-configuration function of the AMIB SMOP determines whether SLAM-ER missile(s), and AWW-13 Pod, or Maverick missile(s) are mounted on the aircraft at wing stations 5 and 6. If SLAM-ER is detected, the AMIB applies power to the missile and the SLAM-ER(s) will begin its own PBIT. If a brick is inserted into the IRU during AMIB power-up processing, TAMPS mission data will be automatically loaded into the missile(s) via the AMIB.

3.12.2.4 Missile Controller. The Missile Controller (MC), located on the COTAC side console, provides the COTAC the capability for controlling the following:

1. Maverick Missile

2. OR-263 FLIR

3. AGM-84H/K SLAM-ER via the AWW-13 Pod.

Primary MC functions are to generate slewing commands for the Maverick seeker, for SLAM-ER in-flight seeker slewing via the AWW-13 pod, and for slewing of the OR-263 FLIR. The MC also has a capability of slewing a video cursor for use in the Stop Motion Aimpoint Update (SMAU) SLAM-ER targeting function. The MC generates the discrete signals to the AMIB for the system functions shown in Figure 3-21.

3.12.2.5 Digital Data Set. The digital data set (DDS), commonly called the mission data loader (MDL), comprises the CP-2092(D)/A interface receptacle unit (IRU) and the MU-1053/A data transfer module (DTM) or "brick." The interface receptacle unit is located in the left internal avionics bay. The data transfer module is a portable cartridge device that is inserted into the interface receptacle unit to load mission data into the SLAM-ER missile memory. The data transfer module is programmed externally to the aircraft using the Tactical Air Mission Planning System (TAMPS).

The DDS can also be used in an "offline" (without AMIB power) mode to load the operational program into the ACDNU.

3.12.2.6 Armament Control Display Navigation Unit. The primary interface between operators and the MPS is through the ACDNU (ACDNU), located on the center console (see Figure 3-22). The ACDNU display is controlled by the AMIB through the 1553B bus and provides details to the operators on the status of the MPS and MPS stores. When the MPS WRAs are not installed in the aircraft, a blank-off plate is installed in the ACDNU location. The basic control and operation conventions of the ACDNU are identical to those of the Navigation CDNU. For a detailed explanation of these conventions, see S-3B NATOPS Flight Manual.

There are several fixed keys, which provide the operator shortcuts to various pages on the ACDNU. Figure 3-23 provides a list of these shortcut keys and their function.

3.12.2.6.1 MPS Initialization. Indications of the status of the MPS and MPS stores are provided through the ACDNU display. Upon power-up through ON/OFF Switch, the ACDNU conducts a self-test. Following the self-test, the ACDNU will display the status of the MPS as provided by the AMIB. If the AMIB is not powered, malfunctioning, or in the initial stages of its own power-up processing, or if there is a 1553B communications problem between the AMIB and the ACDNU, the controller will receive the following message on the ACDNU display:

WAITING FOR AMIB

Otherwise, the ACDNU will initialize on the Stores Inventory Page.

Once the ACDNU has initialized, global alerts will be available to the operator regardless of the page displayed. They will appear on Line 6 of all ACDNU pages. Figure 3-45 provides a list of all global alerts and the required conditions to produce the alert.

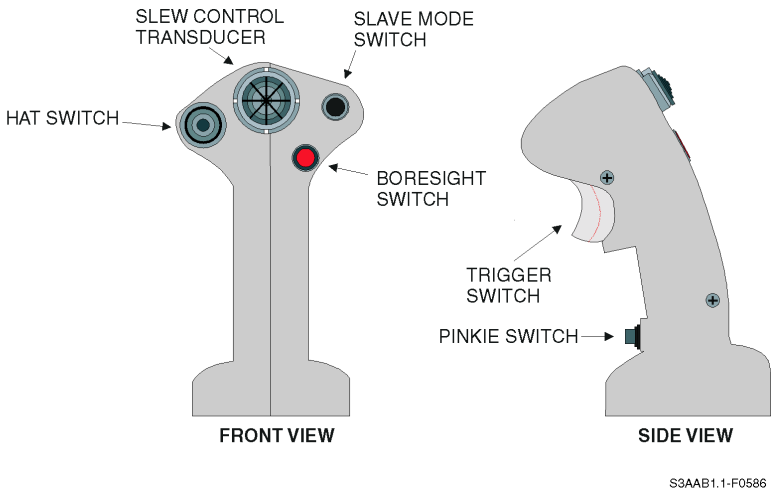

CONTROL FUNCTION	MAVERICK		SLAM-ER Pre-Launch	SLAM-ER Post-Launch
	IR	Laser		
Slew-Control Transducer BACK / FWD	w/Trigger 1st detent: FLIR Up/Down w/trigger 2nd detent: Seeker UP/DOWN		Point DOWN/UP	Point DOWN/UP
Slew-Control Transducer RIGHT/LEFT	Trigger 1st detent:FLIR Right/Left Trigger 2nd detent:Seeker Right/Left		Point RIGHT/LEFT	Point RIGHT/LEFT
Slew-Control Transducer IN	Uncage/Cage/ FOV Change (FOV change only w/trigger in 2nd detent)	Uncage/Cage	WPN XMIT Power On/Off Toggle	FOV Toggle
HAT Switch FWD	Undefined		Undefined	Undefined
HAT Switch BACK	Undefined		Take Control	Return to Search
HAT Switch LEFT	Undefined			Undefined
HAT Switch RIGHT	Undefined			SYNC On/Off Toggle
Slave Mode Switch	FLIR Slaving Toggle		Pod Antenna Fwd/Aft Toggle	Antenna Fwd/Aft Toggle
Boresight or Recessed Switch	BORESIGHT enable	BORESIGHT	WPN Power High/Low Toggle	Force Correlate
Trigger Switch Detent 1	FLIR Manual Slew Enable		FLIR Manual Override (w/ JOYSTCK selected)	Stabilized Slew/ Track/Breaklock
Trigger Switch Detent 2	Slew Seeker enable (Break-lock commanded at actuation. Lock-on commanded at release)	Slew Seeker enable (Seeker scan enabled at release)	Undefined	SMAU Control Enable
Pinkie Switch	Tracking Polarity Change (Hot/Cold)	Undefined	Weapon Transmitter Power High/Low Toggle	Polarity Hot/Cold Toggle

Figure 3-21. Missile Controller Functional Missile Assignments

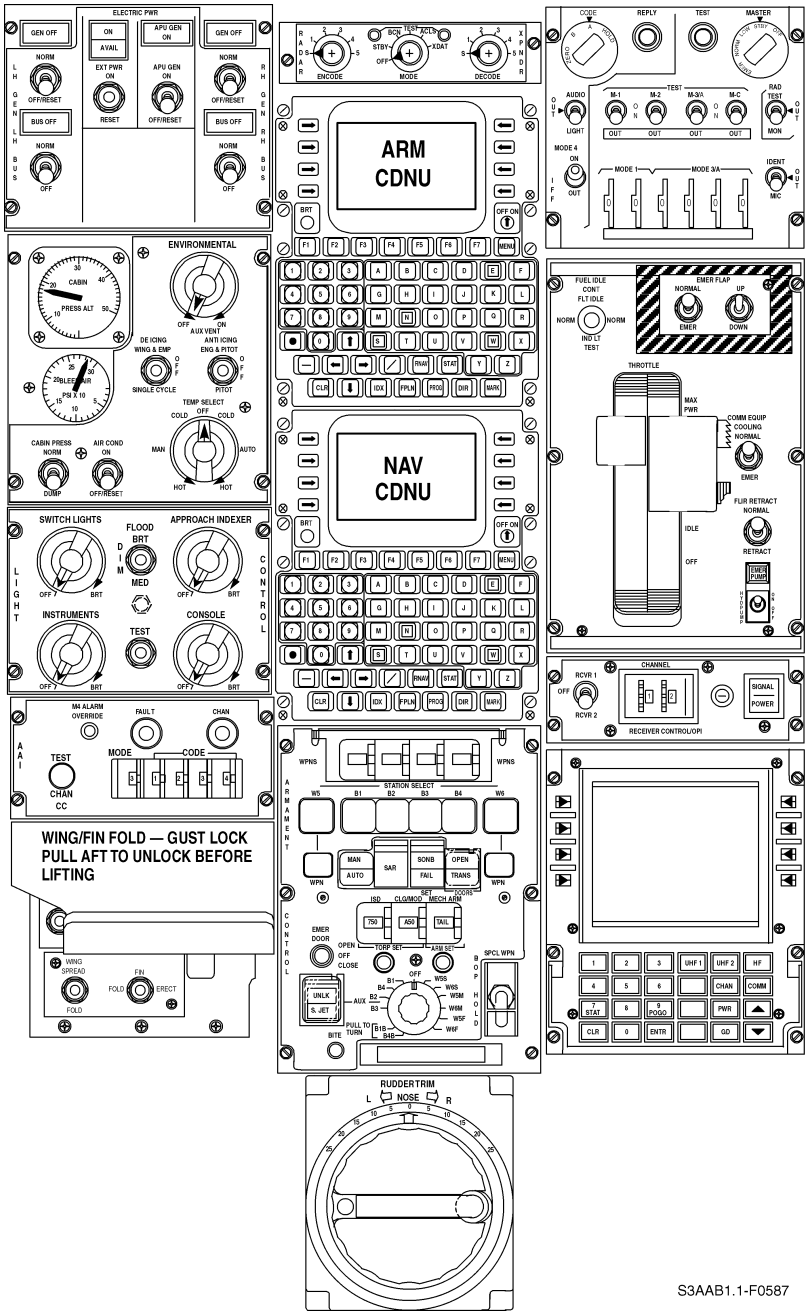

Figure 3-22. Armament CDNU Location on Pilot Center Console

Function Key	ACDNU Page Displayed
F1	STORES INVENTORY
F5	IRMAV, LMAV or SLAMR (W5)
F6	IRMAV, LMAV, PRE-LAUNCH POD, or SLAMR (W6)
MENU	MENU
IDX	INDEX
STAT	SYSTEM STATUS

Figure 3-23. ACDNU Function Key Allocation

3.12.2.6.2 Stores Inventory Page. The default page for the ACDNU upon system initialization is the Stores Inventory Page on which presence and basic status of any MPS is displayed (See Figure 3-24). The page can be accessed at any time during system operation by pressing the F1 key on the ACDNU.

It is also through this page that the operator accesses menu pages to prepare an MPS weapon for launch. If the ACDNU is turned on while the AMIB is conducting its power-up processing, the ACDNU will display the system progress to the operator. When a Maverick is loaded on either one or both wing stations, the AMIB will detect its presence and indicate to the operator that the variant type (IR or Laser) must be entered into the ACDNU. if a SLAM-ER is loaded, the ACDNU will indicate the progress of the missile self-test and mission loading.

3.12.2.6.3 Maverick Pages. The ACDNU Maverick pages allow for operator entries to ready Infrared (IR) and Laser-guided Maverick missiles for launch. The AMIB will present the correct page on the ACDNU per the operator entry on the Stores Inventory Page. If the type of missile is not selected for each station on which the missile is loaded, the Maverick page for that station will not be available.

The Maverick page is accessed via LSK 1 or LSK 5, from the Stores Inventory Page and F5 or F6 on the ACDNU, as appropriate, based on store location. Upon initial access to this page, the AMIB sends a cooling command to the selected Maverick missile and the timer will begin counting up from 0:00:00. Leaving the page will not affect the timer unless the operator deselects the missile (LFK 4).

CAUTION

- The AGM-65F will allow missile selection to ACTIVE mode (seeker video displayed) prior to the seeker gyro reaching full speed. To prevent possible damage to the missile seeker, no UNCAGE attempt should be made until three minutes have elapsed since initial power application to the seeker (weapon selection).

- The AGM-65E/F missile and CATM are both limited to 1 hour in the READY MODE (missile selected) with a 30 minute time limit in ACTIVE MODE (all video symbology present). The missile cools at half the rate it heats, resulting in regaining 1 minute of ACTIVE time for every 2 minutes the missile is returned to READY MODE (not to exceed the maximum 30 minute time limit). Additional READY MODE time is gained at the same rate by deselecting the missile.

The Maverick pages also advise the operator of the missile status (Ready, Armed, Not Ready).

The IR Maverick Page (see Figure 3-25) enables the operator to select between SHIP and LAND modes of the missile seeker. In addition, the operator can use this page to choose the method of FLIR slew control (TRACKBALL or JOYSTICK). Through the Laser Maverick Page (Figure 3-26) the operator can enter the laser code and select the method of FLIR slew control.

3.12.2.6.4 AWW-13 Datalink Pod (DL-13) Pages. Through the MPS DL-13 Pages, the operator prepares the AWW-13 for crew control of a SLAM-ER launched from own aircraft or by another aircraft. The Mission Assign page, which can be accessed via the Pre-Launch Pod Page, enables the crew to enter the mission data (missile channel and ID numbers and time-to-video) for up to four Pod control missions. If the aircraft is carrying a SLAM-ER, the data for the first mission will come from the brick.

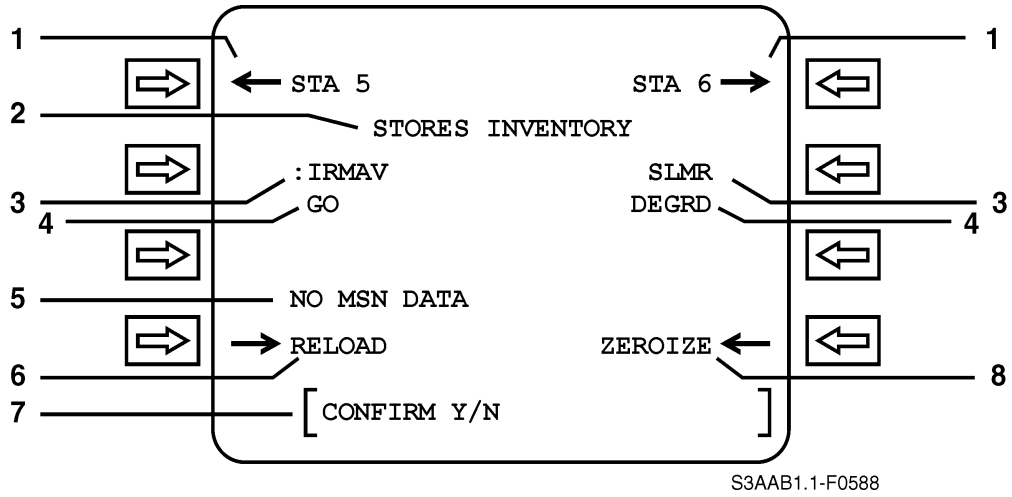

S3AAB1.1-F0588

INDEX	CONTROL/INDICATOR	FUNCTION
1	LFK 1	When arrow is present, allows user to proceed to menus for store loaded at Wing Station 5. **Note** F5 may be used to select station in lieu of LFK1.
	LFK 5	When arrow is present, allows user to proceed to menus for store loaded at Wing Station 6. **Note** F6 may be used to select station in lieu of LFK5.

Note

- For Maverick missiles, the arrow will not be present unless a GO is received by the AMIB from the missile and the operator has toggled LFK 2 to indicate that the missile loaded on that station is either IR or Laser.
- For SLAM-ER or DL-13, the arrow will be present after missile/pod has completed self-test and, for SLAM-ER, mission has transferred from brick. The arrow will not be present and the station will not be selectable if the missile/pod fails self test

2	Page Title	
3	LFK 2	Indicates type of MPS weapon detected at Wing Station 5. If weapon is Maverick, LFK is a toggle to select Maverick variant, LMAV or IRMAV. Crew must select type of Maverick for LFK 1 or F5 to be enabled.
	LFK 6	Indicates type of MPS weapon detected at Wing Station 6. If weapon is Maverick, LFK is a toggle to select Maverick variant, LMAV or IRMAV. Crew must select type of Maverick for LFK 5 or F6 to be enabled.

Note

If the AMIB is unable to automatically detect the type of store at a wing station, all operator actions will remain disabled and a status of “UNKNOWN” will be displayed for the type of store.

Figure 3-24. ACDNU Stores Inventory Page (Sheet 1 of 2)

INDEX	CONTROL/INDICATOR	FUNCTION
4	STORES ADVISORY	IRMAV: GO or NOGO. LMAV: GO or NOGO. SEARCHING — AMIB attempting to detect type of store. Dashes will be displayed at LFK 3 and 4 while AMIB searches SLMR: TESTING — SLAM-ER conducting self test TEST/XFER — SLAM-ER is conducting self test and transferring mission data from MDL to missile. DEGRD — SLAM-ER self test complete, missile has degraded capability. Details of missile degradation can be obtained on STATUS Page GO — SLAM-ER passed self test NO-GO — SLAM-ER failed self test. Details of missile component failures can be obtained on STATUS Page.
5	ALERT AREA	Global alerts displayed on this line. For a list of global alerts, see Figure 3-45.
6	LFK 4	RELOAD — Enables operator to reload the mission data into SLAM-ER missile(s). Option is displayed only if a status of XFER, GO, or DEGRD is displayed at line 4 for either station. **Note** Pressing RELOAD on STORES INVENTORY Page reloads mission data into both missiles if 2 SLAM-ERs are loaded. To reload mission data into one missile only select corresponding station using LFK 1 or LFK 5 (F5 or F6 may also be used to select station).
Note Pressing RELOAD on STORES INVENTORY Page reloads mission data to both wing stations if either a SLAM-ER and/or AWW-13 Datalink Pod are loaded on W5 and W6. To reload mission data into one station only, select the corresponding station using LFK 1 or LFK 5 (F5 or F6 may also be used to select station).		
7	Scratchpad	
8	LFK 8	ZEROIZE — Enables operator to erase previously loaded mission data from AMIB and SLAM-ER(s). Option is displayed only if a status of XFER, GO or DEGRD is displayed at Line 4 for either station. Operator must: 1. depress LFK 8 2. depress LFK 8 again to confirm ZEROIZE message. An asterisk will appear next to ZEROIZE, indicating function has been activated. Once an arrow reappears, ZEROIZE is complete.
Note • Failure to zeroize the SLAM-ER prior to aircraft shutdown will result in CONFIDENTIAL (crypto) and/or SECRET (ATA only) information being retained by the missile. • If a missile ZEROIZE attempt is unsuccessful indicated by the ERASE FAIL alert and it is still necessary to erase the data in the missile, the crew should either command a missile IBIT through the appropriate Test Page or cycle power to the AMIB using the AMIB Reset Switch on the Missile Controller. Either action will enable the crew to regain missile control, after which, ZEROIZE may be reattempted. • ZEROIZE only erases data from SLAM-ER and AMIB. To erase the brick, the operator must go to the DDS Page.		

Figure 3-24. ACDNU Stores Inventory Page (Sheet 2)

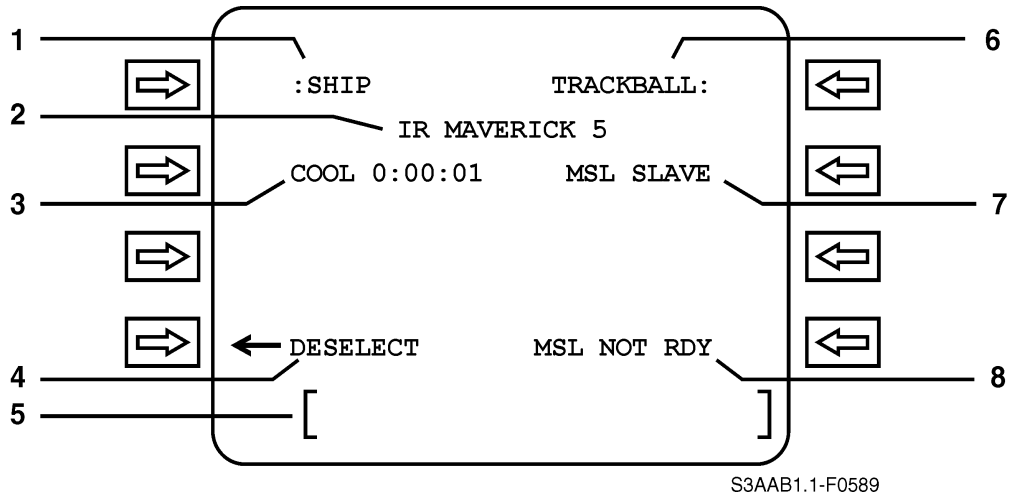

INDEX	CONTROL/INDICATOR	FUNCTION
1	LFK 1	SHIP/LAND toggle. Enables operator to select between the two missile tracking modes
		Note The AGM-65F provides two track modes, LAND and SHIP. LAND is optimized for small point targets and incorporates a square tracking gate. SHIP is optimized for irregularly-shaped, rectangular targets and utilizes a horizontally rectangular tracking gate. SHIP mode also incorporates a weighted centroid tracker to bias missile impact toward the target waterline, if detected, and Aspect Ratio Limiting (ARL) in the horizontal axis to allow continued centroid tracking in the terminal phase for more accurate impacts.
2	Page Title	
3	Missile Cooling Timer	Provides crew with duration that power to seeker cooling has been activated. Leaving the page will not affect the timer or actual missile cooling. Operator must deselect the missile via LFK 4.
		CAUTION • The AGM-65F will allow missile selection to ACTIVE mode (seeker video displayed) prior to the seeker gyro reaching full speed. To prevent possible damage to the missile seeker, no UNCAGE attempt should be made until three minutes have elapsed since initial power application to the seeker (weapon selection). • The AGM-65E/F missile and CATM are both limited to 1 hour in the READY MODE (missile selected) with a 30 minute time limit in ACTIVE MODE (video present). The missile cools at half the rate it heats, resulting in regaining 1 minute of ACTIVE time for every 2 minutes the missile is returned to READY MODE (not to exceed the maximum 30 minute time limit). Additional READY MODE time is gained at the same rate by deselecting the missile.
4	LFK 4	Deselects missile, deactivates seeker cooling, and presents Stores Inventory Page.
5	Scratchpad	
6	LFK 5	TRACKBALL/JOYSTICK toggle. Enables operator to select between DISCOS trackball and Missile Controller for FLIR slew control.

Figure 3-25. ACDNU IR Maverick Page (Sheet 1 of 2)

INDEX	CONTROL/INDICATOR	FUNCTION
		CAUTION Control of the FLIR turret at or near 0 to –1° elevation may result in loss of FLIR turret control, violent turret banging and permanent damage to the FLIR turret and converter. If turret oscillations occur, FLIR control should be toggled from JOYSTICK to TRACKBALL. If oscillations continue, the FLIR should be deselected. If oscillations cease, joystick control may be reattempted after first placing the FLIR near 0° azimuth and ≤ –1° elevation.
7	Missile Slave Indicator	MSL SLAVE (Steady) — Missile is slaved to FLIR position. MSL SLAVE (Flashing) — FLIR position is beyond gimbal limits. Blank — Missile not slaved.
8	Missile status	MSL RDY — Indicates that missile seeker has cooled and can be selected for launch. MSL NOT RDY — Missile has not reported MSL RDY to AMIB. The AMIB will report MSL NOT RDY during the cooling process. MSL ARM — The AMIB reports MSL ARM to the CDNU if it receives MSL RDY indications from the Maverick AND Master Arm Switch is ON.

Figure 3-25. ACDNU IR Maverick Page (Sheet 2)

The pre-launch Pod Page (Figure 3-27) is accessed either through F6, LFK 5 on the Stores Inventory Page or LFK 8 on the Post-Launch Pod Page. Through this page, the operator can activate pod power, choose datalink transmit power (HI/LO) and antenna position (AFT/FWD), and initiate SLAM-ER datalink power. In addition, the crew can select and view the mission number with the corresponding missile channel and ID. The Time-to-Video (TTV) function on this page enables the crew to enter a countdown time when missile video is expected to be available for missile control.

WARNING

Post launch control of SLAM-ER using the AWW-13 Data Link Pod requires the Post-Launch Pod page to be displayed on the ACDNU. No missile control will be available without this page selected on the CDNU. Operators shall verify that "POST LAUNCH POD 6" is displayed on the page.

WARNING

Pod control must be verified prior to video turn-on by exercising a pod command such as SYNCH ON/OFF or an antenna recycle to ensure the MPS has maintained connectivity to the pod. Recommended timeframe for verification is within 5 minutes of video turn-on to allow for possible pod power recycle, AMIB reset and/or uncertainty in video turn-on time. Failure to verify pod control may result in failure to achieve terminal control of SLAM-ER.

Note

Time-to-video is advisory in nature only. Missile video will be activated when commanded by the missile guidance program.

Through this page, the operator accesses the Post-Launch Pod Page (LFK 8).

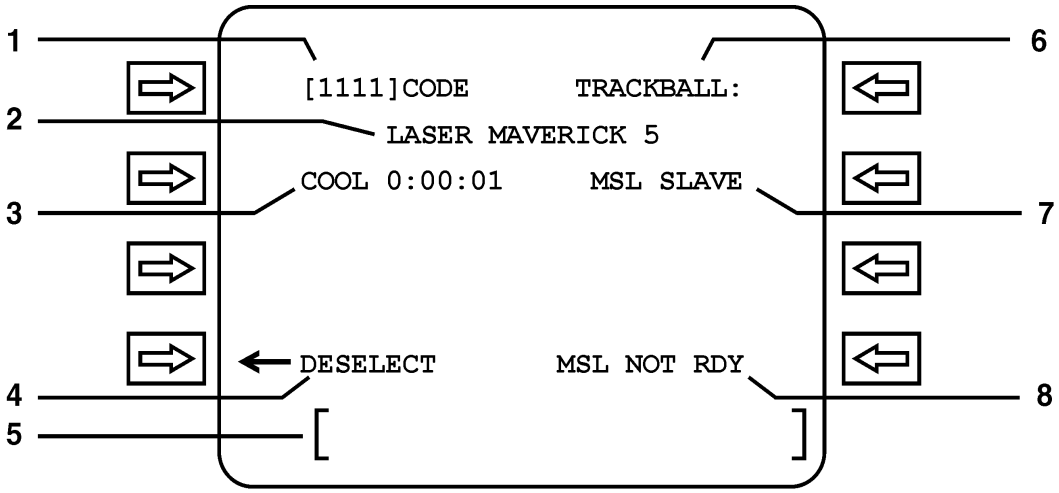

S3AAB1.1-F0590

INDEX	CONTROL/INDICATOR	FUNCTION
1	LFK 1	When brackets are present, enter the desired code into the scratchpad and press LFK 1. The code will be displayed on Line 1 inside the brackets and erased from the scratchpad, indicating that the code has been sent to the AMIB. The entered code should also be shown on the AMLCD.

WARNING

Laser Maverick laser codes entered via the MPS CDNU shall be confirmed against the Laser Maverick video display. If the two codes do not match, cycling out of the active LMAV page using F1 or other display page and back into the LMAV page should allow proper input of the codes. If the codes still do not agree, ACDNU entry of the video display code should re-synch the codes and allow re-entry of the desired code.

Note

- Sequential entries of identical laser codes into the MPS CDNU is not possible and may result in the AMLCD displayed laser code continually cycling through codes. If this occurs, operator should access a different page, return to LMAV Page, and then enter a different laser code from the last entered code.
- A “C” may follow laser codes displayed on the MPS display. This character is used to indicate a countermeasures-enhanced code for other Maverick variants and does not apply to the AGM-65E. The appearance or lack thereof, in no way affects the targeting of the AGM-65E.
- Laser Maverick missiles may require up to 3 minutes of warm up time after operator entry of a laser code. Aircrew should take into account this time requirement for operational employment of the missile.

2	Page Title	
3	Missile Cooling Timer	Provides crew with duration that power to seeker cooling has been activated. Leaving the page will not affect the timer or actual cooling. Operator must deselect the missile via LFK 4.

Note

The AGM-65E/F missile and CATM are both limited to 1 hour in the READY MODE (missile selected) with a 30 minute time limit in ACTIVE MODE (video present). The missile cools at half the rate it heats, resulting in regaining 1 minute of ACTIVE time for every 2 minutes the missile is returned to READY MODE (not to exceed the maximum 30 minute time limit). Additional READY MODE time is gained at the same rate by deselecting the missile.

Figure 3-26. ACDNU Laser Maverick Page (Sheet 1 of 2)

INDEX	CONTROL/INDICATOR	FUNCTION
4	LFK 4	Deselects missile, deactivates seeker cooling.
5	Scratchpad	Keyset entries for laser code entry are entered here. To complete entry, operator must depress LFK 1. If the entry is not in the correct format, the ACDNU will alternately display the entered value in the scratchpad with the message "INVALID ENTRY."
6	LFK 5	TRACKBALL/JOYSTICK toggle. Enables operator to select between DISCOS trackball and Missile Controller for FLIR slew control.
CAUTION Control of the FLIR turret at or near 0 to –1° elevation may result in loss of FLIR turret control, violent turret banging and permanent damage to the FLIR turret and converter. If turret oscillations occur, FLIR control should be toggled from JOYSTICK to TRACKBALL. If oscillations continue, the FLIR should be deselected. If oscillations cease, joystick control may be reattempted after first placing the FLIR near 0° azimuth and ≤ –1° elevation.		
7	Missile Slave Indicator	MSL SLAVE (Steady) — Missile is slaved to FLIR position. MSL SLAVE (Flashing) — FLIR position is beyond gimbal limits. Blank — Missile not slaved.
8	Missile status	MSL RDY — Indicates that missile seeker has cooled and can be selected for launch. MSL NOT RDY — Missile has not reported MSL RDY to AMIB. The AMIB will report MSL NOT RDY during the cooling process. MSL ARM — The AMIB reports MSL ARM to the CDNU if it receives MSL RDY indications from the Maverick AND Master Arm Switch is ON.

Figure 3-26. ACDNU Laser Maverick Page (Sheet 2)

The display and functions of the Post-Launch Pod Page is similar to that of the Pre-Launch Pod Page (Figure 3-28). There are some notable exceptions. TTV cannot be changed on the Post-Launch Page. Instead, depressing LFK 4 begins the TTV countdown. Antenna position is only displayed on this page. The operator must use the MC or return to the Pre-Launch Page to change it. The Channel and ID of the missile to be controlled can also be changed here. Lastly, the Post-Launch Page enables the operator to turn on and off pod/missile synchronization.

Note

The operator must have either the Pre-Launch Pod Page or Post-Launch Pod Page selected to control a SLAM-ER missile. However, post-launch MITL commands are only available from the post-launch page.

3.12.2.6.5 SLAM-ER Page. Through the SLMR Page (Figure 3-29), the aircrew is able to select and deselect the missile, change the assigned mission and reload mission data. In addition, the SLMR page enables the operator to view the current missile status, including any continuous built-in-test alerts.

3.12.2.6.6 SLAM-ER Target Parameters, Launch Parameters and Mission Data Pages. SLAM-ER target and launch parameters for both pre-planned (PP) and Target of Opportunity (TOO) missions are viewable through the Target and Launch Parameters Pages. PP mission parameters, which are loaded from the brick, are not modifiable. If the crew does not program any TOO parameters into the brick during mission planning, TAMPS will enter default parameters which are modifiable by the crew via the ACDNU keyset. If TOO ASUW is selected, target elevation is set at 0 ft. and is not modifiable.

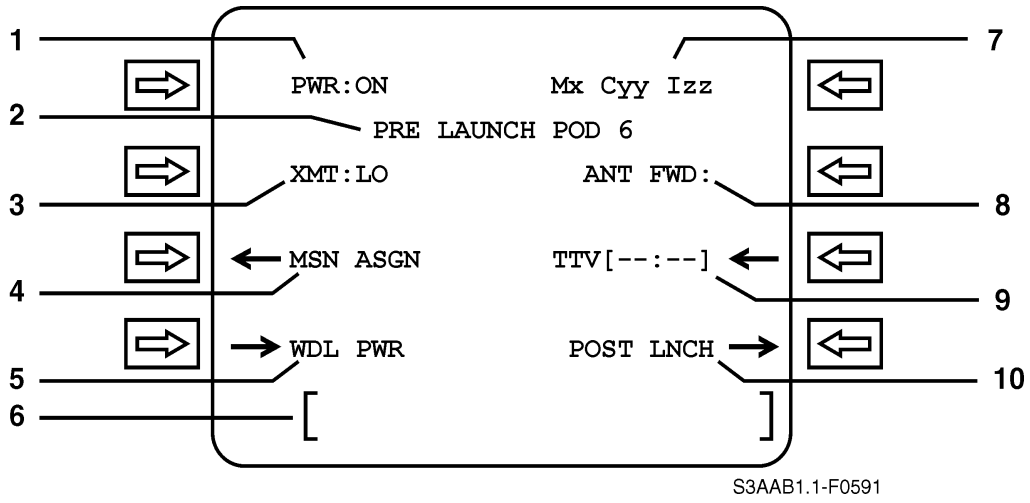

INDEX	CONTROL/INDICATOR	FUNCTION
1	LFK 1	Pod Power Toggle. The default condition is OFF. With POD Power OFF, only LFK 8 is active. All other functions become available after Pod power is toggled to ON.
Note A 5-second delay will be experienced when toggling Pod Power from OFF to ON while the AMIB receives the Pod status. No delay should be experienced when toggling Pod Power from ON to OFF. However, the pod is not off until video is removed from the AMLCD, indicating that the internal pod tape has been dethreaded.		
2	Page Title	
3	LFK 2	Pod Antenna Transmit Power Toggle XMT: LO — Pod will transmit in the low power mode when datalink activated. XMT: HI — Pod will transmit in the high power mode when datalink activated.
4	LFK 3	Depressing key displays Pod Mission Assign Page
5	LFK 4	Weapon Datalink Power — Enables crew to activate weapon datalink. Upon pressing LFK 4, an asterisk will appear for 3 seconds to indicate acceptance of operator action. Repeats actions performed using MC.
WARNING A four-foot radiation hazard standoff shall be maintained by ground personnel from both ends of the AWW-13 pod and the aft end of the SLAM-ER during ground marriage checks.		
6	Scratchpad	

Figure 3-27. Pre-Launch Pod Page (Sheet 1 of 2)

INDEX	CONTROL/INDICATOR	FUNCTION
7	LFK 5	Mission Toggle. Pressing LFK cycles through preset missions defined by user on Pod Mission Assign Page. M = Mission, C = Channel, I = ID.
8	LFK 6	Forward/Aft Antenna Toggle. Enables the operator to switch between the forward and aft pod antenna. Default is forward antenna. Repeats actions performed using MC.
9	LFK 7	Time-to-video. Operator enters time as “mmss” via scratchpad and presses LFK to enter TTV for the selected mission. If the entry is in the incorrect format, INVALID ENTRY will appear in the scratchpad. **Note** Time-to-video may only be entered while counter is not running (activated on the Post-Launch Pod Page).
10	LFK 8	Depressing key displays Post-Launch Page.

Figure 3-27. Pre-Launch Pod Page (Sheet 2)

The operator can cycle between the Target and Launch Parameters (Figures 3-30 and 3-31), respectively) pages by using the left-right scroll keys on the ACDNU. There are five pages of target parameters and two of launch parameters. The scroll up-down arrows on the ACDNU are used to access all of the pages.

The operator can only view the Launch and Target Parameters of a mission that has been confirmed on the SLAMR Page. To view additional missions, the operator must return to the SLAMR Page, depress CHG MSN, toggle to a different mission, and confirm the new mission.

3.12.2.6.7 System Status Pages. The ACDNU System Status Pages (Figures 3-32 through 3-34) provide the crew with the Continuous Built-in-Test (CBIT) results for the ACDNU, DDS, interface with the Navigation Bus (NAV), AMIB, and a SLAM-ER or AWW-13 on W5 and/or W6. Pressing the STAT button on the ACDNU accesses the System Status Page. The condition of each subsystem of MPS is displayed on the main Status Page. Further details can be obtained by pressing the appropriate LSK.

CBIT results for the ACDNU and DDS are displayed as a bit string of 16 bits with each bit representing a separate subsystem monitored by CBIT. Whereas, the individual system status pages for the AMIB, SLAMR and DL-13 provide failure indications through which the operator can scroll.

Each status page provides the operator with the capability to disable CBIT failure from initiating ✓STATUS alerts. In addition, a counter exists on each page that registers the number of times that CBIT has detected a failure. The aircrew can reset the counter to 0 by pressing LSK 5.

3.12.2.6.8 System Test Pages. These pages provide access to the operator-initiated BIT (IBIT) pages for each device on the 1553 armament bus and for pre-flight function test of the Missile Controller. The most recent test result of IBIT is displayed on the System Test Page and the test page for each device. Since IRMAV and LMAV do not provide IBIT capabilities, there are no test pages for these stores and dashes are displayed in lieu of status.

Initiation of an AMIB IBIT requires confirmation by the operator because following completion of the test the AMIB ceases processing. Therefore, after the IBIT is complete, the operator must cycle AMIB power to regain control. MPS will not be available for approximately 3 minutes after cycling power.

Representative examples of each page are provided in Figures 3-35 through 3-38.

3.12.2.6.9 Index Page. The Index page (Figure 3-39) allows the operator to access the System Test page, the DDS page (Figure 3-40), and, if an AWW-13 Datalink Pod is on W6, the Mission Assign page (Figure 3-41).

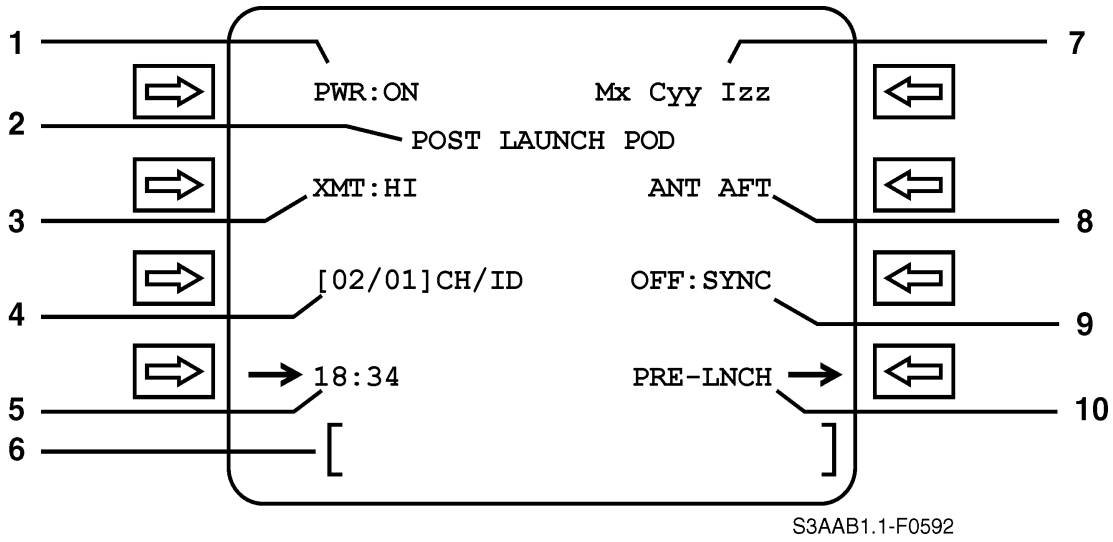

INDEX	CONTROL/INDICATOR	FUNCTION
1	LFK 1	Pod Power Toggle. The default condition is OFF. With POD Power OFF, only LFK 8 is active. All other functions become available after Pod power is toggled to ON.

WARNING

Pod control must be verified prior to video turn-on by exercising a pod command such as SYNCH ON/OFF for an antenna recycle to ensure the MPS has maintained connectivity to the pod. Recommended timeframe for verification is within 5 minutes of video turn-on to allow for possible pod power recycle, AMIB reset, and/or uncertainty in video turn-on time. Failure to verify pod control may result in failure to achieve terminal control of SLAM-ER.

Note

A 5-second delay will be experienced when toggling Pod Power from OFF to ON while the AMIB receives the Pod status. No delay should be experienced when toggling Pod Power from ON to OFF. However, the pod is not off until video is removed from the AMLCD, indicating that the internal pod tape has been dethreaded.

2	Page Title	
3	LFK 2	Pod Antenna Transmit Power Toggle. This function key enables operator to choose datalink transmit power. XMT: LO — Pod will transmit in the low power mode when datalink activated. XMT: HI — Pod will transmit in the high power mode when datalink activated.
4	LFK 3	Channel/ID. The AMIB will send default values for CH/ID, which are taken from Mission Assign Page for the selected mission. Channel and ID may also be entered by the operator.

Figure 3-28. Post-Launch Pod Page (Sheet 1 of 2)

INDEX	CONTROL/INDICATOR	FUNCTION
5	LFK 4	TTV (Time-to-Video). The AMIB will send default values for TTV, which is taken from the Mission Assign Page for the selected mission. TTV may also be entered by the operator. Pressing LFK with a valid entry (correct format of “mmss”) in scratchpad will change TTV. Pressing LFK with no entry in scratchpad begins TTV countdown timer.
6	Scratchpad	
7	LFK 5	Mission Toggle. Pressing LFK cycles through preset missions defined by user on Pod Mission Assign Page. M = Mission, C = Channel, I = ID.
8	Antenna Display	Display is repeated from Pre-Launch Pod Page. To change, operator must return to Pre-Launch Pod Page and press LFK 6 to change antenna via the ACDNU. The MC may be used to perform the same function. Repeats actions made with MC.
9	LFK 7	Synch ON/OFF Toggle. Default condition is OFF. Turns Pod/ Missile synchronization signal on and off. Repeats actions made with MC.
10	LFK 8	Depression of key cycles ACDNU to Pre-Launch Pod page.

Figure 3-28. Post-Launch Pod Page (Sheet 2)

Through the DDS page, the operator can view the name assigned to the mission load in the current brick installed in the IRU.

The Mission Assign page enables the crew to input missile channel and ID numbers and time-to-video for four separate missions.

3.12.2.6.10 MPS Tactical Displays. Only the AMLCD-type displays are functional for viewing MPS video. The pilot, COTAC and TACCO are able to view Maverick, SLAM-ER and POD video. MPS directs the video signals directly from the store o the wing station to the pilot and COTAC. For the operators at these stations to view MPS video, AGM (Air-to-Ground Missile) must be selected. Because of signal synchronization problems, the AGM selection on the TACCO display is not usable. The TACCO must select TV VID to view MPS video. Figures 3-42 through 3-44 are examples of SLAM-ER, LMAV, and IRMAV video presentations.

3.13 KILL STORES ON-LINE CONTROL

When operating in the automatic mode, the selection, arming, processing, quantity, spacing, and release commands are sent to the computer from the COTAC, TACCO, or SENSO from the INCOS trays. The pilot’s STORES switch (on the control stick) is inoperative with on-line selection of conventional kill stores.

Multiple and single weapons can be released by one of two methods when operating in the automatic mode:

1. Operator released by either COTAC, TACCO, or SENSO.

2. Computer released upon capture of a weapon FTP, except for Harpoon missiles.

Note

- For a Harpoon missile release, the weapon FTP is used only for aircraft steering.

- The TORP PRESET switch must be in the ON position for on-line selection of any kill stores, including wing stations. When the TORP PRESET switch to OFF, ARMCOS is defective in system status, and will not reinitialize, preventing the on-line selection, arming, and release of any ordnance.

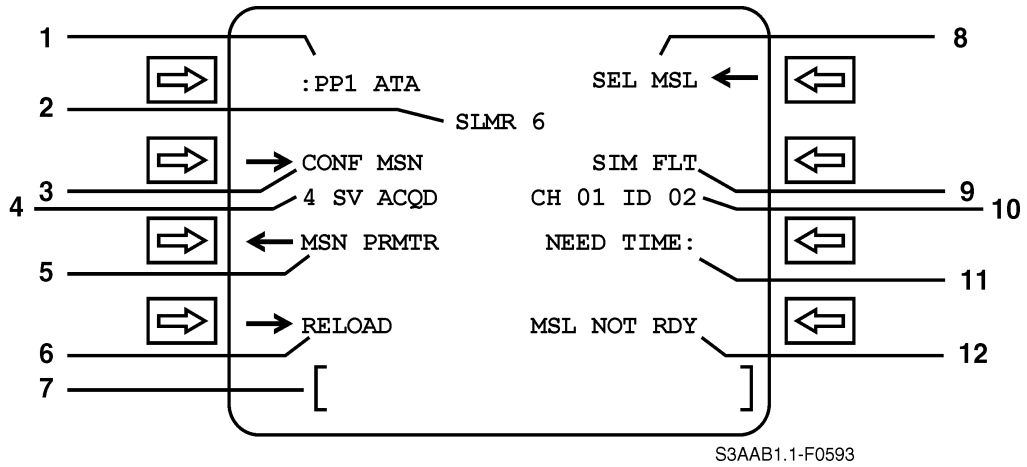

INDEX	CONTROL/INDICATOR	FUNCTION
1	LFK 1	SLAM-ER Mission Toggle. Depressing LFK 1 allows operator to cycle through available missions. Once a mission has been confirmed through depression of LFK 2, the colon will disappear and LFK 1 will be disabled.
2	Page Title	
3	LFK 2	CONF MSN — Enables operator to confirm mission selected by LFK 1. Following selection, mission parameters will become available at LFK 3, LFK 2 will change to CHG MSN. CHG MSN — Enables the operator to change the selected mission for SLAM-ER. Pressing LFK 2 reactivates LFK 1 Mission Toggle.
4	Missile Satellite Display	Provides crew with readout of number of GPS satellites (maximum of four) acquired by SLAM-ER receiver.
5	LFK 3	MSN PRMTR — LFK is enabled only after SLAM-ER mission is confirmed. Parameters displayed are only of confirmed mission for selected missile/station. Depressing button displays Target Parameters Page.
6	LFK 4	RELOAD — Depressing LFK 4 reloads mission data from the current brick in the DDS into the selected missile. If a pod is loaded on W6, the missile channel and ID will be also be reloaded into the pod for the first mission.
7	Scratchpad	
8	LFK 5	Missile selection toggle. SEL MSL — Selects missile, activating missile internal navigation systems and enabling Sim Flight mode (LFK 6). DESEL MSL — Deselects missile. Missile navigation system is de-activated. Missile CBIT remains available.
9	LFK 6	SIM FLT — Enables operator to put selected missile into Sim Flight mode. Function is only available if missile is selected (LFK 5) and missile status is not MSL NOT RDY or MSL ARM. SIM TERM — Terminates Sim Flight mode.
10	LFK 7	Missile Channel and ID.

Figure 3-29. ACDNU SLMR Page (Sheet 1 of 2)

INDEX	CONTROL/INDICATOR	FUNCTION
11	LFK 7	Missile Failure Status. A colon will follow the failure if more than one failure exists. Operator may toggle through failure list by depressing LFK. MSL NOGO (Critical Hardware Failure) NO GPS (Minimum GPS data not received) NO KEYS (No GPS keys) NO ENVRON (Minimum environmental data not received) NO MSN (No valid mission loaded) SEL WPN (Weapon not selected) IN TEST (BIT in progress) NO ADS (Air data bit failed) NO TA (Minimum transfer alignment data not available) ATA XFER (ATA transfer in progress) NEED TIME (Need accurate time/date message).
12	Missile Status	MSL NOT RDY — Missile has not been selected or an operational failure of the missile has occurred since selection. MSL RDY — Missile has passed self-test, has been selected on the ACDNU and mission has been selected. MSL ARM — Missile is ready and AMIB has detected that Master Arm Switch is in the ARM position.
Note A missile status of MSL ARM precludes the operator from changing the pre-planned mission or commanding SIM FLT.		

Figure 3-29. ACDNU SLMR Page (Sheet 2)

The pilot can prevent an automatic mode release if he/she:

1. Selects the MAN mode on the ACP
2. Turns the MASTER ARM switch OFF (see FO-1)
3. Lowers the landing gear
4. Closes the bomb bay doors (if the selected weapon is located in the bomb bay).

3.13.1 Armament Control Subprogram Interface. The ARMCOS interfaces with six other subprograms. Figure 3-46 describes the type and the purpose of data provided to the ARMCOS.

3.13.1.1 Weapon Selection. Weapon selection (except forward firing stores) can be initiated by the COTAC, TACCO, and SENSO.

The initiating operator can select weapons, one type at a time, at the bomb bay and wing stations.

WARNING

For aircraft not incorporating AFC-283, on-line selection of weapons loaded on TERs will cause the BRU-11 rack to unlock. On-line selection and release of weapons from wing stations shall be limited to ordnance loaded on parent racks only.

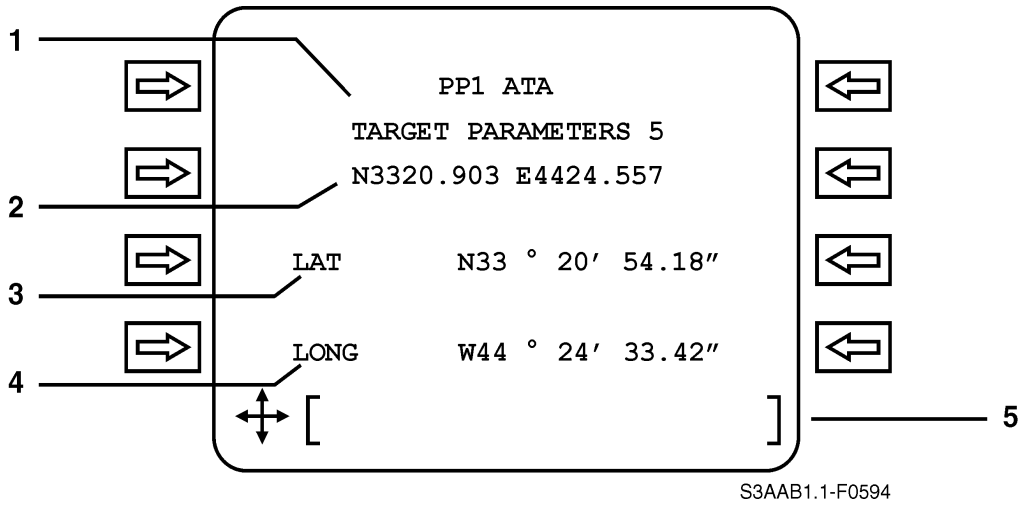

INDEX	CONTROL/INDICATOR	FUNCTION
1	Page Title	Identifies mission type (PP or TOO — LAND/TOO — ASUW), mission number if PP, page title and wing station.
Note Parameters displayed on Launch and Target Parameters Pages are from confirmed mission, only. To view alternate mission parameters, the operator must change mission on the SLMR Page.		
2	Target Latitude/Longitude	Degrees (dddmm.mmm). If mission is TOO, brackets will surround entry, indicating that value is modifiable.
3	Target Latitude	Degrees (ddmmss.ss). If mission is TOO, brackets will surround entry, indicating that value is modifiable.
4	Target Longitude	Degrees (dddmmss.ss). If mission is TOO, brackets will surround entry, indicating that value is modifiable.
Note CDNU displayed values for both TOO and PP missions will vary slightly from both TAMPS and operator input values due to rounding and conversion of units. Displayed numbers will not affect system accuracy or operation. Parameters received by the missile will match TAMPS/operator input values regardless of ACDNU displayed values.		
5	Scratchpad	For TOO entries, enter value using ACDNU keys, then depress LFK.

Figure 3-30. Target Parameters Page (Sheet 1 of 5)

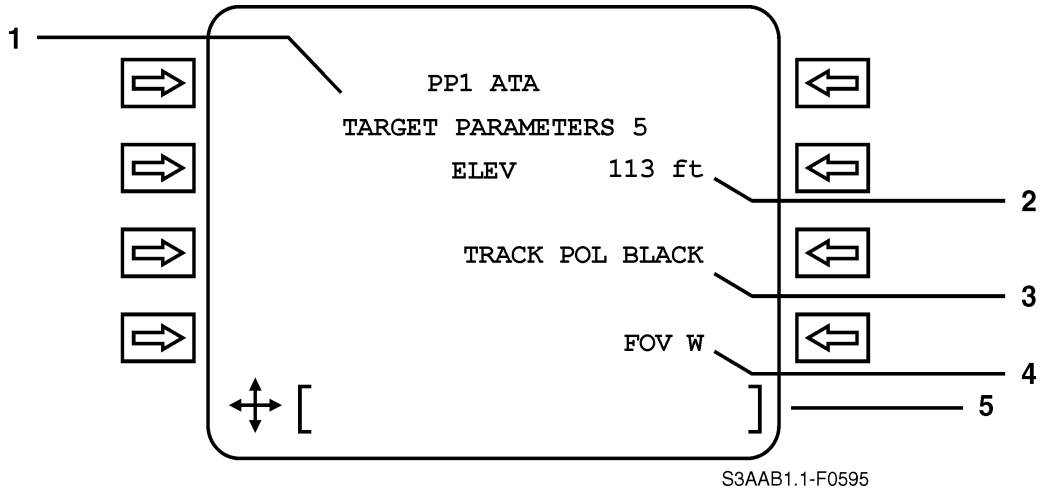

INDEX	CONTROL/INDICATOR	RANGE OF VALUES
1	Page Title	Identifies mission type (PP or TOO — LAND/TOO — ASUW), mission number if PP, page title and wing station.
2	Target Elevation	Feet , –500 to +32767. If mission is TOO LAND, brackets will surround entry, indicating that value is modifiable. If mission is TOO ASUW, dashes are displayed.
Note Target elevation displayed on ACDNU will differ from the TAMPS input values due to GEOID height translation factors. Elevation sent to SLAMR is the TAMPS/operator input value.		
3	Target Initial IR tracker polarity	WHITE — Hot BLACK — Cold If mission is TOO, a colon will follow display, indicating that value can be changed through LFK 7 toggle.
4	Seeker Initial Field of View	Wide (W) or Narrow (N). If mission is TOO, a colon will follow display, indicating that value can be changed through LFK 8 toggle.
5	Scratchpad	For TOO entries, enter value using ACDNU keys, then depress LFK.

Figure 3-30. Target Parameters Page (Sheet 2)

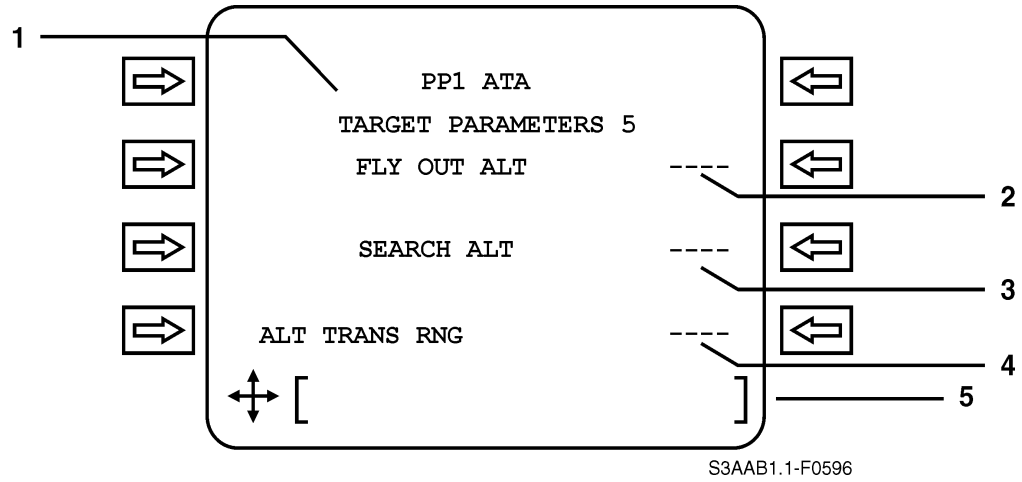

INDEX	CONTROL/INDICATOR	RANGE OF VALUES
1	Page Title	Identifies mission type (PP or TOO — LAND/TOO — ASUW), mission number if PP, page title and wing station.
2	SLAM-ER Initial Fly-out Altitude	Feet — MSL, –500 to +32767. If mission is PP, dashes are displayed. If mission is TOO, brackets will surround entry, indicating that value is modifiable.
3	SLAM-ER Search Altitude	Feet — MSL, –500 to +32767. If mission is PP, dashes are displayed. If mission is TOO, brackets will surround entry, indicating that value is modifiable.
Note The fly-out altitude may not be greater than the engine start altitude, and no greater than 500 feet below the minimum launch altitude. The fly-out altitude may not be less than the search altitude.		
4	Altitude Transition Range	Nautical Miles, 0 to 302. If mission is PP, dashes are displayed. If mission is TOO, brackets will surround entry, indicating that value is modifiable.
5	Scratchpad	For TOO entries, enter value using ACDNU keys, then depress LFK.

Figure 3-30. Target Parameters Page (Sheet 3)

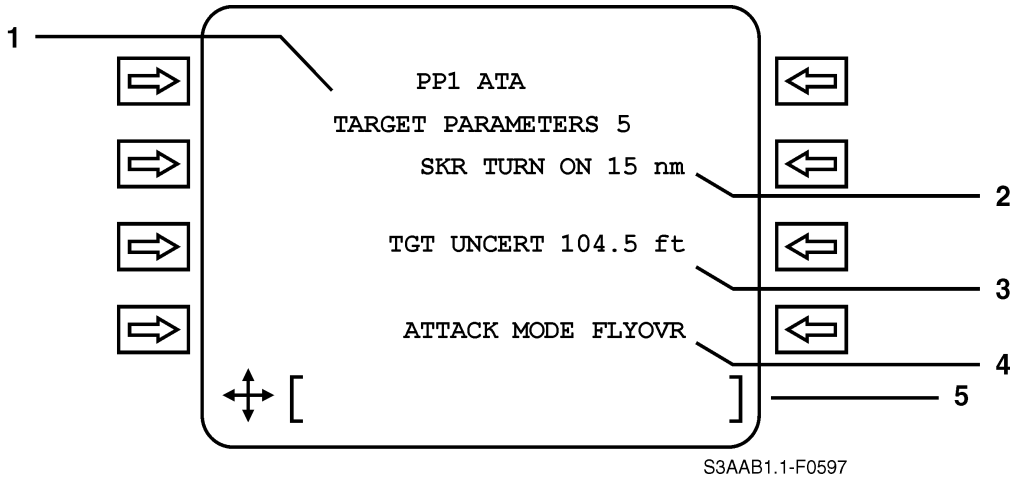

INDEX	CONTROL/INDICATOR	RANGE OF VALUES
1	Page Title	Identifies mission type (PP or TOO — LAND/TOO — ASUW), mission number if PP, page title and wing station.
2	Seeker Turn-on Range	Range from target at which video turns on. Nautical miles, 0 to 999.5. If mission is TOO, brackets will surround entry, indicating that value is modifiable.
WARNING S-3B MPS software will allow the operator to enter TOO mode (Land and ASUW) seeker turn on ranges greater than the TAMPS limit. The missile will attempt to turn the seeker on at the value entered by the operator, possibly resulting in missile battery depletion prior to impact. Therefore, seeker turn-on ranges greater than 15 nmi shall not be entered.		
3	Target Uncertainty	Feet, 0 to 20000 (LAND), 0 to 99999 (ASUW). If mission is TOO, brackets will surround entry, indicating that value is modifiable.
Note Target uncertainty displayed will differ from the TAMPS values. MPS takes TAMPS values and applies a1 sigma criteria. Target uncertainty directly affects the ASUW seeker scan strategy. If the number entered is too small, the operator may never have a chance to see a target (i.e., PACQ = 0). If number entered is inappropriately too large, the seeker will scan such a large area that it may move too quickly to allow target acquisition.		
4	Attack Mode	IMPACT, FLYOVR. If mission is TOO, a colon will follow display, indicating that value can be changed through LFK 8 toggle. Determines whether missile will fly over or impact target position is no terminal target designation is made.
5	Scratchpad	For TOO entries, enter value using ACDNU keys, then depress LFK.

Figure 3-30. Target Parameters Page (Sheet 4)

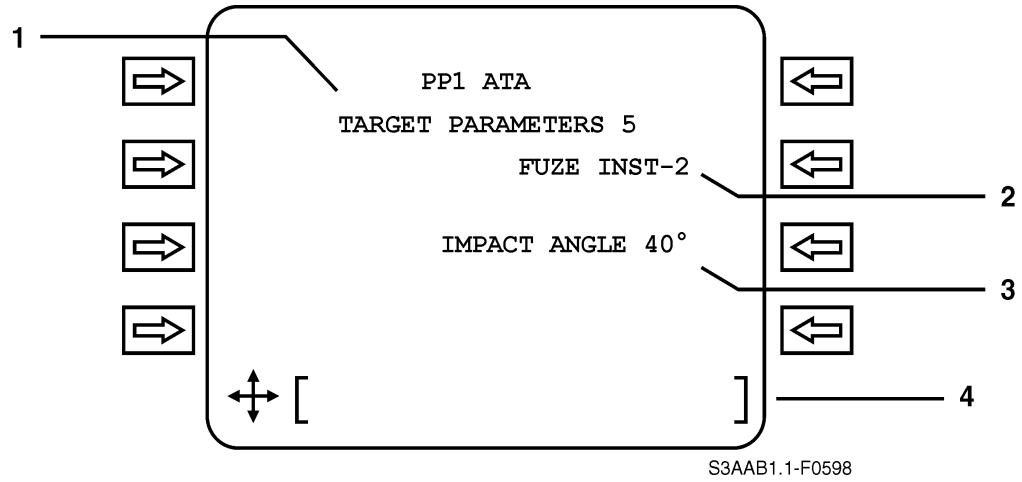

INDEX	CONTROL/INDICATOR	RANGE OF VALUES
1	Page Title	Identifies mission type (PP or TOO — LAND/TOO — ASUW), mission number if PP, page title and wing station.
2	Fuze Delay	DELAY 1-30 — Provides delay 1 fuzing. DELAY 2-60 — Provides delay 2 fuzing. INST-2 — Provides instantaneous fuzing. If mission is TOO, a colon will follow display, indicating that value can be changed through LFK 6 toggle.
3	SLAM-ER Impact Angle	Degrees, 0 to 90. If mission is TOO LAND, brackets will surround entry, indicating that value is modifiable. If mission is TOO ASUW, dashes are displayed.
CAUTION Operator entered SLAM-ER TOO impact angles greater than 60° may result in missile failure. Operators shall limit impact angle entries to no more than 60°.		
4	Scratchpad	For TOO entries, enter value using ACDNU keys, then depress LFK.

Figure 3-30. Target Parameters Page (Sheet 5)

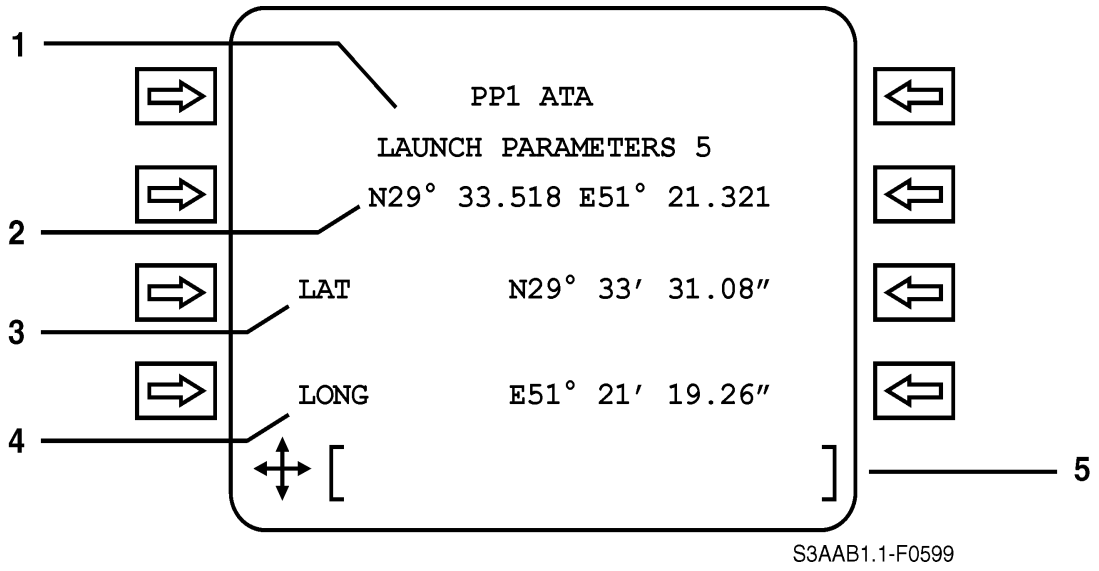

INDEX	CONTROL/INDICATOR	RANGE OF VALUES
1	Page Title	Identifies mission type (PP or TOO — LAND/TOO — ASUW), mission number if PP, page title and wing station.
2	Launch Latitude/Longitude	Degrees (dddmm.mmm).
3	Launch Latitude	Degrees (ddmmss.ss).
4	Target Longitude	Degrees (dddmmss.ss).
5	Scratchpad	

Figure 3-31. Launch Parameters Page (Sheet 1 of 2)

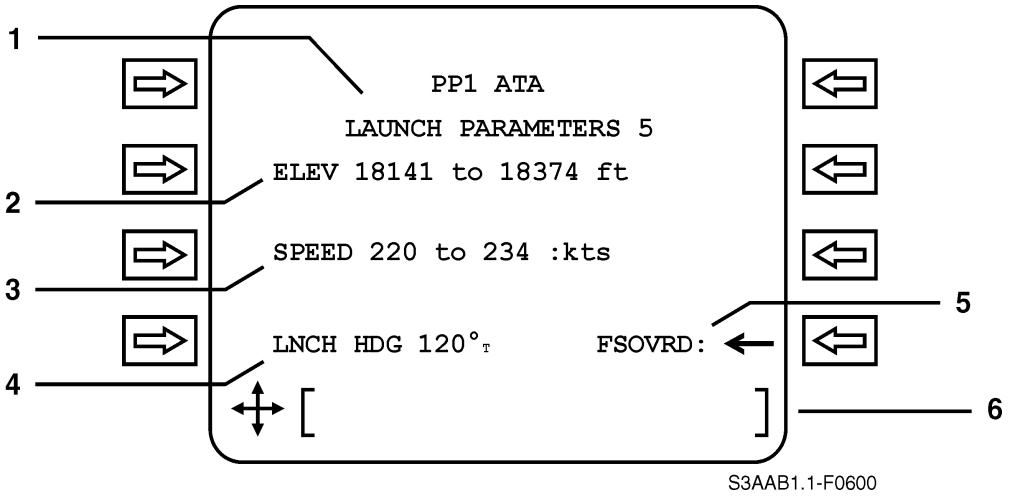

INDEX	CONTROL/INDICATOR	RANGE OF VALUES
1	Page Title	Identifies mission type (PP or TOO — LAND/TOO — ASUW), mission number if PP, page title and wing station.
2	Launch Altitude Range	Minimum and maximum limits. Feet — MSL.
3	Launch Speed Range	Minimum and maximum limits. Knots — TAS or Indicated Mach.
4	Required Aircraft Launch Ground Track	Degrees True.
5	LFK 7	Depressing LFK-7 toggles Launch Speed Range between True Airspeed and Indicated Mach.
5	LFK 8	Failsafe Override Toggle. The Failsafe Override function (FSOVRD) will be displayed and available only if a telemetry MSL is detected. Depressing LFK overrides the failsafe function of telemetry SLAM-ER.
6	Scratchpad	

Figure 3-31. Launch Parameters Page (Sheet 2)

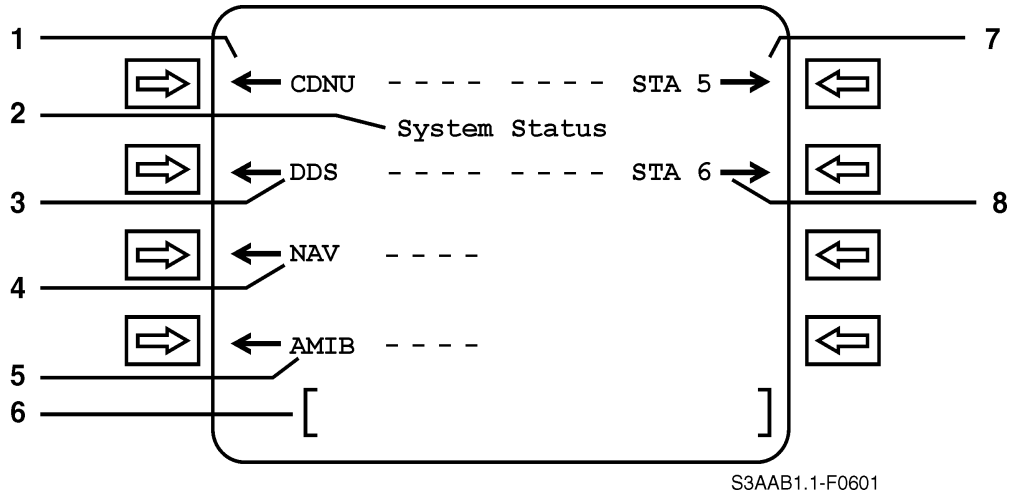

S3AAB1.1-F0601

INDEX	CONTROL/INDICATOR	FUNCTION
1	LFK 1	CDNU — Depressing LFK displays CDNU Status Page. Possible values: ----, GO, NOGO, DEG, TEST.
2	Page Title	
3	LFK 2	DDS — Depressing LFK displays DDS Status Page. Possible values: ----, GO, NOGO, DEG, TEST.
4	LFK 3	NAV — Depressing LFK displays Navigation Interface Status Page. Possible values: ----, GO, NOGO, DEG.
5	LFK 4	AMIB — Depressing LFK displays AMIB Status Page. Possible values: ----, GO, NOGO, DEG, TEST.
6	Scratchpad	
7	LFK 5	STA 5: Depressing LFK displays Status Page of store loaded on wing station 5 if MPS store. Possible values: ----, GO, NOGO, DEG, TEST.
8	LFK 6	STA 6: Depressing LFK displays Status Page of store loaded on wing station 6 if MPS store. Possible values: ----, GO, NOGO, DEG, TEST.

Note

✓STATUS will be displayed on the MPS CDNU for any CBIT noted deficiency, but only three consecutive failures of CBIT for that component will result in an actual failure displayed on the System Status Page. The operator may observe ✓STATUS alert without an associated fault displayed in the System Status Page. It is normal to receive a ✓STATUS alert following selection of SLAM-ER SIM TERM command as the system cycles weapon power.

Figure 3-32. System Status Page

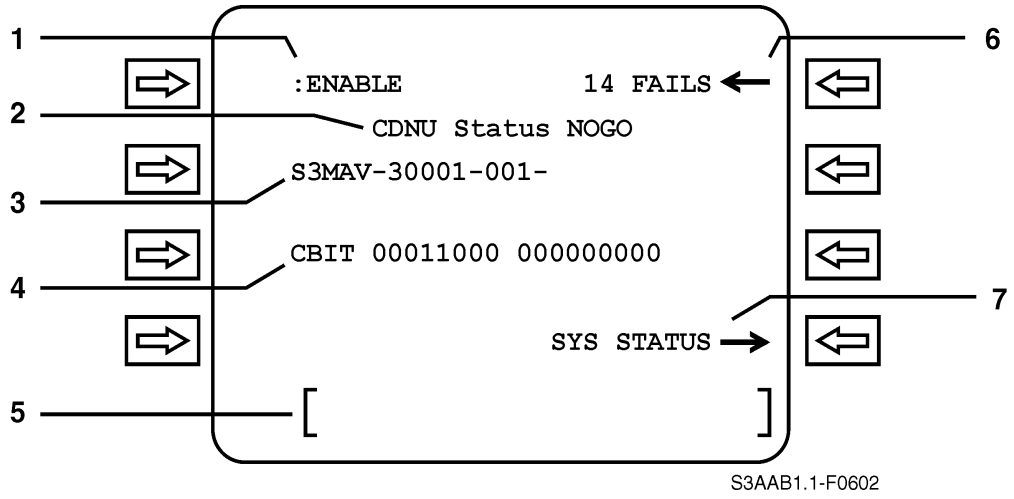

S3AAB1.1-F0602

INDEX	CONTROL/INDICATOR	FUNCTION
1	LFK 1	✓STATUS alert toggle: ENABLE — Continuous BIT (CBIT) failures will be reported to crew on the right side of line 6. DISABLE — CBIT failures will not be reported.
2	Page Title/Status	CDNU/DDS status will be reported as ----/GO/NOGO/DEG/TEST.
3	Software Version Description	Displays version of ACDNU software loaded. Line Blank for DDS.
4	CBIT Failure Indicator	16 Bits available for failure indications. Each bit indicates a separate ACDNU or DDS subsystem or component failure detected by CBIT. Fail = 1 Pass = 0.
5	Scratchpad	
6	LFK 5	Failure Counter — Displays the number of times the status has changed from GO to NOGO since last reset. Depressing LFK resets counter to 0.
7	LFK 8	Depressing LFK returns display to System Status Page.

Figure 3-33. ACDNU/DDS Status Page

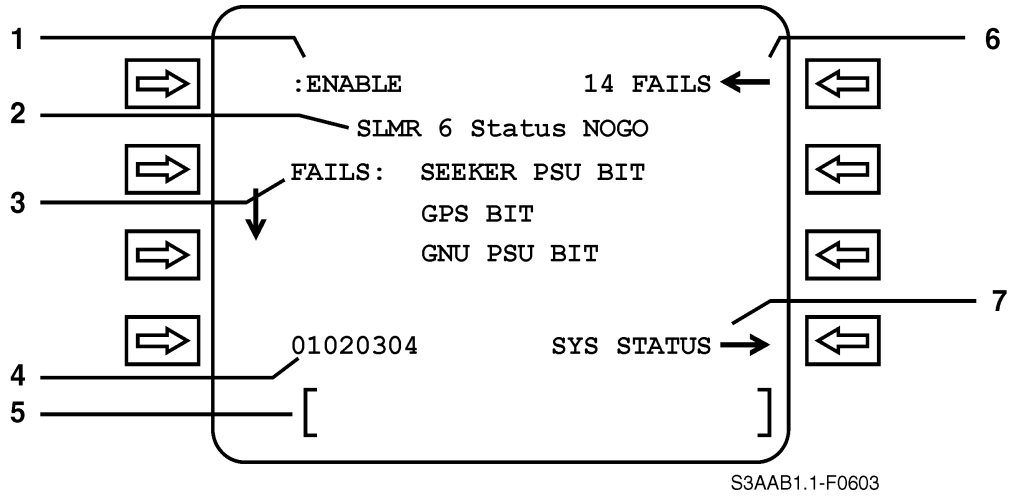

INDEX	CONTROL/INDICATOR	FUNCTION
1	LFK 1	✓STATUS alert toggle: ENABLE — Continuous BIT (CBIT) failures will be reported to crew on the right side of line 6. DISABLE — CBIT failures will not be reported.
2	Page Title/Status	SLMR/AMIB/DL-13 status will be reported as ----/GO/NOGO/DEG/TEST.
3	SLMR CBIT Failures	An arrow indicates that there are more failures to view by scrolling via the UP/DOWN arrows. If no failures, lines will be blank.
4	SLMR software configuration identifier	SLMR only, line otherwise blank: Every two digits of eight-digit word displays the software version for GNU, GPS, Video Symbology, and ATR, respectively.
5	Scratchpad	
6	LFK 5	Failure Counter — Displays the number of times the status has changed from GO to NOGO since last reset. Depressing LFK resets counter to 0.
7	LFK 8	Depressing LFK returns display to System Status Page.

Figure 3-34. SLMR/AMIB/DL-13 Status Page

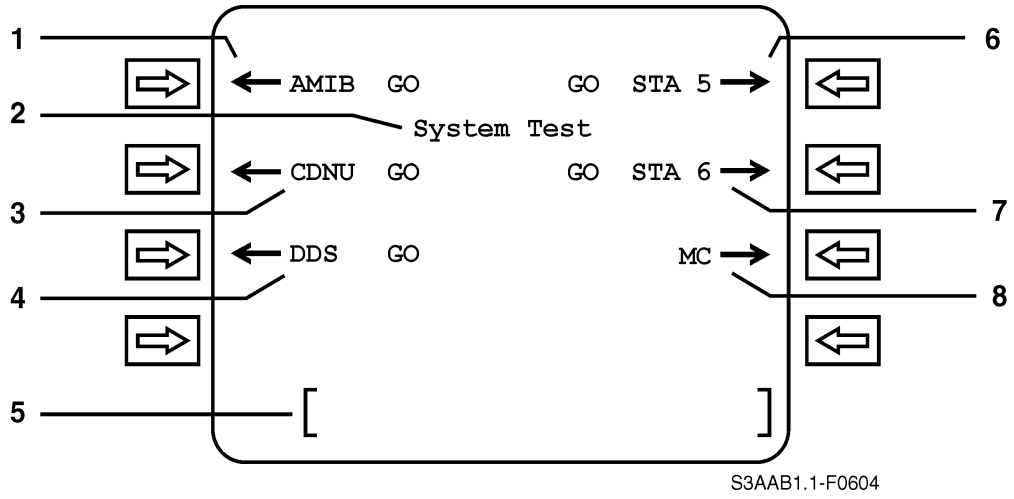

INDEX	CONTROL/INDICATOR	FUNCTION
1	LFK 1	AMIB — Depressing LFK displays AMIB Test Page. IBIT Status is also displayed: GO, NOGO, TEST.
2	Page Title	
3	LFK 2	CDNU — Depressing LFK displays CDNU Test Page. IBIT Status is also displayed: GO, NOGO, TEST.
4	LFK 3	DDS — Depressing LFK displays DDS Test Page. IBIT Status is also displayed: GO, NOGO, TEST.
5	Scratchpad	
6	LFK 5	MPS Store loaded will be displayed (SLMR, IRMAV, LMAV, AWM96). Since LMAV and IRMAV have no IBIT capability, there is no corresponding Test Page and IBIT status is indicated by dashes. Depressing LFK displays Test Page of store loaded on wing station 5. IBIT Status is also displayed: ----, GO, NOGO, TEST.
7	LFK 6	MPS Store loaded will be displayed (SLMR, IRMAV, LMAV, DL-13, AWM96). Since LMAV and IRMAV have no IBIT capability, there is no corresponding Test Page and IBIT status is indicated by dashes. Depressing LFK displays Test Page of store loaded on wing station 6. IBIT Status is also displayed: ----, GO, NOGO, TEST.
8	LFK 7	MC — Depressing LFK displays Missile Controller Test Page.

Figure 3-35. System Test Page

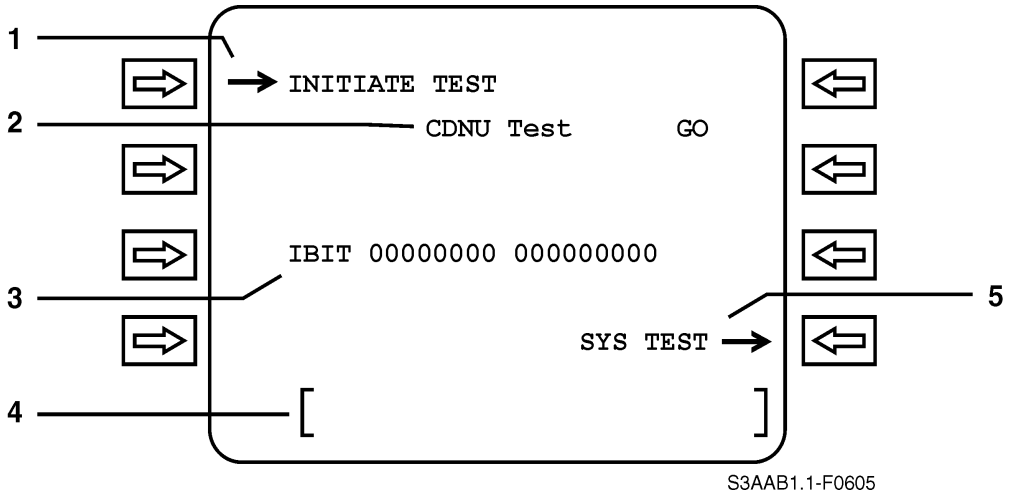

INDEX	CONTROL/INDICATOR	FUNCTION
1	LFK 1	INITIATE TEST: Depressing LFK when inward arrow is present, commences IBIT.
2	Page Title/Status	CDNU/DDS status of last IBIT will be reported as GO/NOGO/ TEST.
3	IBIT Failure Indicator	16 Bits available for failure indications. Each bit indicates a separate ACDNU or DDS subsystem or component failure detected by IBIT. Fail = 1 Pass = 0
4	Scratchpad	
5	LFK 8	Depressing LFK returns display to System Test Page.

Figure 3-36. ACDNU/DDS Test Page

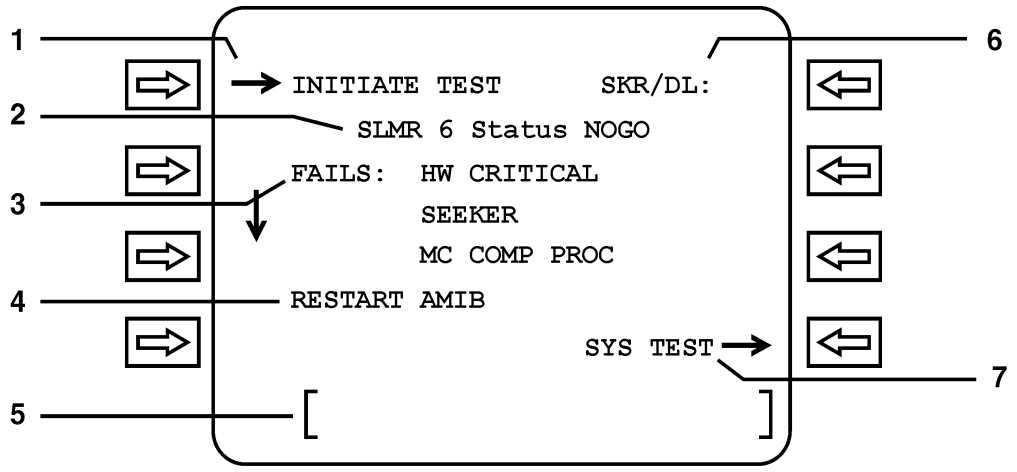

INDEX	CONTROL/INDICATOR	FUNCTION
1	LFK 1	INITIATE TEST: Depressing LFK when inward arrow is present, commences IBIT. **Note** AMIB IBIT initiation requires operator confirmation via keypad.
CAUTION To prevent missile damage, do not taxi during SLMR BIT. Maintain straight and level during SLMR BIT airborne.		
2	Page Title/IBIT Indicator	SLMR/AMIB/DL-13/AWM96: Results of last IBIT is displayed on the right — GO/NOGO/TEST.
3	System IBIT Failures	An arrow indicates that there are more failures to view by scrolling via the UP/DOWN arrows.
4	Restart AMIB Alert	AMIB Test Page Only. The AMIB ceases processing after completion of IBIT. The aircrew must restart the AMIB by cycling power through the AMIB Restart Switch on the MC or cycling the AMIB PWR Circuit Breaker.
Note Selection of an AMIB System Test will require confirmation from the operator and result in the MPS being unusable until AMIB power is reset. AMIB System Test is not recommended if a successful power-up is attained.		
5	Scratchpad	
6	LFK 5	SLMR IBIT Test Only. FULL and SKR/DL Toggle — Enables the crew to select between Full IBIT or Seeker/Datalink IBIT, only. DL-13 IBIT Test Only. FULL and VIDEO Toggle — Enables the crew to select between FULL IBIT or VIDEO IBIT, only.
7	LFK 8	Depressing LFK returns display to System Test Page.

Figure 3-37. SLMR/AMIB/DL-13 Test Page

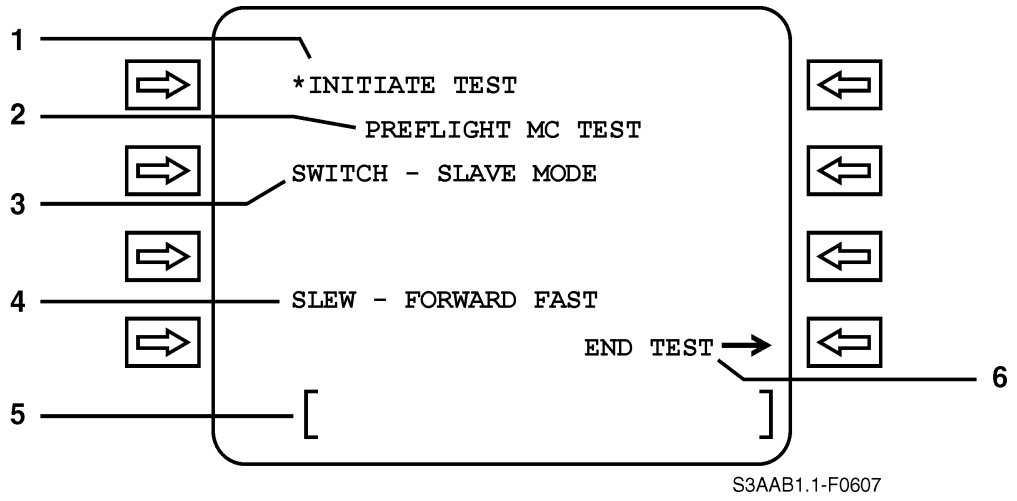

INDEX	CONTROL/INDICATOR	FUNCTION
1	LFK 1	Depressing LFK initiates Mission Controller Preflight Test. After depressing key, an asterisk will replace inward arrow.
2	Page Title	
3	SWITCH function indications	Display of operator actions on Missile Controller SWITCH. As operator invokes each setting, display will change to verify function. Possible values: HAT BACK HAT LEFT HAT RIGHT SLAVE MODE RECESSED DETENT 1 DETENT 2 PINKIE SLEW IN
4	SLEW function indications	Display of operator actions on Missile Controller SLEW. As operator invokes each setting, display will change to verify function. Possible values: CENTERED LEFT LEFT FAST RIGHT RIGHT FAST FORWARD FORWARD FAST BACK BACK FAST
5	Scratchpad	
6	LFK 8	SYS TEST — Displayed when MC Test is not active. Returns display to System Test Page. END TEST — Displayed when MC Test is active. Commands MC out of test mode and returns display to System Test Page.

Figure 3-38. Missile Controller Test Page

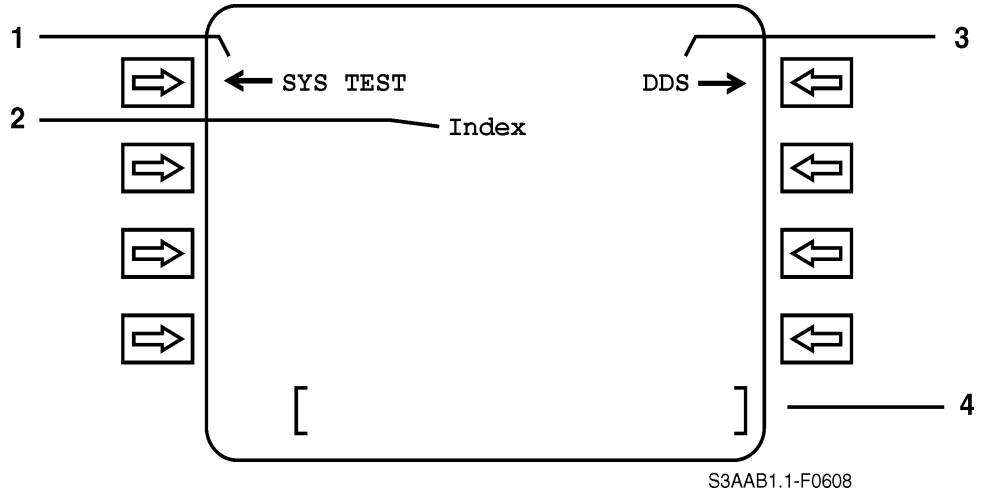

INDEX	CONTROL/INDICATOR	FUNCTION
1	LFK 1	SYS TEST — Depressing LFK displays System Test Page.
2	Page Title	
3	LFK 5	DDS — Depressing LFK displays DDS Page.
4	Scratchpad	

Figure 3-39. Index Page

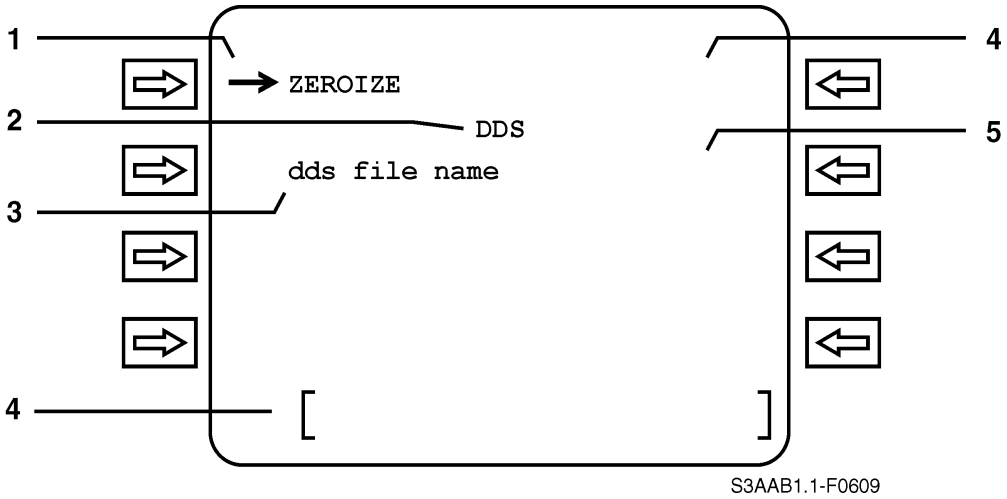

INDEX	CONTROL/INDICATOR	FUNCTION
1	LFK 1	Depressing LFK zeroizes brick inserted into Armament IRU. To zeroize the missile, the operator must go to the Stores Inventory Page.
2	Page Title	
3	DDS File Name Display	Displays file name of brick inserted into IRU.
4	Scratchpad	

Figure 3-40. DDS Page

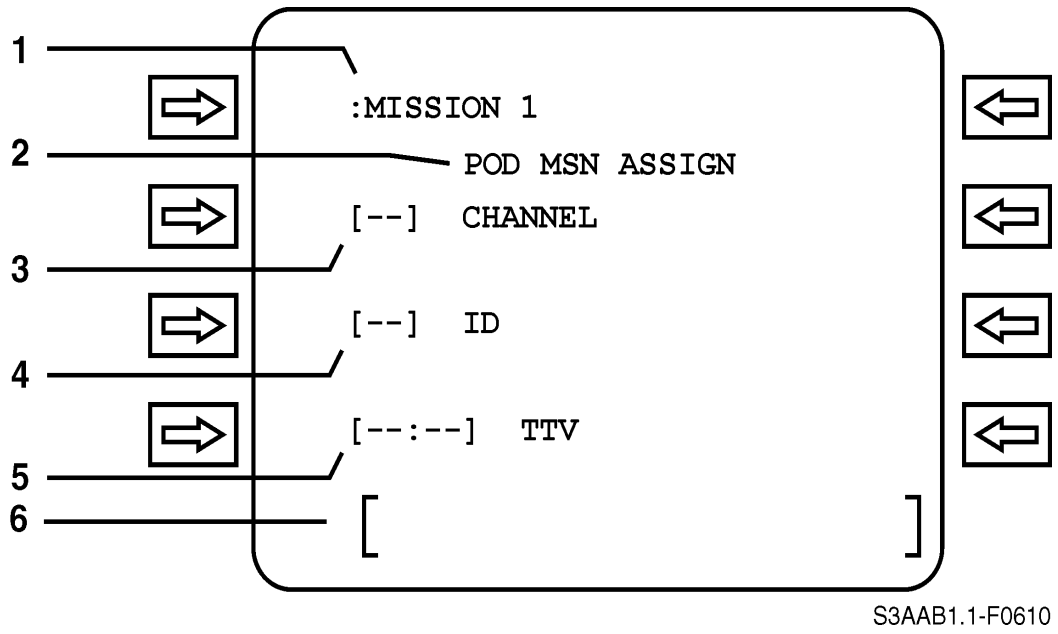

INDEX	CONTROL/INDICATOR	FUNCTION
1	LFK 1	Pod Mission Toggle. Cycles through 4 available Pod Missions. If there is a SLMR on board, Mission 1 data for CH/ID/TTV will come from the brick and is not modifiable. Otherwise, the data is modifiable (indicated by brackets). The operator may enter data for mission 2, 3, or 4. Information is repeated on Pod Pre-launch and Post-launch Pages.
2	Page Title	
3	LFK 2	Missile Channel Number. Modifiable if brackets present.
4	LFK 3	Missile ID Number. Modifiable if brackets present.
5	LFK 4	TTV (Time-to-Video). Modifiable if brackets present.
6	Scratchpad	

Figure 3-41. Pod Mission Assign Page

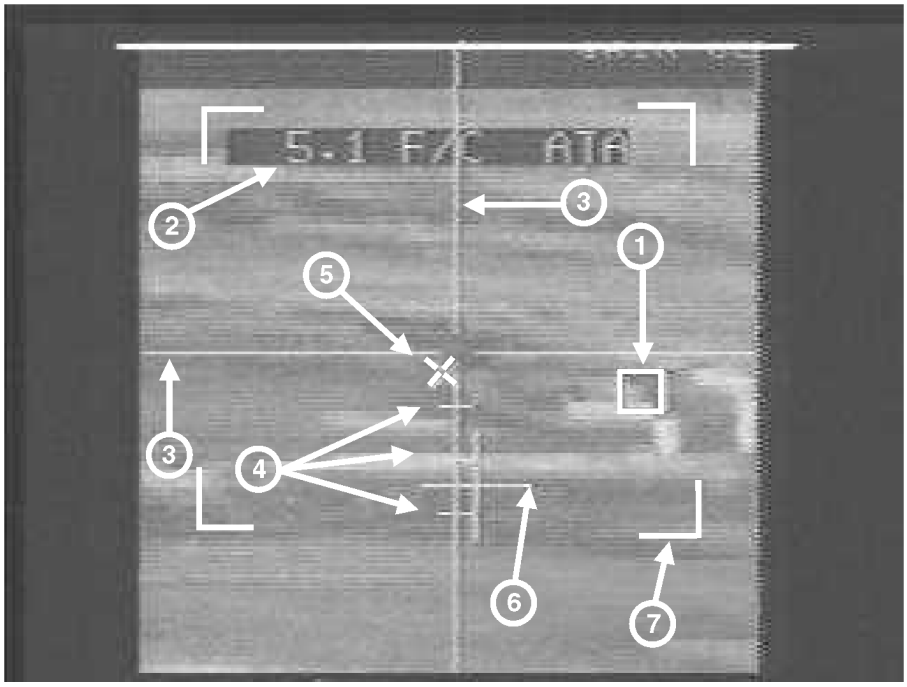

S3AAB1.1-F0611

INDEX	DESCRIPTION
1	Automatic Target Acquisition (ATA) Indicator — A box (displayed) indicates an ATA Low Confidence area. Match ATA has identified a Low Confidence Match area. A diamond indicates an ATA High Confidence Match.
2	In-Video Message Window — Provides range in nmi and various SLAM-ER messages (dependent on software version of missile). SLAM-ER messages inform the operator with the status of the missile, when to perform certain tasks, and whether man-in-the-loop (MITL) control actions have been received and accepted by the missile as valid commands. For a complete list of available messages, refer to appropriate weapons reference manuals.
3	Tracking gate — The crosshairs show the electronic center of the display, and the gap in the center of the crosshairs defines the tracking gate. **Note** All symbols are white when tracking hot-on-cold and are black when tracking cold-on-hot.
4	Depression Markers — 5, 10, 15° depression angle references for pointing cross.
5	Cursor — Using Missile Controller, operator can use cursor to provide aimpoint updates for terminal phase and move the seeker in stabilized slew.
6	Seeker Pointing Cross — The seeker pointing cross indicates where the seeker is “looking” in relation to the missile body.
7	Narrow Field of View (NOFV) markers. When display is in Wide Field of View (WFOV), NFOV markers indicate portion of display that will remain when NFOV is selected.

Figure 3-42. SLAM-ER Display

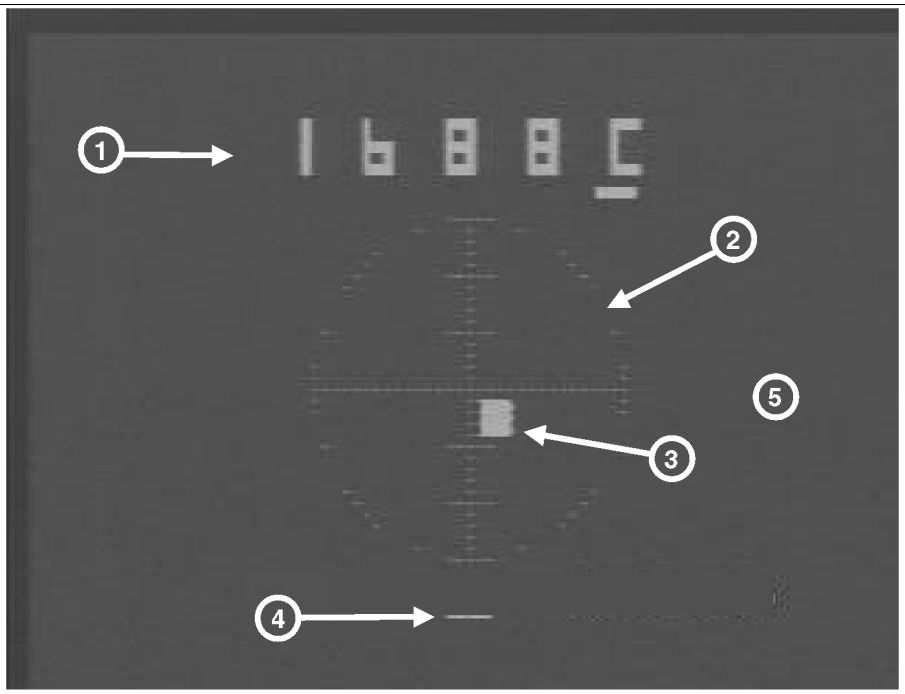

S3AAB1.1-F0612

INDEX	FUNCTION
1	4-digit laser code — The four digits represent the only programmed code that the seeker will acquire and track. When the weapon is first selected, the code will read “1111” (default values).
	WARNING Laser Maverick laser codes entered via the MPS ACDNU shall be confirmed against the Laser Maverick video display. If the two codes do not match, cycling out of the active LMAV page using F1 or other display page and back into the LMAV page should allow proper input of the codes. **Note** A “C” may follow laser codes displayed on the MPS display. This character is used to indicate a countermeasures-enhanced code for other Maverick variants and does not apply to the AGM-65E. The appearance or lack thereof, in no way affects the targeting of the AGM-65E.
2	15-degree Launch Constraint Circle, vertical and horizontal crosshairs, 5 and, 10 degree hash marks. The Launch Constraint Circle is a series of dots arranged in a circle that represents a 15-degree cone about the boresight axis of the missile.
3	Gimbal Position Indicator — Provides crew with an indication of where missile seeker is pointing and missile operating mode. 1. Flashing “X” — Align mode. Indicates that seeker has detected properly coded laser energy. 2. Non-flashing “X” — Slew or Scan mode. Slew mode is entered by pulling the MC trigger to the 2nd detent and holding. Scan mode is entered by momentary trigger actuation to the 2nd detent or when releasing the trigger after operating in the slew mode. 3. Solid square (displayed) — Seeker has detected a sufficient amount of properly coded, reflected laser energy to enable the missile to guide to the target.
4	–20-degree hash mark.
5	(Not pictured) “S” symbol indicating seeker is slaved to the FLIR.

Figure 3-43. Laser Maverick Display

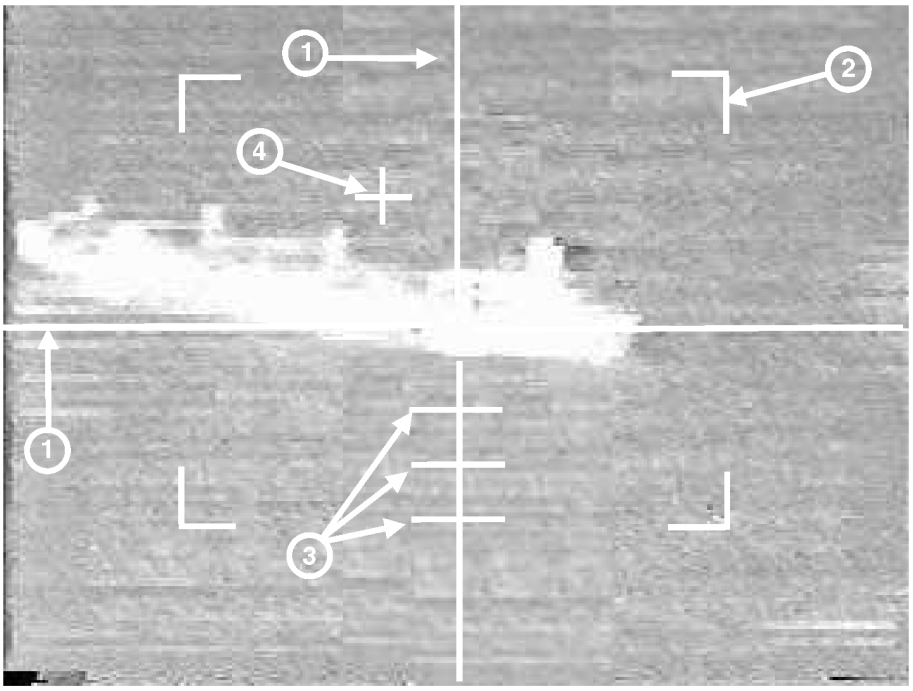

S3AAB1.1-F0613

INDEX	FUNCTION
1	Tracking gate — The crosshairs show the electronic center of the display, and the gap in the center of the crosshairs defines the tracking gate. In LAND Track the gap will be square and in SHIP Track, the gap is rectangular (horizontal dimension twice the vertical dimension, prior to establishing target lock. **Note** All symbols are white when tracking hot-on-cold and are black when tracking cold-on-hot.
2	Narrow-File-of-View (NFOV) Markers — NFOV markers are only present in Wide-Field-of-View. They denote the viewing area which will be displayed in NFOV.
3	Depression Markers — 5, 10, 15° depression angle references for pointing cross.
4	Pointing Cross — Pointing cross provides relative position of missile seeker in relation to missile centerline. When tracking gate is small, that portion of pointing cross extends into the tracking gate is blanked to prevent target obscuration. A flashing pointing cross indicates that this missile has a low probability of surviving launch transients with the track maintained. Flashing may be stopped by gaining more thermal contrast, reducing target range, changing target aspect, or changing field of view.

Figure 3-44. Infrared Maverick Display

Message	Side	Conditions
W5 FAIL	Left	PBIT failure for weapon at station 5
W6 FAIL	Left	PBIT failure for weapon at station 6
SEL W5 MAV	Left	Maverick missile detected at station 5; operator needs to select between IRMAV, LMAV
SEL W6 MAV	Left	Maverick missile detected at station 6; operator needs to select between IRMAV, LMAV
XFER FAIL	Left	Mass data transfer from brick to missile failed
NO MSN DATA	Left	Mission data is not available on the brick
ERASE FAIL	Left	An attempt to zeroize the brick was unsuccessful
SKR LIMIT	Right	Maverick seeker limit exceeded (when slaving)
LAUNCH ABORT	Left	SLAM-ER CATM pickled in regular launch mode
MSL ABORT	Left	SLAM-ER missile abort message received from AMIB prior to CTSS.
HFIRE ABORT	Left	SLAM-ER missile abort message received from AMIB after CTSS.
✓M1 TTV	Left	TTV timer for POD mission #1 has expired
✓M2 TTV	Left	TTV timer for POD mission #2 has expired
✓M3 TTV	Left	TTV timer for POD mission #3 has expired
✓M4 TTV	Left	TTV timer for POD mission #4 has expired
✓STATUS	Right	Hardware or 1553 Comm Failure for any device
W5 LNCH FAIL	Left	AMIB detected Maverick launch failure on STA 5
W5 NO LNCH	Left	AMIB did not detect Maverick launch on STA 5
W5 RELEASE	Left	AMIB detected Maverick launch on STA 5
W5 REL PULSE	Left	AMIB detected Maverick release signal on STA 5
W5 LAUCHED	Left	AMIB detected Maverick successful launch on STA 5
W5 NOISE	Left	AMIB detected stray voltage on interface signals on STA 5
W6 LNCH FAIL	Left	AMIB detected Maverick launch failure on STA 6
W6 NO LNCH	Left	AMIB did not detect Maverick launch on STA 6
W6 RELEASE	Left	AMIB detected Maverick launch on STA 6
W6 REL PULSE	Left	AMIB detected Maverick release signal on STA 6
W6 LAUCHED	Left	AMIB detected Maverick successful launch on STA 6
W6 NOISE	Left	AMIB detected stray voltage on interface signals on STA 6
RESTART AMIB	Left	AMIB IBIT complete

Figure 3-45. ACDNU Global Alerts

SUBPROGRAM	PURPOSE
DATA EXTRACTION	Extracts the weapon inventory with respect to type, quantity, and station. Records the type, time and splash point following release.
STEERING	Provides aircraft maneuvering commands necessary to capture the weapon release point.
BALLISTICS	Determines release point. Computes and displays weapon splash point symbol.
DISPLAY CONTROL	Provides symbol construction and placement of weapon FTP and weapon splash point. Displays cues and alerts used in the armament system.
COMMUNICATIONS	Transmits weapon release information through Link 11.
IN-FLIGHT PERFORMANCE MONITOR (IFPM)	Provides detection, analyzing, and recovery capabilities for GPDC errors. Alerts the operator of malfunctions. Updates the System Status tableau.

Figure 3-46. Armament Control Subprogram Interface

WARNING

Deploying a weapon through ARMCOS with a weapon selected on the ACP may result in inadvertent release of stores.

3.13.1.1.1 Weapon Fly-to-Point. The weapon FTP is an operator entered FTP designating the desired weapon release point when non-forward firing stores have been selected. Weapon FTP becomes available only when the weapon selection is complete. The weapon FTP provides steering commands to the weapon release point. If automatic release mode is being used, the weapon releases when the FTP is captured. Manual mode requires manual release upon FTP capture. In either case, the FTP is removed when capture and release have been accomplished.

Note

When WFTP is placed on CONTIN PRED on track and CONTIN PRED is deselected, the WFTP remains on display. Also, if CONTIN PRED is placed on a different track, the WFTP moves to the CONTIN PRED. Destroy WFTP and reassign it to the desired placement point.

Note

- When deploying conventional free-fall weapons in the manual mode, only steering and ballistics are available when a weapon FTP is displayed.

- Weapon FTP updating, based on target movement is provided in both manual and automatic modes.

Capture of a weapon FTP requires the aircraft track angle to be within 10° of the designated steering track of the FTP. Capture also requires the aircraft establish a CPA of less than 100 yards. Refer to classified supplement for Harpoon FTP description.

All weapon FTPs are designated. The steering subprogram determines the designated track as follows:

1. If multiple mines, practice bombs, or cluster bombs have been selected for release, the operator designates the track in response to a data entry cue.

2. If a track symbol (moving target) has been hooked as the weapon FTP position (in which case the weapon FTP symbol moves with the track

symbol), the moving target's course becomes the designated track.

3. In all other cases, the designated track is the optimal path between the aircraft and FTP.

Only one weapon FTP is allowed in the system at any one time. Additional information on weapon FTP is discussed in Chapter 4 (Steering).

CAUTION

When within 30 seconds of weapon FTP capture, and a RAAWS or BARO ALTITUDE failure occurs, the navigation program will use the last selected or computed altitude until weapon FTP capture occurs or until aircraft is beyond 30 seconds prior to weapon FTP capture.

Note

- Aircraft with AFC-247 installed (AN/APN 194 radar altimeter), send no RAAWS inputs to the GPDC navigation, ballistics, FLIR, RADAR, and data extraction subprograms. Prior to weapon FTP capture, ensure GPDC altitude readout agrees with RAAWS analog readout on pilot/COTAC RAAWS altimeter. Failure to correct the GPDC altitude readout via the barometric setting in INDEX 5 will induce error in the calculated release point. Do not defect the SCADC in system status in order to enter a manual altitude since the ballistics subprogram requires the SCADC to calculate a wind correction.

- Upon selecting multiple weapons other than bombs or mines, i.e., cluster or practice bombs, the operator can designate a WFTP bearing on a track or continuous prediction other than the target's course. Present steering algorithms do not handle this situation well, resulting in numerous failures to capture the WFTP. Do not put WFTPs on moving targets with designated bearing other than the target's course.

3.13.1.1.2 Weapon Inventory. The KILL STORES INVENTORY tableau maintains a weapons inventory in the automatic mode only. When switching from manual to automatic mode, the inventory will update if ARM/ORD is reinitialized. Upon reinitialization, defects will be indicated at those stations where weapons were expended in the manual mode.

The initial inventory is determined by what has been entered into the ACP. The KILL STORES INVENTORY tableau is updated after every release. The ACP must be adjusted and then an ARM/ORD reinitialization done to modify the weapon type. Only the MOD number of Mk 46 Mod 2 and Mod 5 torpedoes is modifiable via select line. The QUANTITY column of the KILL STORES tableau is operator modifiable via select line. Lines 8 and 9 are operator modifiable to indicate MK 83 or MK 84 when MK 82 bombs (B82) are selected. After an ARM/ORD reinitialization, the quantity columns for the wings will read 3 if TER is dialed into the ACP wing station windows, regardless of the actual number of weapons on the TERs. The quantity can then be modified, if necessary, to indicate the proper TER load. Line 11 shall indicate the target elevation in feet and is operator modifiable.

Note

- The entered target elevation is not used if RAAWS is the primary altitude source.

- Entered target elevation is subtracted from the system altitude (NAV Parameters Tableau) for calculation of WFTP placement.

- Target elevation is NOT cleared after weapon release nor is it affected by an ARM/ORD reinit.

- The kill stores inventory must be changed to reflect the actual aircraft load. Failure to do this may result in a firing pulse being sent to unloaded stations, resulting in unexpended ordnance or improper weapon placement.

3.13.1.1.3 Error Analysis. The armament control system performs accuracy error checks before sending a release command. When an error is detected, an attempt is made to transmit the release command correctly two more times. After three unsuccessful attempts, the crew is informed with the following message:

ZZZZ ARM CONT DEF

(ZZZZ = Time of failure)

A manual mode release may be attempted at this time.

If the release command is transmitted, but the weapon does not release within 1 second, the crew is informed by the following alert:

ZZZZ NO DROP STA X

(ZZZZ = Time of failure,
X = Weapon station number)

Alternate release methods can be attempted.

If the KILL STORES INVENTORY tableau differs from the station status (tableau shows a weapon loaded; rack status indicates no weapon or vice versa), a D is placed in the defects column of the KILL STORES INVENTORY tableau for the station in question. The D indicates the station is defective and cannot be utilized. If the flight station ACP AUTO/MAN switch is in MAN, an E will appear in the defect column of the KILL STORES INVENTORY tableau at all weapons stations.

Note

When a TER or PBR is dialed into the WPN W5, W6 selection, a difference between the tableau and weapon station status will not cause a D to appear in the tableau column for that station in question.

3.14 KILL STORES CONTROL FUNCTIONS

Pressing the KILL STORES matrix select switch on the INCOS tray (see FO-9) lights the KILL STORES legend amber, and displays the following KILL STORES options at the initiating operator's station (COTAC, TACCO, or SENSO):

3.14.1 TORP (Torpedo). Selects mode, ceiling, and initial search depth for release of torpedoes.

3.14.2 BOMB. Selects type, quantity, spacing, and arming for release of bombs.

3.14.3 MINE. Selects type, quantity, and spacing for release of mines.

3.14.4 PRACT BOMB (Practice Bomb). Selects type, quantity, and spacing for release of practice bombs.

3.14.5 CLSTR BOMB (Cluster Bomb). Selects arming, quantity, and spacing for release of cluster bombs.

3.14.6 HRPN MSL SIM (Harpoon Missile Simulator). Provides for selection of the simulation operator and conditions that occur during a training exercise.

3.14.7 WPN FTP (Weapon Fly-to-Point). Displays a WPN FTP at a calculated release position when a track, continuous predict, or intended splash point is hooked. Provides aircraft steering to release envelope for Harpoon, and is used for steering the aircraft to the designated position in the manual mode. In the automatic mode, arrival at the FTP also releases the selected weapon(s) except Harpoon missiles.

3.14.8 MSL (Missile). Selects a missile for release.

3.14.9 SUS (Sound Underwater Signal). Selects a SUS for release.

3.14.10 RLSE (Release). Releases selected KILL STORE in the automatic mode.

3.14.10.1 TGT AIDS (Target Aids). Allows crew to insert DTOT and/or wind for Harpoon missile.

3.14.11 KILL STORES Matrix

TACCO
SENSO
COTAC

KILL STORES

PURPOSE:

Displays option select function legends associated with the selection, preparation and release of kill stores.

PREREQUISITE:

None.

PROCEDURE:

1. Press KILL STORES (lights amber).

Note

- KILL STORES legend on COTAC INCOS is KIL STR.
- KIL STR at the COTAC station does not light amber when pressed. The legend goes black and the matrix C RETAIN SYMBOL legend appears.

a. KILL STORES option select function legends are displayed in the matrix B option select switches.

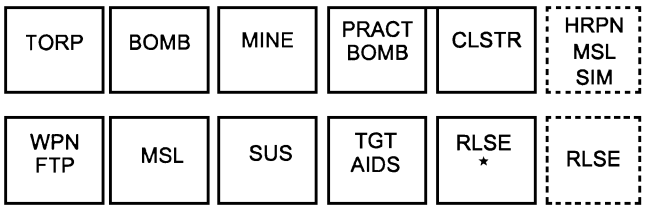

Note

*Blank for COTAC switches.

DEACTIVATION:

1. KILL STORES matrix B is deactivated when another matrix select switch is pressed.
2. Deactivation results:

a. KILL STORES option select function legends are replaced by option select function legends associated with another matrix select.

b. KILL STORES changes from amber to green.

3.14.11.1 TORP Option

TACCO
SENSO
COTAC

KILL STORES

PURPOSE:

Selects and prepares a torpedo for release.

PREREQUISITES:

1. KILL STORES/KIL STR matrix is active.
2. AUTO/MAN switch on the ACP is in the AUTO position.
3. Weapon selection functions are inactive at all stations.
4. ARM/ORD initialization is not in progress.
5. A torpedo is available.

PROCEDURE:

1. Press TORP (lights amber).

a. Other weapon selections at all stations change to black.

b. The following cue appears:

SEL TYPE
1 MK46-2
2 MK46-5
3 MK50

Note

- MK-50 Block (0) torpedo is supported by FI B4.4.4.
- MK-46-5 (AS) Torpedo is supported by FI B4.4.4. The (ASW) variant is not supported.

2. Respond to the SEL TYPE cue.

a. Press a number on the keyset to select the desired torpedo type.

b. Press ENTER.

c. If decision cue 1 was selected, proceed step 3.

d. If decision cue 2 was selected, proceed to step 7.

e. If decision cue 3 was selected, proceed to step 12.

3. The following cue is displayed:

```
SEL MODE-CEILING
1 PSV 20
2 PSV 50
3 ACT 20
4 ACT 50
```

4. Respond to the MODE-CEILING cue.

   a. Press a number on the keyset to select the desired mode and ceiling.

   b. Press ENTER.

5. The following cue is displayed:

```
SEL ISD-FT MK46-2
1  125D   4  500
2  275D   5  750
3  275    6  1000
```

Note

- The program automatically selects both nose and tail arming whenever TORP is selected.

- D = Doppler.

6. Respond to the SEL ISD-FT MK 46-2 cue.

   a. Press a number on the keyset to select the desired initial search depth. Proceed to step 15.

7. The following cue is displayed:

```
SEL MODE-CEILING
1 PSV  20
2 PSV  50
3 ACT  20
4 ACT  50
```

8. Respond to the MODE-CEILING cue.

   a. Press a number on the keyset to select the desired mode and ceiling.

   b. Press ENTER.

9. The following cue is displayed:

```
SEL ISD-FT MK 46-5
1  125D   4  500
2  275D   5  850
3  275    6  1400
```

Note

- The program automatically selects both nose and tail arming whenever TORP is selected.

- D = Doppler

10. Respond to the SEL ISD-FT MK46-5 cue

    a. Press a number on the keyset to select the desired initial search depth. Proceed to step 15.

11. The following cue is displayed:

```
SEL MODE-CEILING
1 ST20
2 60D
3 20
4 60
```

12. Respond to the MODE-CEILING cue.

    a. Press a number on the keyset to select the desired mode and ceiling.

    b. Press ENTER.

13. The following cue is displayed:

```
SEL ISD-FT MK50
1 60
2 125
3 375
4 375D
5 850
6 1600
```

Note

- The program automatically selects both nose and tail arming whenever TORP is selected.

- D = Doppler

14. Respond to the SEL ISD-FT MK50 cue.

    a. Press a number on the keyset to select the desired initial search depth.

15. Press ENTER.

    a. WPN FTP lights green.

    b. If the following alerts appear:

       (1) On the activating operator's MPD:

           MSTR ARM OFF

       (2) On the pilot display:

           TURN ON MSTR ARM

       (3) MSTR ARM cue light is lighted at the pilot station.

       (4) MASTER ARM switch to ON.

           (a) Alerts (1), (2), and (3) are erased.

           (b) The following alert appears on the pilot display and activating operator's MPD:

               CHECK WPN SPD/ALT

    c. If the following alerts appear:

       (1) On the activating operator's MPD:

           BOMB DOORS CLOSED

       (2) On the pilot display:

           OPEN BOMB DOORS

       (3) Pilot is instructed to open the bomb bay doors.

       (4) Pilot responds by pressing the DOORS switch on the ACP at the pilot station.

           (a) After the bomb bay doors have opened, the alerts in (1) and (2) are erased from the displays.

    d. If no other alert is displayed:

       (1) RLSE lights amber at the activating operator station.

       (2) Torpedo is ready for release.

Note

After selection of master arm to "Arm," a 6-second delay will occur prior to the torpedo being ready for release. This delay is to allow the BB rack to relock in the event of a preset failure.

DEACTIVATION:

1. TORP is deactivated when one of the following occurs:

   a. Release of a torpedo.

   b. TORP is pressed when amber.

   c. AUTO/MAN switch on ACP is switched to MAN position.

   d. Another function is activated requiring the use of the cueing area.

   e. Activation of the ARM/ORD reinitialization function.

2. Deactivation results:

   a. WPN FTP changes from green to black.

   b. RLSE switch changes from amber to black.

   c. All weapon selection function switches change to green if a weapon is available.

   d. The alert TURN OFF MSTR ARM is displayed if the MASTER ARM switch is ON and the MSTR ARM cue light comes on.

   e. Deselection of any selected torpedo.

   f. Removal of all cues and alerts.

   g. The alert CLOSE BOMB DOORS is displayed at the pilot station (if applicable).

3.14.11.1.1 BOMB Option

TACCO
SENSO
COTAC

BOMB

KILL STORES

PURPOSE:

Selects and prepares bombs for release.

PREREQUISITES:

1. KILL STORES/KIL STR matrix is active.
2. AUTO/MAN switch on the ACP is in the AUTO position.

Note

Selection of R82 will not be available for the bomb bay. To deploy R82, option B82 must be selected. This will result in incorrect ballistics.

3. Weapon selection functions are inactive at all stations.
4. ARM/ORD initialization is not in progress.
5. Bombs are available.

PROCEDURE:

1. Press BOMB (lights amber).
   a. Other weapon selections at all stations change to black.
   b. If no alert appears, the following cue appears:

```
SEL TYPE
1  B82
2  R82
3  B83
4  B84
```

2. Respond to the SEL TYPE cue.
   a. Press a number on the keyset to select the desired bomb type.
3. Press ENTER.
   a. If no alert appears, the following cue appears:

```
ENT QTY XX AVAIL
--
```

Note

XX represents the number available.

4. Respond to the ENT QTY XX AVAIL cue.
5. Press ENTER.
   a. The following cue appears:

```
SEL  ARMING
1  NOSE
2  TAIL
3  BOTH
```

6. Respond to the SEL ARMING cue.
   a. Press a number on the keyset to select the type of arming desired.
7. Press ENTER.
   a. The following cue appears:

```
ENT SPACING YDS
----
```

Note

Entry range is 25 to 70 yards. The weapon release system is limited by a minimum release interval of 0.10 seconds from the wing stations and, except for Mk 76 practice bombs, 0.38 seconds from the bomb bays. The minimum spacing is directly related to aircraft groundspeed at the time of the release. For example, 50 yard spacing is not possible at groundspeeds above 234 knots and 25 yard spacing from the bomb bays is not possible at any realistic airspeed.

8. Respond to the ENT SPACING YDS cue.
   a. Press numbers on the keyset to select the desired spacing.
9. Press ENTER.
   a. If the following alerts appear:
      (1) On the activating operator's MPD:

```
MSTR ARM OFF
```

(2) On the pilot display:

TURN ON MSTR ARM

(3) MSTR ARM cue light is lighted at the pilot station.

(4) Pilot responds by switching the MASTER ARM switch to ON.

(a) Alerts in step 9a are erased and the MSTR ARM cue light goes out.

b. The following alert appears on the pilot display and activating operator's MPD:

CHECK WPN SPD/ALT

c. If decision 2 (R82) was selected in response to the SEL TYPE cue, the following alert appears:

RETARDED WPN

(1) Informs the pilot and operator that a retarded weapon has been selected.

d. If the following alerts appear:

(1) On the activating operator's MPD:

BOMB DOORS CLOSED

(2) On the pilot display:

OPEN BOMB DOORS

(3) Pilot presses the DOORS switch on the ACP at the pilot station.

(a) After the bomb bay doors have opened, the alerts in (1) and (2) are erased from the displays.

e. If no other alert is displayed:

(1) RLSE lights amber at the activating operator station.

(2) Bomb(s) are ready to release.

DEACTIVATION:

1. BOMB is deactivated when one of the following occurs:

a. Attempted release of the last selected bomb.

b. AUTO/MAN switch on the ACP is changed from AUTO to MAN.

c. BOMB is pressed when amber.

d. Activation of another function requiring the use of the cueing area.

e. Activation of the ARM/ORD initialization function.

2. Deactivation results:

a. WPN FTP changes from green to black.

b. RLSE changes from amber to black.

c. All weapon selection switches change to green at all stations if a weapon is available.

d. The weapon FTP is removed from the system if the function has not come to a normal completion.

e. The alert TURN OFF MSTR ARM is displayed if the MASTER ARM switch is ON and the MSTR ARM cue light comes on.

f. Selected bomb(s) is deselected.

g. Cues initiated by ARM CON are removed.

h. Removal of the alerts CHECK WPN SPD/ALT and RETARDED WPN are removed (if applicable).

i. The alert CLOSE BOMB DOORS is displayed at the pilot station (if applicable).

3.14.11.1.2 MINE Option

TACCO
SENSO
COTAC

KILL STORES

PURPOSE:

Selects and prepares mine(s) for release.

PREREQUISITES:

1. KILL STORES/KIL STR matrix is active.
2. AUTO/MAN switch on the ACP is in the AUTO position.

3. Weapon selection functions are inactive at all stations.

4. ARM/ORD initialization is not in progress.

5. Mines are available.

PROCEDURE:

1. Press MINE (lights amber).

   a. Other weapon selections at all stations become unavailable.

   b. If no alert appears, the following cue appears:

```
SEL TYPE
1 D36
2 R36
3 M52
4 M55
5 M56
6 M60
```

2. Respond to the SEL TYPE cue.

   a. Press a number on the keyset to select the desired mine.

3. Press ENTER.

   a. If no alert appears, the following cue appears:

```
ENT QTY XX AVAIL
--
```

Note

XX represents the quantity available.

4. Respond to the ENT QTY XX AVAIL cue.

   a. Press numbers on the keyset to enter the quantity desired.

Note

The program automatically selects both nose and tail arming whenever MINE is selected.

5. Press ENTER.

   a. If only one drop is requested, proceed to step 7a.

   b. If no alert appears and more than one drop is requested, the following cue appears:

```
ENT SPACING YDS
----
```

Note

Entry range is 50 to 9,999 yards.

6. Respond to the ENT SPACING YDS cue.

   a. Press numbers on the keyset to enter the desired spacing.

7. Press ENTER.

   a. If the following alerts appear:

      (1) On the activating operator's MPD:

```
MSTR ARM OFF
```

      (2) On the pilot display:

```
TURN ON MSTR ARM
```

      (3) MSTR ARM cue light is lighted at the pilot station.

      (4) Pilot responds by switching MASTER ARM switch to ON.

         (a) Alerts in (1), (2), and (3) are erased.

   b. If decision 1 (D36) was selected in step 2, the following alert appears on the pilot display and the activating operator's MPD:

```
CHECK WPN SPD/ALT
```

   c. If decision 2 (R36) was selected in step 2, the following alert appears on the pilot display and the activating operator's MPD:

```
RETARDED WPN
```

      (1) Informs the pilot and the operator that a retarded weapon has been selected.

   d. If the following alerts appear:

      (1) On the activating operator's MPD:

```
BOMB DOORS CLOSED
```

(2) On the pilot display:

OPEN BOMB DOORS

(3) Pilot is instructed to open the bomb bay doors.

(4) Pilot presses the DOORS switch on the ACP at the pilot station.

(a) After the bomb bay doors have opened, the alerts in (1) and (2) are erased from the displays.

e. If no other alert appears:

(1) RLSE lights amber at the activating operator station.

(2) Mine(s) is (are) ready for release.

DEACTIVATION:

1. MINE is deactivated when one of the following occurs:

a. Attempted release of the last selected mine.

b. MINE is pressed when amber.

c. AUTO/MAN switch on the ACP is changed to the MAN position.

d. Activation of the ARM/ORD initialization function.

e. Another function is activated requiring the use of the cueing area.

2. Deactivation results:

a. WPN FTP changes from green to black.

b. RLSE changes from amber to black.

c. All weapon selection function switches change to green if a weapon is available.

d. Selected mines are deselected.

e. The alert TURN OFF MASTER ARM is displayed if the MASTER ARM switch is ON and the MSTR ARM cue lights.

f. Displayed cues are removed.

g. The CHECK WPN SPD/ALT and the RETARDED WPN alerts are removed (if applicable).

h. The alert CLOSE BOMB DOORS is displayed at the pilot station (if applicable).

3.14.11.1.3 PRACT BOMB Option

TACCO
SENSO
COTAC

KILL STORES

PURPOSE:

Selects and prepares practice bombs for release.

PREREQUISITES:

1. KILL STORES/KIL STR matrix is active.
2. AUTO/MAN switch on the ACP is in the AUTO position.
3. Weapon selection functions are inactive at all stations.
4. ARM/ORD initialization is not in progress.
5. Practice bombs are available.

PROCEDURE:

1. Press PRACT BOMB (lights amber).

a. Other weapon selections at all stations become black.

b. The following cue appears:

SEL TYPE
1 PBR 76
2 PBR 106

2. Respond to the SEL TYPE cue.

a. Press a number on the keyset to select the desired practice bomb.

3. Press ENTER.

   a. If no alert appears, the following cue appears:

   ENT QTY XX AVAIL
   --

Note

XX represents the quantity.

4. Respond to the ENT QTY XX AVAIL cue.

   a. Press numbers on the keyset to select the quantity.

5. Press ENTER.

   a. If no alert appears, the following cue appears:

   SEL ARMING
   1 NOSE
   2 TAIL
   3 BOTH

6. Respond to the SEL ARMING cue.

   a. Press a number on the keyset to select the type of arming desired.

7. Press ENTER.

   a. If only one drop is requested, proceed to step 9a.

   b. If no alert appears and more than one drop is requested, the following cue appears:

   ENT SPACING YDS

Note

Entry range is 50 to 9,999 yards. The weapon release system is limited by a minimum release interval of 0.10 seconds from the wing stations and, except for Mk 76 practice bombs, 0.38 seconds from the bomb bays. The minimum spacing is directly related to aircraft groundspeed at the time of the release. For example, 50 yard spacing is not possible at groundspeeds above 234 knots and 25 yard spacing from the bomb bays is not possible at any realistic airspeed.

8. Respond to the ENT SPACING YDS cue.

   a. Press numbers on the keyset to enter the desired spacing.

9. Press ENTER.

   a. If the following alerts appear:

      (1) On the activating operator's MPD:

      MSTR ARM OFF

      (2) On the pilot display:

      TURN ON MSTR ARM

      (3) MSTR ARM cue light is lighted at the pilot station.

      (4) Pilot responds by switching the MASTER ARM switch to ON.

         (a) Alerts in (1), (2), and (3) are erased.

   b. The following alert appears on the pilot display and activating operator's MPD:

   CHECK WPN SPD/ALT

   c. If the following alerts appear:

On the activating operator's MPD:

BOMB DOORS CLOSED

   (1) On the pilot display:

   OPEN BOMB DOORS

   (2) Pilot presses the DOORS switch on the ACP.

      (a) After the bomb bay doors have opened, the alerts in (1) and (2) are erased.

   d. If no other alert appears:

      (1) RLSE lights amber at the activating operator station.

      (2) Practice bomb(s) is/are ready for release.

DEACTIVATION:

1. PRACT BOMB is deactivated when one of the following occurs:

   a. Attempted release of the last selected practice bomb.

b. AUTO/MAN switch on the ACP is switched to the MAN position.

c. PRACT BOMB is pressed when amber.

d. Another function is activated requiring the use of the cueing area.

e. Activation of the ARM/ORD reinitialization function.

2. Deactivation results:

a. WPN FTP changes from green to black.

b. RLSE switch changes from amber to black.

c. All weapon selection function switches change to green if a weapon is available.

d. The alert TURN OFF MSTR ARM is displayed if the MASTER ARM switch is ON and the MSTR ARM cue lights.

e. Selected practice bombs are deselected.

f. Removal of all cues and alerts.

g. The alert CLOSE BOMB DOORS is displayed at the pilot station (if applicable).

3.14.11.1.4 CLSTR BOMB Option

TACCO
SENSO
COTAC

KILL STORES

PURPOSE:

Selects and prepares cluster bombs for release.

PREREQUISITES:

1. KILL STORES/KIL STR matrix is active.

2. AUTO/MAN switch on the ACP is in the AUTO position.

3. Weapon selection functions are inactive at all stations.

4. ARM/ORD initialization is not in progress.

5. Cluster bombs are available.

PROCEDURE:

1. Press CLSTR BOMB (lights amber).

Note

Other weapon selection switches at all stations become black.

a. The following cue appears:

SEL TYPE
1 C20-2
2 C20-3

2. Respond to the SEL TYPE cue.

a. If decision 1 is selected, proceed to step 5.

b. If decision 2 is selected, proceed to step 3.

3. Press ENTER.

a. The following cue appears:

SEL ARMING
1 NOSE
2 TAIL
3 BOTH

4. Respond to the SEL ARMING cue.

Note

Only options 2 (TAIL) or 3 (BOTH) are available for response to the SEL ARMING cue.

a. If option 2 is selected, the cluster bomb drops with a short (1.2 seconds) dispersion delay.

b. If option 3 is selected, the cluster bomb drops with a long (4.0 seconds) dispersion delay.

c. If option 1 is selected, the following alert appears:

SELECTION UNAVAIL

(1) Operator must respond to the cue by pressing numbers 2 or 3 on the keyset.

5. Press ENTER.

   a. If no alert appears, the following cue appears:

      ENT QTY XX AVAIL
      --

Note

XX represents the quantity available.

6. Respond to the ENT QTY XX AVAIL cue.

   a. Press numbers on the keyset to select the quantity.

7. Press ENTER.

   a. If only one drop is requested, proceed to step 9a.

   b. If no alert appears and more than one drop is requested, the following cue appears:

      ENT SPACING YDS

Note

Entry range is 25 to 70 yards. The weapon release system is limited by a minimum release interval of 0.10 seconds from the wing stations and, except for Mk 76 practice bombs, 0.38 seconds from the bomb bays. The minimum spacing is directly related to aircraft groundspeed at the time of the release. For example, 50 yard spacing is not possible at groundspeeds above 234 knots and 25 yard spacing from the bomb bays is not possible at any realistic airspeed.

8. Respond to the ENT SPACING YDS cue.

   a. Press numbers on the keyset to enter the desired spacing.

9. Press ENTER.

   a. If the following alerts appear:

      (1) On the activating operator's MPD:

          MSTR ARM OFF

      (2) On the pilot display:

          TURN ON MSTR ARM

      (3) MSTR ARM cue light is lighted at the pilot station.

      (4) Pilot responds by switching the MASTER ARM switch to ON.

          (a) Alerts (1), (2), and (3) are erased.

          (b) The following alert appears on the pilot display and the activating operator's MPD:

              CHECK WPN SPD/ALT

   b. If no other alert appears:

      (1) RLSE lights amber at the activating operator's station.

      (2) Cluster bombs are ready for release.

DEACTIVATION:

1. CLSTR BOMB is deactivated when one of the following occurs:

   a. Attempted release of the last selected cluster bomb.

   b. AUTO/MAN switch on the ACP is switched to the MAN position.

   c. CLSTR BOMB is pressed when amber.

   d. Another function is activated requiring the use of the cueing area.

   e. Activation of the ARM/ORD reinitialization function.

2. Deactivation results:

   a. WPN FTP changes from green to black.

   b. RLSE switch changes from amber to black.

   c. All weapon selection function switches change to green if a weapon is available.

   d. The alert TURN OFF MASTER ARM is displayed if the MASTER ARM switch is on and the MSTR ARM cue lights.

e. All cues and alerts are removed.

f. Selected cluster bombs are deselected.

3.14.11.1.5 WPN FTP Option

TACCO
SENSO
COTAC

WPN FTP

KILL STORES

PURPOSE:

Displays a weapon FTP on the MPD.

PREREQUISITES:

1. A track, continuous predict, intended splash point position, or release envelope for Harpoon is hooked on the MPD.
2. A KILL STORE is selected for release.

PROCEDURE:

1. Press WPN FTP (momentary).

   a. If the WPN FTP function is activated in the AUTO mode, and multiple mines or practice bombs have been selected for release.

      (1) Proceed to step 2.

   b. If a torpedo was selected for release and a fix or geo-position was hooked.

      (1) Proceed to step 5.

   c. If a torpedo was selected for release and a track or continuous predict was hooked.

      (1) Proceed to step 11.

   d. If a single weapon other than a torpedo is selected for release and an intended splash point position was hooked (AUTO or MAN mode):

      (1) The weapon FTP is displayed at the computed release point. The designated heading will appear between the A/C and the hooked position:

      (2) RLSE switch lights amber

Note

In AUTO mode, the weapon is released when the FTP is captured.

   e. If a single weapon other than a torpedo is selected for release and a track or continuous predict was hooked (AUTO or MAN mode):

      (1) The weapon FTP is displayed at the computed release point. The designated heading is the same as that of the hooked track or continuous predict.

      (2) RLSE switch lights amber.

Note

In AUTO mode, the weapon is released when the FTP is captured.

2. The following cue appears:

   ENT BEARING-DEG
   ---

3. Respond to the ENT BEARING-DEG cue.

   a. Press number on the keyset to enter the desired bearing.

4. Press ENTER

   a. The weapon FTP is displayed at the computed release point.

   b. RLSE switch lights amber

5. The following cue appears:

   ENT BEARING-DEG
   ---

6. Respond to the ENT BEARING-DEG cue.

   a. Press numbers on the keyset to enter the desired bearing.

7. Press ENTER

   a. The following cue appears:

   ENT OFFSET-YDS
   ----

8. Respond to the ENT OFFSET-YDS cue.

   a. Press numbers on the keyset to enter the desired distance that the torpedo will lead the target.

9. Press ENTER

   a. The following cue is displayed to allow the operator to verify the entered offset distance.

      VERIFY OFFSET
      XXXXYDS
      1 YES
      2 NO

Note

XXXX represents the previously entered lead distance.

10. Respond to the VERIFY OFFSET cue.

    a. If decision 1 is selected:

       (1) The weapon FTP is displayed at the computed release point such that the weapon water entry will occur on the entered bearing at the entered distance ahead of the hooked track.

       (2) RLSE switch lights amber.

    b. If decision 2 is selected, the ENT OFFSET-YDS cue is redisplayed.

11. The following cue appears:

    ENT OFFSET-YDS
    ----

12. Respond to the ENT OFFSET-YDS cue.

    a. Press numbers on the keyset to enter the desired distance that the torpedo will lead the target.

13. Press ENTER.

    a. The following cue appears:

       VERIFY OFFSET
       XXXX YDS
       1 YES
       2 NO

Note

XXXX represents the previously entered lead distance.

14. Respond to the VERIFY OFFSET cue.

    a. If decision 1 is selected:

       (1) The weapon FTP is displayed at the computed release point such that the weapon water entry will occur on the entered bearing at the entered distance ahead of the hooked track.

       (2) RLSE switch lights amber.

    b. If decision 2 is selected, the ENT OFFSET-YDS cue is redisplayed.

Note

- If multiple mines or practice bombs have been selected for release, a weapon FTP will appear at the first release point. After release of the first weapon, the weapon FTP will automatically move to the next release point. This sequence will repeat itself until all selected weapons have been released.

- If multiple cluster bombs are selected for release, a single FTP and a single splash point will be displayed. The splash point will be centered on the aimpoint. The release points of weapon trains with spacing of 500 yds or less are based on time-distance calculations.

- The Harpoon weapon FTP is utilized for steering purposes only. Because the GPDC places the Harpoon weapon FTP 550 yards inside the Harpoon minimum release envelope, the missile will not release upon FTP capture.

- For on-line capture of the Weapon FTP, both the Navigation Selector Panel and FMS Panel must be in Computer position for the Pilot/Copilot station.

DEACTIVATION:

1. WPN FTP is deactivated when one of the following occurs:
   a. The FTP is captured.
   b. The selected weapon(s) are deselected.
   c. The mode select switch is changed from AUTO to MAN.
   d. Another cueing sequence is initiated before the weapon FTP sequence is completed.
   e. The FTP is removed from the display through CLR PT DATA or DSTRY DATA.
2. Deactivation results:
   a. Weapon FTP is cleared from the display.
   b. RLSE switch changes from amber to black.
   c. All weapon option select switches change from black to green if a weapon is available.
   d. Modifies the KILL STORES INVENTORY tableau (AUTO mode only).
   e. Modifies the ACP (AUTO mode only).
   f. Displays the following alerts to the pilot (AUTO mode only):

      TURN OFF MSTR ARM
      CLOSE BOMB DOORS

3.14.11.1.6 MSL Option. Refer to NAVAIR 01-S3AAB-1A Supplemental NATOPS Flight Manual.

3.14.11.1.7 HRPN MSL SIM Option. Refer to NAVAIR 01-S3AAB-1A Supplemental NATOPS Flight Manual.

3.14.11.1.8 SUS Option

TACCO
SENSO
COTAC

KILL STORES

PURPOSE:

Selects a SUS for release.

PREREQUISITES:

1. KILL STORES/KIL STR matrix is active.
2. AUTO/MAN switch on the search stores control panel is in the AUTO position.
3. Weapon selection functions are inactive at all stations.
4. ARM/ORD initialization is not in progress.
5. SUS stores are available.

PROCEDURE:

1. Press SUS (lights amber).
   a. Other weapon selections at all stations become unavailable.
   b. The following cue appears:

      SEL TYPE
      1 S84-1
      2 S84-2
      3 S84-3
      4 S84-4

2. Respond to the SEL TYPE cue.
   a. Press a number on the keyset to select the desired type.
3. Press ENTER.
   a. If the following alerts appear:
      (1) On the activating operator's MPD:

          SRCH PWR OFF

      (2) On the pilot display:

          TURN ON SRCH PWR

      (3) SRCH PWR cue light is lighted at the pilot station.
      (4) Pilot responds by switching the SRCH PWR switch to ON.
          (a) Alerts in (1), (2), and (3) are erased.

b. If no other alert is displayed, the operator must activate the SEARCH STORES matrix to have the RLSE function available.

c. RLSE on the SEARCH STORES matrix lights amber.

d. SUS is ready for release.

Note

A SUS is dropped with an expendable FTP, not a weapon FTP.

DEACTIVATION:

1. SUS is deactivated when one of the following occurs:

   a. Search stores control panel AUTO/MAN switch is set to the MAN position.

   b. SUS is pressed when amber.

   c. Another function is activated requiring the use of the cueing area.

   d. The selected SUS is released.

2. Deactivation results:

   a. SUS changes from amber to green.

   b. RLSE switch changes from amber to black.

   c. Any SUS selected for release is deselected.

3.14.11.1.9 RLSE Option

TACCO
SENSO
COTAC

RLSE

KILL STORES

PURPOSE:

Allows the COTAC, TACCO, or SENSO to launch selected weapons.

The on-line selection of more than one weapon of the same type will allow the on-line release of all selected weapons at the selected spacing, with only one depression of the kill stores release option. This is valid both with or without a weapon FTP.

PREREQUISITES:

1. KILL STORES/KIL STR matrix is active.
2. A KILL STORE has been selected and prepared for release.
3. MASTER ARM switch at the pilot station is ON.
4. Bomb bay doors are open (if applicable).
5. AUTO/MAN switch on the ACP is in the AUTO position (conventional weapons).
6. Rack is unlocked.
7. For automatic release — a weapon FTP is entered on the MPD, except for the Harpoon missile.

PROCEDURE:

1. Operator chooses either manual or automatic release.

   a. For manual release, proceed to step 2.

   b. For automatic release, proceed to step 3.

2. Press RLSE (changes to black).

   a. If no alert appears, the following occurs:

      (1) The selected kill store is released.

      (2) A weapon splash point appears on the MPD.

      (3) The KILL STORES INVENTORY tableau is updated.

      (4) The applicable option select switch changes from amber to green.

3. Automatic release — aircraft captures a weapon FTP.

   a. RLSE changes from amber to black.

   b. If no alert appears, the following occurs when the FTP is captured:

      (1) The selected KILL STORE is released.

      (2) The KILL STORES INVENTORY tableau is updated.

c. If the following alert appears:

ZZZZ NO DROP STA X

(1) The weapon failed to release at the indicated station.

(2) The letter D appears in the defects column of the KILL STORES INVENTORY tableau.

d. If the following alert appears:

ZZZZ ARM CONT DEF

(1) Three successive attempts to release the weapon have failed.

(2) Function deactivates.

e. The following alerts appear on the pilot display:

TURN OFF MSTR ARM
CLOSE BOMB DOORS

(1) MSTR ARM cue light is lighted at the pilot station.

(2) Pilot responds by switching the MASTER ARM switch to OFF and pressing the DOORS switch on the ACP.

(a) Alerts in (1) and (2) are erased.

(b) WPN FTP switch changes from green to black.

(c) RLSE switch changes from amber to black.

DEACTIVATION:

1. RLSE is deactivated when one of the following occurs:

a. RLSE switch is pressed when amber.

b. A weapon FTP is captured.

c. The selected weapon(s) are deselected.

d. The MAN mode is selected.

e. MASTER ARM switch set to OFF.

f. Bomb bay doors are closed if the selected weapons are in the bomb bays.

g. Landing gear is lowered.

2. Deactivation results:

a. RLSE switch changes from amber to black.

b. All KILL STORES option select switches change to green.

c. WPN FTP switch changes from green to black.

3.14.11.1.10 TGT AIDS Option. Refer to NAVAIR 01-S3AAB-1A Supplemental Flight Manual for TGT AIDS procedures.

3.15 REINITIALIZATION

3.15.1 Kill Stores. The armament system may be reinitialized through the following:

1. SYSTEM STATUS tableau.
2. REINIT matrix and the ARM/ORD option (TACCO, SENSO stations).
3. RNZ matrix and the ARM/ORD option (COTAC station).
4. PRGM CONT matrix and the REINIT SYSTEM option (COTAC, TACCO, SENSO stations).
5. Program reload.

Reinitialization results in the following:

1. If the flight station ACP AUTO/MAN switch is in MAN:

a. An E appears in the defective column of the KILL STORES INVENTORY tableau at all weapons stations.

2. If the flight station ACP AUTO/MAN switch is in AUTO:

a. A D appears in the defective column of the KILL STORES INVENTORY tableau at all weapons stations that fail status check.

3. If the flight station ACP AUTO/MAN switch is in AUTO and the status check is complete:

   a. The KILL STORES option select switches light green.

Note

Refer to NAVAIR 01-S3AAB-1A Supplemental NATOPS Flight Manual for Harpoon reinitialization procedures.

3.15.2 Search Stores. The search stores system may be reinitialized through the following:

1. SYSTEM STATUS tableau.
2. REINIT matrix and the ARM/ORD option (TACCO, SENSO stations).
3. RNZ matrix and the ARM/ORD option (COTAC station).
4. PRGM CONT matrix and the REINIT SYSTEM option (COTAC, TACCO, SENSO stations).
5. On the manual search store control panel, select AUTO on the AUTO/MAN switch (must be in MAN at least 3.0 seconds prior to selecting AUTO).
6. Program reload.

Reinitialization results in the following:

1. If the TACCO AUTO/MAN switch is in MAN, or the SONO SAFETY switch is open:

   a. An E appears in the D (defective) column of the SEARCH STORES INVENTORY tableau for all SLCs except those for which a defect has previously been reported, in which case a D will be displayed.

2. If the TACCO AUTO/MAN switch is in AUTO and the SONO SAFETY switch is closed:

   a. A D appears in the defective column of the SEARCH STORES INVENTORY tableau at each SLC that fails continuity check.

3. If the TACCO AUTO/MAN switch is in AUTO, the SONO SAFETY switch is closed and the SLC continuity check is complete:

   a. The SEARCH STORES option select switches light green.

   b. The EXP FTP option select switch lights green.

3.16 ELECTRONIC COUNTERMEASURES SYSTEM

The AN/ALE-39 ECM system provides self-protection against enemy radar and infrared missiles by dispensing chaff, flare, and jammer payloads. The system is capable of dispensing up to 90 payloads, 30 from each of three dispenser modules. Payloads can be dispensed individually or in programmed release sequences by either the pilot, COTAC, or TACCO.

The system consists of the components shown in Figure 3-47. These components are logically and electrically interconnected as shown in Figures 3-48 and 3-49.

3.16.1 System Operation. System control is available at the pilot, COTAC, and TACCO stations. Both pilot and COTAC may initiate ECM stores release by depression of the payload initiate switch located on the No. 2 throttle at each station. In addition, the pilot controls include ECM ARM and ECM SELECT switches on the throttle panel. The ECM ARM switch provides the pilot with the ability to withhold electrical power for release giving him ultimate release authority for ECM stores. The ECM SELECT switch determines the type of store to be dispensed on depression of either pilot or COTAC ECM initiate switches.

TACCO ECM controls include the ability to initiate stores release, select the mode of release to be initiated, and program the release sequence and salvo flares in the event of an emergency.

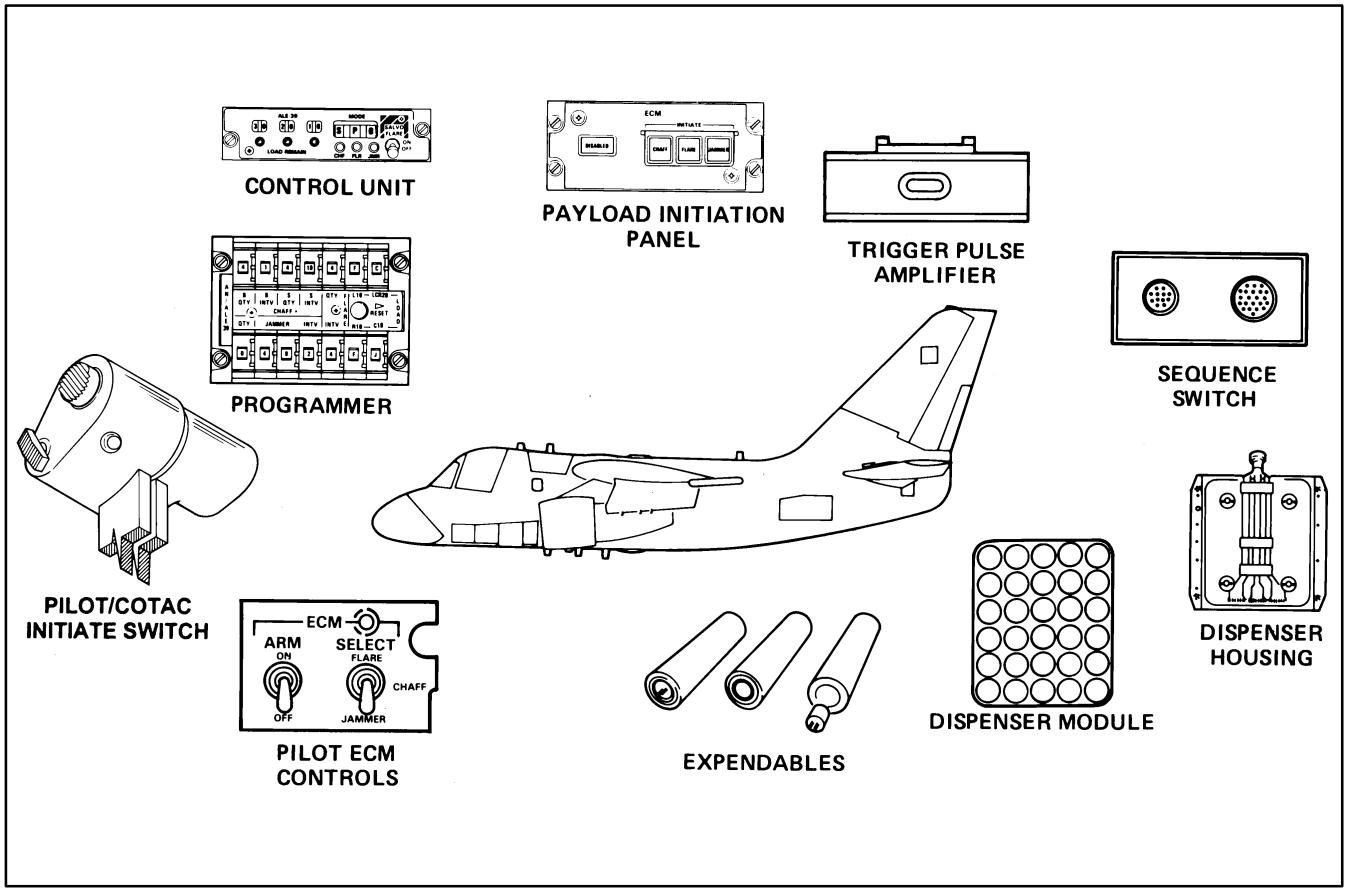

Figure 3-47. ECM System Components

3.16.2 Control Unit. The ECM control unit (Figures 3-50 and 3-51) allows the TACCO to monitor the quantity remaining and select a mode of release for each type of expendable. Additionally, the ON/OFF/SALVO FLARE toggle switch allows for emergency jettison of all flares.

Three LOAD REMAIN push-to-turn rotary switches allow setting of initial chaff, flare, and jammer quantity counters. These should be checked and set at the beginning of each flight carrying ECM expendables. The counters automatically decrement following a successful programmer/control unit handshake. Only if the ALE-39 system is operating properly and the operator has correctly entered stores quantity prior to operation will the LOAD REMAIN windows accurately display expendables remaining.

Note

If no selectable load thumbwheel on the ECM programmer indicates CHAFF or JAMMER or no payload remains, the LOAD REMAIN counter will decrement one payload for each chaff or jammer initiated for release causing the LOAD REMAIN windows to inaccurately display actual expendables remaining.

Three momentary action pushbutton switches provide CHAFF, FLARE, and JAMMER mode selection. (See Figure 3-51 for details.)

Note

The pilot ECM ARM switch must be ON in order to SALVO FLARE expendables.

The ON/OFF/SALVO FLARE toggle switch applies 28 vdc and 5 vac power to the programmer ECM initiate panel when the pilot ECM ARM switch is ON. Selecting the SALVO FLARE position will jettison all remaining chutes whose programmer “LOAD” is set to FLARE (F) regardless of whether or not flares are actually loaded.

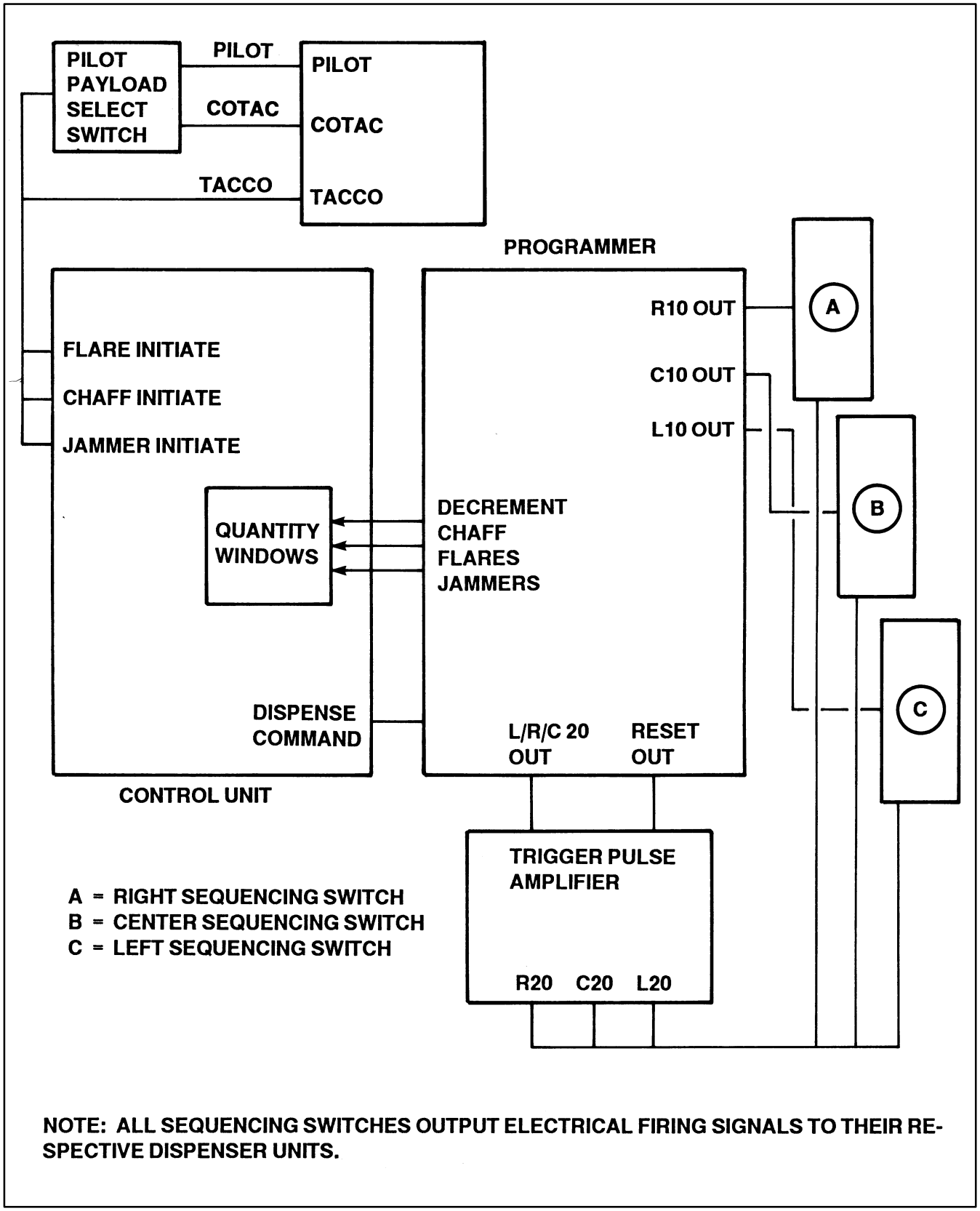

Figure 3-48. ECM Block Diagram

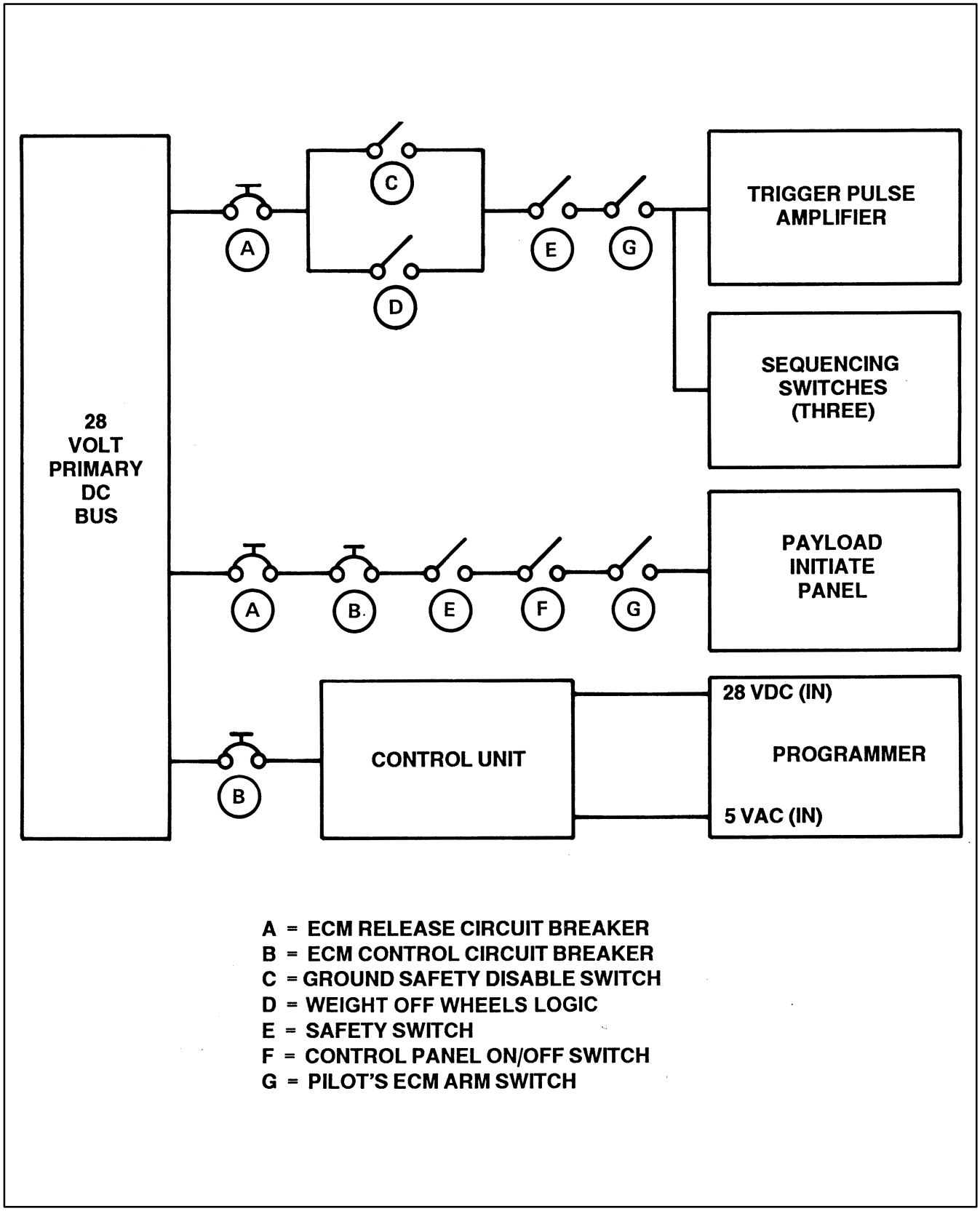

Figure 3-49. ECM System Components

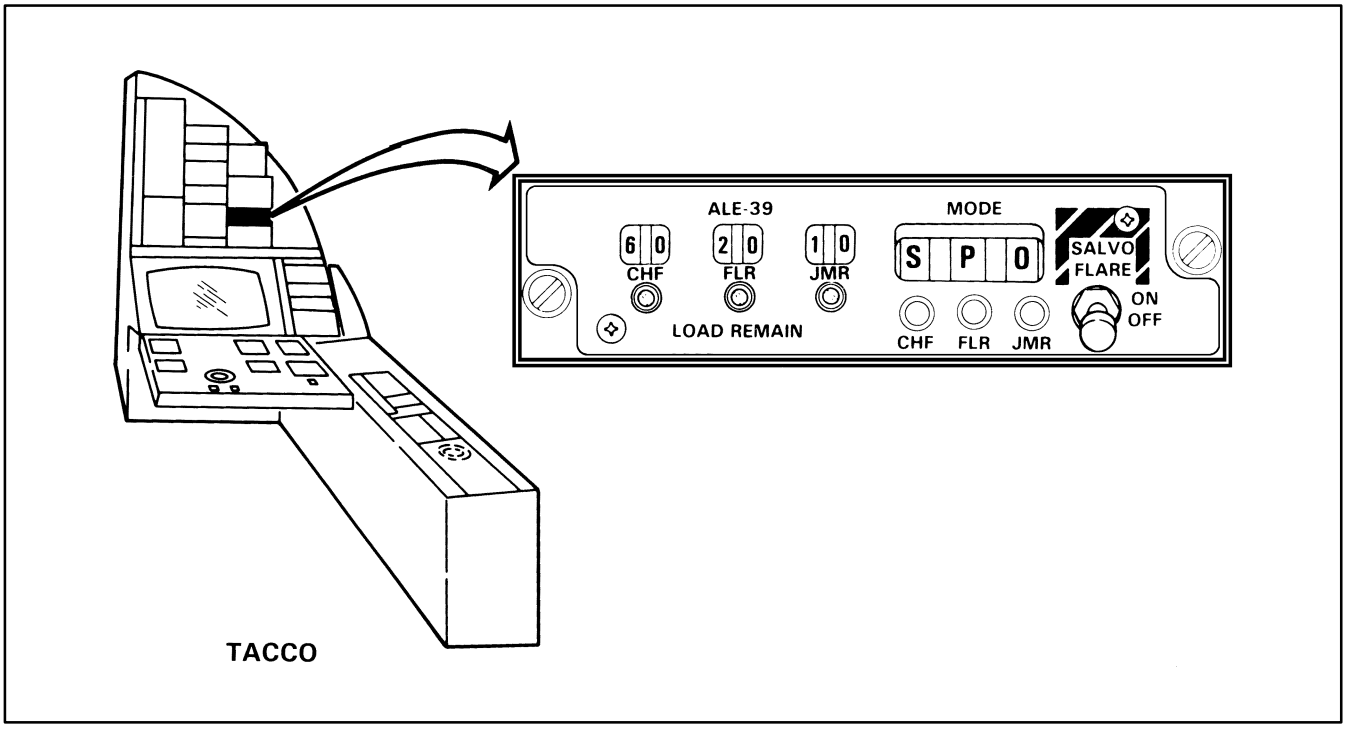

Figure 3-50. ECM Control Unit

Note

- The ON/OFF switch must be pulled out then lifted into the SALVO FLARE position for emergency jettison.

- Normal ECM stores release is not possible unless the control unit ON/OFF/ SALVO FLARE toggle switch is in the ON position.

3.16.3 ECM Programmer. The ECM programmer (Figures 3-52 and 3-53) located at the TACCO station, provides thumbwheel selection of desired payload type, quantity to be dispensed, and time interval between expenditures. Selectable LOAD thumbwheels (C, F, J) indicate the location of the various payload types in each of the four logically separated partitions (L10, R10, C10, and LCR 20). The programmer uses these window selections to determine where to find a particular type of store when its release is requested by the operator. The programmer is unable to determine actual store load. Ensure the actual load in each partition and the programmer LOAD thumbwheels match exactly.

The programmer decodes dispense commands received from the control unit and sends trigger pulses to either the trigger pulse amplifier (if the destination is a "20" partition) or directly to the sequencing switches (if the destination is a "10" partition). The number of firing pulses sent is dependent on the MODE selected on the control unit and, with program (P) or group (G) selected, the quantity selected on the programmer. The programmer is capable of dispensing all three types of expendables independently or concurrently.

When multiple or group release is not indicated by the control unit, the programmer will dispense payloads of the same type from modules in the following order: L10, LCR20 (L20, C20, R20), R10, then C10.

Note

When multiple or group release is not indicated by the control unit, the programmer will dispense the payload in L20 first, followed by C20, then R20. Firing pulses will be sent in that order regardless of stores load. When using partial loads, the programmer must be sequenced through the empty buckets in order to fire stores. With one full bucket, use of the left bucket is recommended; with two full buckets, use of the left and center is recommended.

A springloaded RESET toggle switch, used during preflight, establishes a consecutive launch tube firing

INDEX	CONTROLS/ INDICATORS	POSITION	INDICATION	FUNCTION
1	LOAD REMAIN push-to-turn rotary switches	CHAFF, FLARES, JAMMERS	Counters indicate quantities of payloads remaining	Quantities are set in during preflight. As payloads are ejected, counters decrement accordingly.
2	MODE momentary action push-button switches	CHF	S	SINGLE — One payload will be ejected when initiated.
			P	PROGRAM — Payload ejection sequence is based on quantities and time interval set into ECM programmer.
			RWR	RADAR WARNING RECEIVER **Note** Currently not operational. RWR mode selection operates same as SINGLE mode.
			O	OFF — No payloads will be ejected.
		FLR	S	SINGLE — One payload will be ejected.
			P	PROGRAM — Payload ejection sequence is based on quantities and time interval set into ECP programmer
			RWR	RADAR WARNING RECEIVER **Note** Currently not operational. RWR mode selection operates same as SINGLE mode.
			M	MULTIPLE — One payload will be ejected from each dispenser module partition that indicates flares loaded.
			G	GROUP — Series of payloads will be ejected from all dispenser module partitions that indicate flares loaded based on ECM programmer entered quantities and time intervals.
			O	OFF — No payloads will be ejected.
		JMR	S	SINGLE — One payload will be ejected when initiated.
			P	PROGRAM — Payload ejection sequence is based on quantities and time interval set into ECM Programmer.

Figure 3-51. ECM Control Unit Off-Line Controls (Sheet 1 of 2)

INDEX	CONTROLS/ INDICATORS	POSITION	INDICATION	FUNCTION
2 (cont.)		JMR (cont.)	RWR	RADAR WARNING RECEIVER **Note** Currently not operational. RWR mode selection operates same as SINGLE mode.
			O	OFF — No payloads will be ejected.
3	POWER	ON/OFF SALVO FLARE		Applies/removes power from ECM system. Emergency jettison of all flare payloads within 2.5 to 7 seconds. **Note** • Switch must be pulled out then lifted into SALVO FLARE position. • The flare load remain counter may be inaccurate after a salvo flare.

Figure 3-51. ECM Control Unit Off-Line Controls (Sheet 2)

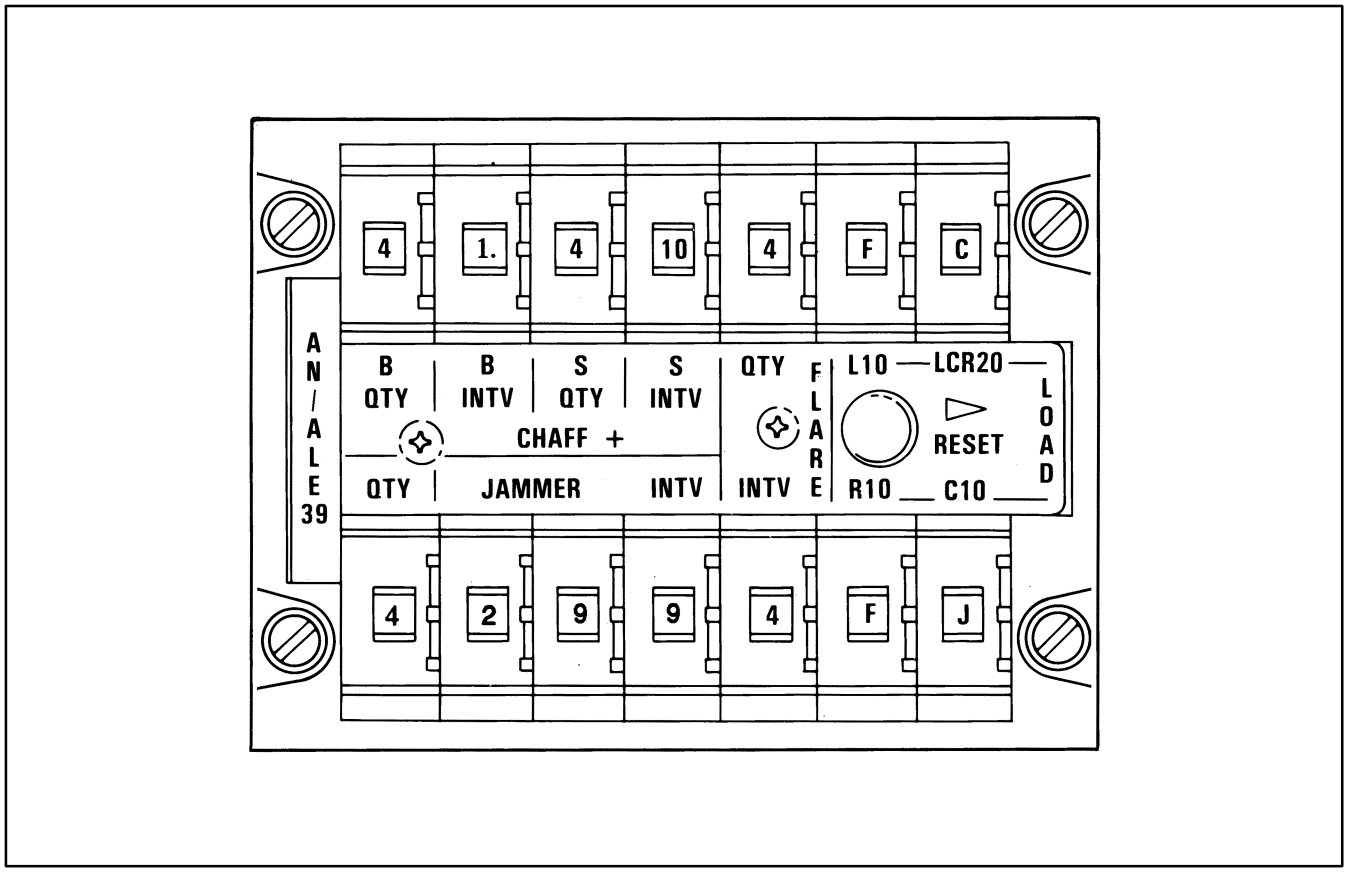

Figure 3-52. ECM Programmer

INDEX	CONTROLS/ INDICATORS	POSITION	INDICATION	FUNCTION
1	LOAD	LCR20	C, F, J thumb-wheel switches	Indicates payload type loaded in the left, right, and center dispenser module launch tubes 11-30. **Note** • When multiple or group release is not indicated by the control unit, the programmer will dispense the payload in L20 first, followed by C20, then R20. Firing pulses will be sent in that order regardless of stores load. When using partial loads, the programmer must be sequenced through the empty buckets in order to fire stores. With one full bucket, use of the left bucket is recommended; with two full buckets, use of the left and center is recommended. • The system has been modified to incorporate three dispensers. The LCR 20 trigger and firing circuits are wired to include L20, C20, and R20.
		L10	C, F, J	Indicates payload type loaded in the left dispenser module launch tubes 1 through 10.
		R10	C, F, J	Indicates payload type loaded in the right dispenser module launch tubes 1 through 10.
		C10	C, F, J	Indicates payload type loaded in the center dispenser module launch tubes 1 through 10.
2	RESET Toggle Switch	Spring-loaded		When lifted and moved to the right, resets the sequence switches to launch tubes 1 and 11 of each dispenser module. **Note** • When activated, hold in RESET position for 5 seconds to ensure all sequencing switches have completely reset. • Should be used during preflight. Actuation after payloads have been ejected will cause system to reset without regard to empty launch tubes.
3	FLARE	QTY	2, 3, 4, 6, 8 or 10	Quantity of flares to be dispensed in one programmed sequence.
		INTVL	2, 4, 6, 8 or 10	Interval in seconds between each dispense.
4	CHAFF	B QTY	1, 2, 3, 4, C or R	Burst quantity in each salvo sequence C = Continuous bursts R = Random bursts in each salvo with 4 minimum and 6 maximum.

Figure 3-53. ECM Programmer Controls (Sheet 1 of 2)

INDEX	CONTROLS/ INDICATORS	POSITION	INDICATION	FUNCTION
4 (cont.)		B INTVL	.1, .2, .5, .7, 1, or R	Burst interval in seconds between each burst in one salvo. .1 = 0.125 seconds .2 = 0.25 seconds .5 = 0.5 seconds .7 = 0.75 seconds 1 = 1 second R = Burst interval is random. With CHAFF B QTY in C, first salvo will be 0.125 seconds apart, with remaining bursts being dispensed at random intervals of 0.25, 0.50, 0.75, 1.0, 2.0, 3.0, or 4.0 seconds. With CHAFF B QTY in R, first three bursts of the first salvo will be 0.125 seconds apart, with the remaining salvos being dispensed at the CHAFF S INTV rate with four to six bursts/salvo. With CHAFF B QTY not in R or C, a single chaff package is ejected.
		S QTY	1, 2, 4, 6, 8, 10 or 15	Number of SALVOs in one programmed sequence.
		S INTVL	2, 4, 6, 8 or 10	Salvo interval in seconds between each salvo.
5	JAMMER	QTY	1, 2, 3 or 4	Quantity of jammers to be dispensed in one programmed sequence.
		INTVL	000–299	Interval in seconds between each dispense. **Note** • The control unit ON/OFF/SALVO FLARE toggle switch must be in the ON position to reset sequencing switches. • Entry of 000 — Only one payload will be dispensed regardless of jammer quantity selected.

Figure 3-53. ECM Programmer Controls (Sheet 2)

order of 1 to 10 for the "10" partition and 11 to 30 for the "20" partition in each dispense module.

Note

- The RESET toggle switch must be pulled out, moved to the right, and held for at least 5 seconds to ensure all sequencing switches have been fully reset.
- Use of the RESET switch after previously expending stores will reset sequencing switches to launch chutes that have already been fired and may result in failure of stores to dispense when requested.

3.16.4 ECM Initiate Panel. The ECM Initiate panel (Figures 3-54 and 3-55) located at the TACCO station, has three momentary action pushbutton switches labeled CHAFF, FLARE, and JAMMER. Illumination of these switches and the ECM ready light indicates that all conditions are correct for stores release, including: ECM release and control circuit breakers (3-0-13 and 3-P-14) IN, ECM safety pin removed, ECM control panel power ON, Pilot ECM ARM switch ON, and weight-off-wheels (or simulated by ground safety disable switch). Activation of these switches initiates the dispense sequence requested by the MODE setting on the control panel for that payload type. The DISABLED indicator illuminates red when the ECM safety pin is installed.

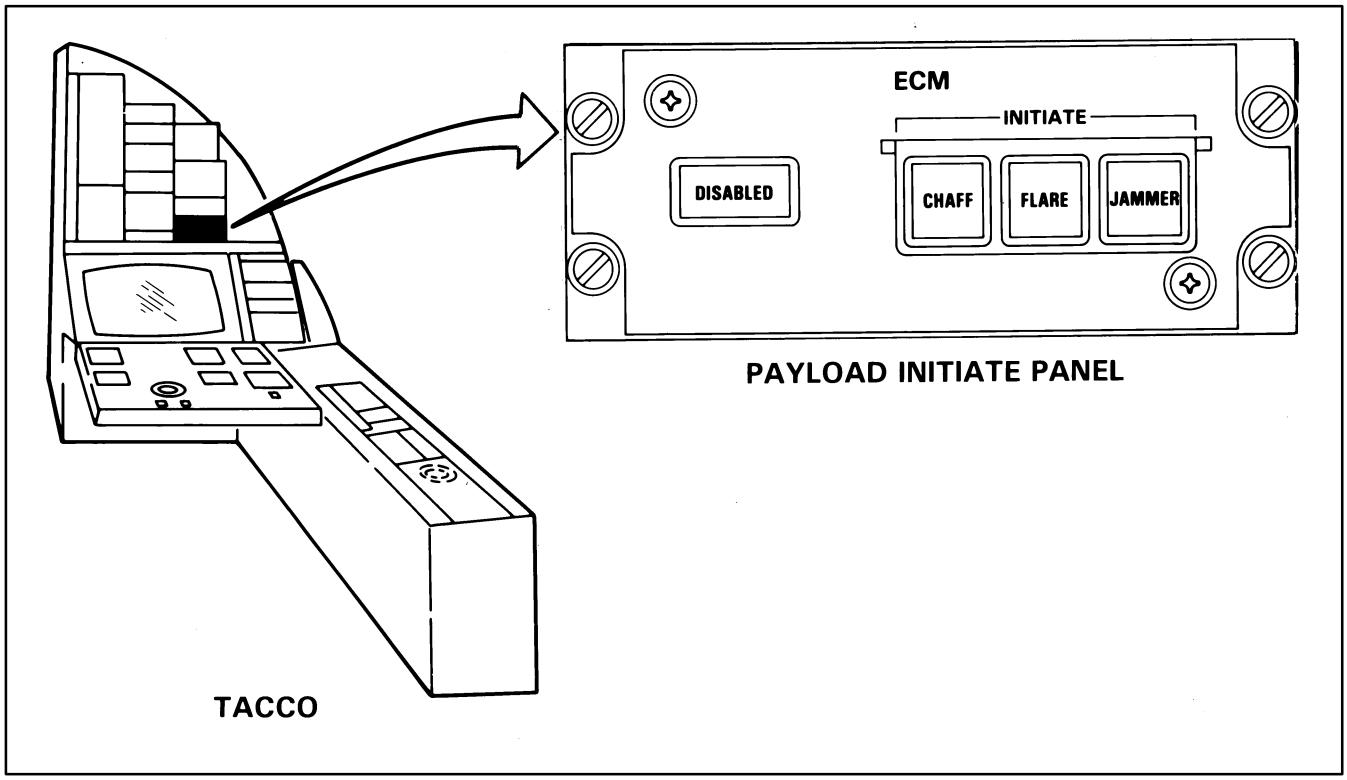

Figure 3-54. ECM Initiate Panel

INDEX	CONTROL/INDICATOR	FUNCTION
1	DISABLED	Illuminates red when the ECM safety pin is installed in the dispenser safety switch. **Note** Power must be applied for light to illuminate. Extinguishes when safety pin is removed.
2	INITIATE Momentary Action Pushbutton Switches (Illuminated)	CHAFF — When depressed, initiates dispense based on chaff mode selected on Control Unit. FLARE — When depressed, initiates dispense based on flare mode selected on Control Unit. JAMMER — When depressed, initiates dispense based on jammer mode selected on Control Unit. **Note** • ECM Control Unit power switch must be ON. • Pilot's ECM ARM switch must be ON.

Figure 3-55. ECM Initiate Panel Controls and Indicators

Note

The DISABLED light is the only internal indication that the ECM safety pin is installed. Failure to remove this pin prior to takeoff will prevent release of ECM stores in flight.

3.16.5 Trigger Pulse Amplifier. The TPA is located in the ECS compartment. The TPA receives all dispense commands sent by the programmer directed for any of the 20 partitions and routes them to the correct sequencing switch. Additionally, the TPA serves to route a reset signal originating from the programmer to the sequencing switches.

3.16.6 Sequencing Switches. Three sequencing switches located in the ECS compartment receive trigger pulses and reset signals from the TPA and dispense commands from the programmer. They generate and route firing pulses to specific dispenser modules and launch tubes.

Note

Sequencing switches are not automatically reset with removal of electrical power between flights. Failure to reset the sequencing switches via the programmer RESET switch may result in incorrect dispense order.

3.16.7 Dispenser Housings and Modules. There are three dispenser units as shown in Figure 3-56. Each unit contains a permanently mounted dispenser housing and a removable dispenser module. The modules are removed from the housings to facilitate remote loading and are placed in the housings prior to takeoff.

Each module (Figures 3-56 and 3-57) contains 30 consecutively numbered launch tubes, each electrically divided into two partitions. Launch tubes 1 through 10 comprise the "10" partition and 11 through 30 comprise the "20" partition. Each partition is identified by the location of the module on the aircraft (left, center, and right) and the partition size (10 or 20).

Note

- All expendables loaded into the same partition should be the same type.
- Because of the addition of the third dispense circuit, all expendables loaded into the "20" partitions of all three dispenser modules should be the same type.

3.16.8 Dispenser Safety Switch. The dispenser safety switch, located on the bottom of the fuselage just inboard of the sonobuoy safety switch, electrically isolates the ECM Dispenser modules preventing inadvertent firing of payloads when the ECM safety pin is installed.

WARNING

Failure to install the ECM safety pin in the dispenser safety switch prior to loading dispenser modules into the dispenser housings could cause inadvertent launch tube firing.

3.16.9 ECM Safety Disable Toggle Switch. The ECM safety disable toggle switch, located on the right-hinged circuit breaker panel, simulates weight-off-wheels for ground testing of the ECM system.

WARNING

On deck maintenance troubleshooting, including use of the ECM safety disable toggle switch with ECM stores installed, may result in inadvertent launch tube firing.

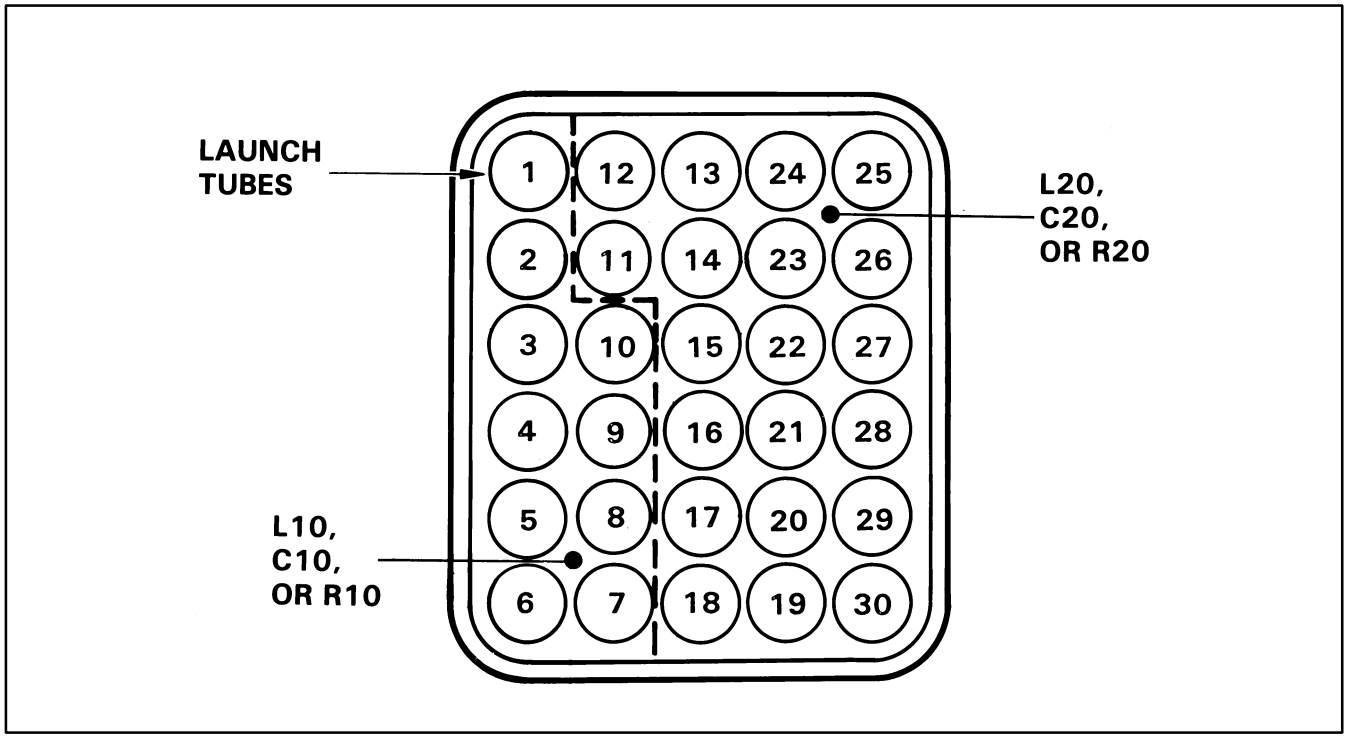

Figure 3-56. Dispenser Module Partitioning

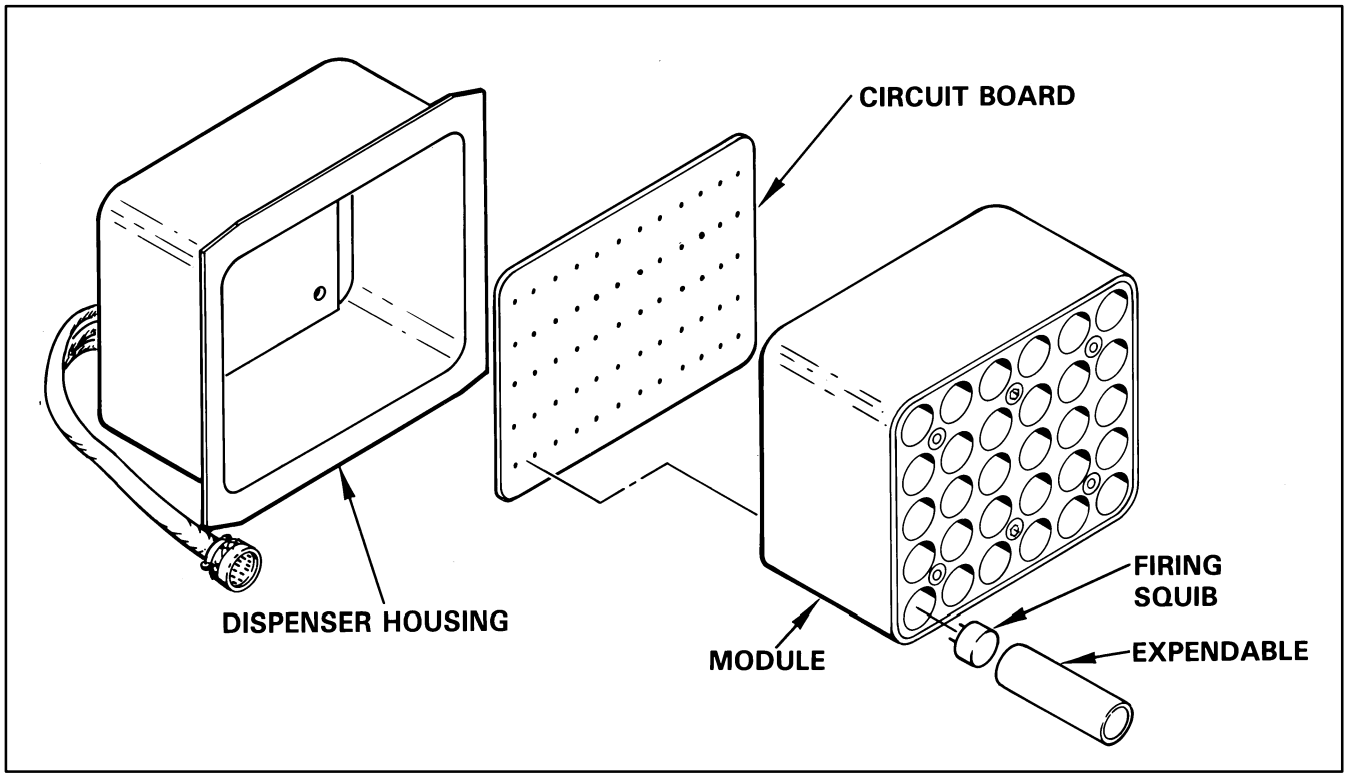

Figure 3-57. Typical Expendable

PART III

Navigation

Chapter 4 — Navigation

CHAPTER 4

Navigation

4.1 NAVIGATION

4.1.1 Introduction. The S-3B employs an integrated navigation system capable of doing extended periods of time when external navigation aids are limited or unavailable.

The navigation system consists of several hardware systems, including complete off-line inertial navigation, GPS, and the GPDC navigation subprogram. The GPDC navigation subprogram is dependent upon the hardware systems for all measurements necessary to describe the aircraft's motion. The navigation hardware systems, described in NAVAIR 01-S3AAB-1, are operated through on-line controls at the pilot, COTAC, and TACCO stations in varying degrees. The hardware configuration is depicted in Figure 4-1.

The GPDC navigation subprogram continuously collects data from the hardware systems, computes basic navigation parameters, aircraft position, and produces several specific operator aids. The navigation subprogram also provides data to 10 other subprograms.

The navigation subprogram, controlled on-line through the INCOS GEO NAV matrix, communicates with the operator through TACPLOT annotations, peripheral readouts, and the following tableaus:

1. NAV preflight
2. NAV status
3. NAV parameters.

The navigation program provides position information relative to the real world, in latitude and longitude coordinates, and is employed throughout flight.

4.1.2 Source Selection Criteria. During every navigation update period (20 per second), the navigation subprogram collects and records available navigation source information. The subprogram checks the validity signals that accompany each piece of data to determine what information is usable. The data are then processed according to established navigation priorities.

Each hardware system adds a validity indication to the data that it sends to the GPDC. The validity indication is determined by the hardware from a sum of key conditions such as voltage and signal levels, together with logic associated with particular operating modes. The validity is strictly a Go/No-Go indication and is not an indication of accuracy.

The Navigation sensor data sources for the most part will be determined off-line from the GPDC using the CDNU. The CDNU provides for automatic changes in Nav sensor sources based on the availability and operability criteria for the Nav sensors; as well as, providing the ability to the operator to manually select Nav sensor sources. (Reference CAINS II In-Flight Procedures Guide). Nav sensor data will be provided to the GPDC navigation subprogram, via the NIU, based on the current Nav Select source mode.

The Nav sensor source data, which are continually requested by the GPDC from the NIU, is accompanied by validity information originating from the Nav source sensor. The GPDC also receives all changes in status of the off-line Nav sensors. The GPDC will provide an alert to the operator if certain validity and status criteria are not met, and under certain circumstances will change priorities or take other default actions as described for individual parameters throughout this Navigation Section.

The GPDC navigation subprogram operates in one of two dead reckoning modes that influences which velocity source is used. The priority of these two dead reckoning modes and related velocity sources used for updating both geographical and tactical positions are provided in descending order as follows:

1. INAV (velocity data from Navigation sensors on 1553 bus via NIU)
2. AIR DATA (velocity data derived from SCADC TAS over type 1 line)

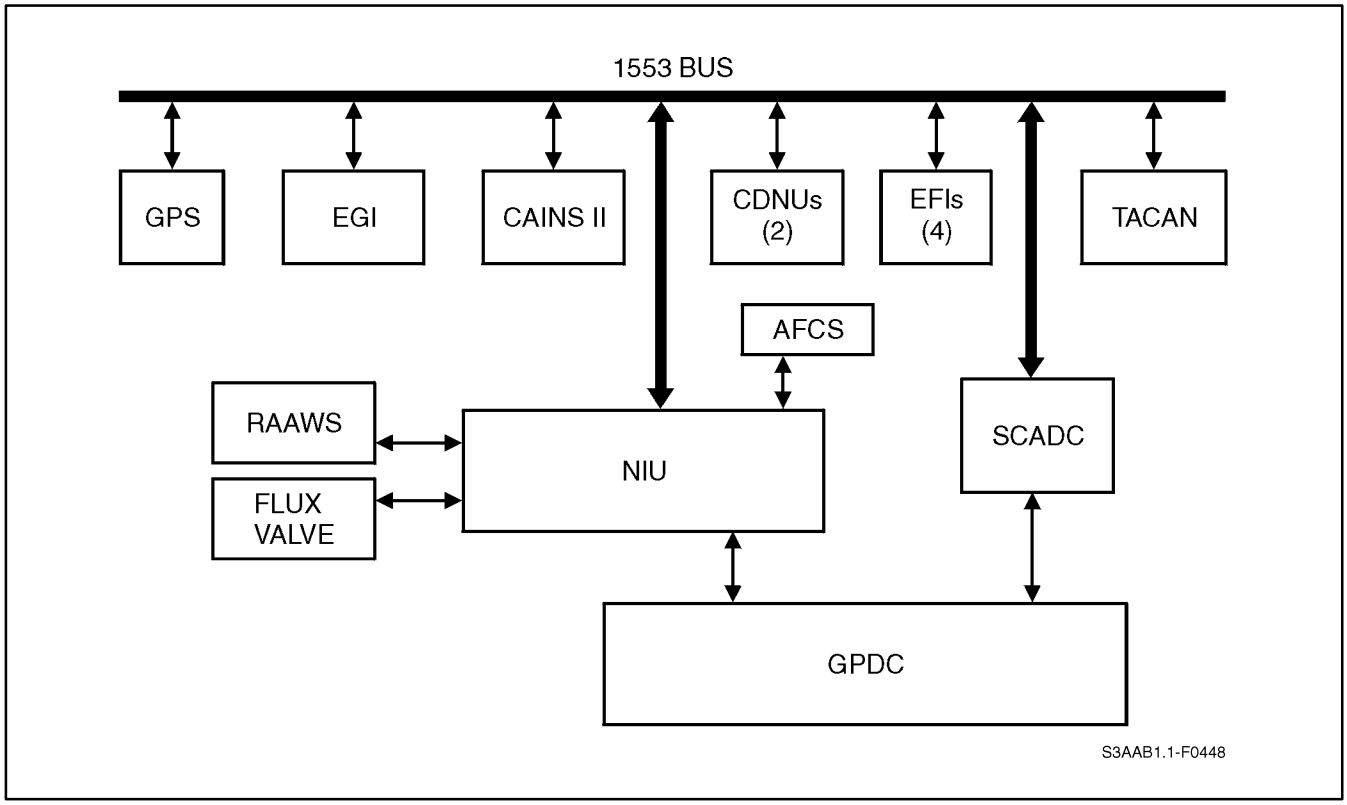

Figure 4-1. Navigation Subsystem Block Diagram

This priority order is effectively a second layer of priorities below the Nav Select sensor source priorities established in the CDNU. The GPDC navigation subprogram will invariably be operating in DR mode 1 above. The navigation subprogram will automatically degrade into DR mode 2 only upon receipt of specific combinations of sensor status and validity information. The operator cannot change dead reckoning mode priorities within the GPDC navigation subprogram.

4.1.3 Velocity Defects. When the navigation subprogram receives invalid velocities from the NIU, the following system alert appears on all MPDs and the pilot display:

ZZZ SYS VEL DEF

ZZZZ represents the time when the alert appeared. The alert informs the crew that the velocity information being received from the NIU is defective, and is not currently being used as a navigation source.

Note

The ZZZZ SYS VEL DEF alert appears if the navigation subprogram receives invalid velocities from the NIU for five consecutive update intervals, or if a No-Go status is received for the velocity source corresponding to the NAV Select mode, or if both NIU channels are disabled.

If the GPDC detects a fault in the output of either channel of the SCADC, it will show SCADC defected in the system status tableau, and display the alert SCADC VEL DEF, and automatically revert to the remaining channel for navigation data. Only if a fault is detected in both channels will the SCADC be defected and disabled in system status.

4.1.4 DR DEF (Dead Reckoning Defect) Alert. When the navigation subprogram records all velocity sources and both heading/attitude sources are invalid, the following alert appears at all stations:

DR DEF

1. Check NAV system hardware circuit breakers.

2. If CDNU System Status pages or Flight Instruments are likewise indicating that the navigation situation is down or degraded, follow the operations described in the CAINS II In-Flight Procedures Guide to assess the situation and attempt to bring Navigation back into a stable Nav Select mode.

3. Check GPDC NAV Status Tableau. If any NAV Sensors are reported No-Go or non-aligned, follow the operations described in the CAINS II In-Flight Procedures Guide to attempt to bring Nav Sensors back up.

4. Check SYSTEM STATUS Tableau and reinitialize any defected or disabled navigation hardware (NIU1, NIU2, SCADC).

5. Update GPDC GEO position with a GEO correct.

When at least one heading source, one attitude source, and one velocity source become available to the GPDC, the DR DEF alert will be removed and all GPDC positions will commence automatically from the point at which they had been terminated.

4.1.5 Heading Selection. The source of heading data, which is provided to the GPDC navigation subprogram, is determined by the Nav Select source mode within which the navigation system is currently operating under control of the CDNU. The source and type of heading provided to the GPDC for each of the Nav Select Modes are as follows:

#	NAV SELECT MODE	HEADING SOURCE	HDG TYPE
1	EINS/EGPS	EINS	True
2	CAINS/MAGR	CAINS II	True
3	CAINS	CAINS II	True
4	EINS	EINS	True
5	EGPS	Flux Valve	Mag
6	MAGR	Flux Valve	Mag
7	CDNU (DR)	Flux Valve	Mag
0	None/Fail	Flux Valve	Mag

When a true heading source is received (the only source of true heading is the EINS or CAINS operating in an inertial mode), the navigation subprogram computes a corresponding magnetic heading by algebraically subtracting magnetic variation from the true heading. When a magnetic heading source is received, true heading is computed by algebraically adding magnetic variation to magnetic heading. True heading is displayed in the NAV PARAMETERS Tableau:

THDG XXX

4.1.6 Pitch and Roll. The Navigation subprogram collects valid pitch and roll data as it is received from the inertial source available. The pitch and roll data used is based on the status and priority assigned for attitude data sources, as described below. If all sources of pitch and roll are invalid in either Nav configuration a DR DEF occurs. (The subprogram is unable to compute velocity when pitch and roll data are unavailable, because raw non-inertial velocities cannot be transformed to an Earth reference, and raw TAS cannot be transformed to horizontal and vertical components.)

The navigation subprogram requests pitch and roll data from the NIU, and the NIU returns pitch and roll information corresponding to the NAV Select source mode as follows.

#	NAV SELECT MODE	PITCH AND ROLL SOURCE
1	EINS/EGPS	EINS
2	CAINS/MAGR	CAINS II
3	CAINS	CAINS II
4	EINS	EINS
5	EGPS	EINS*
6	MAGR	EINS*
7	CDNU (DR)	EINS*
0	None/Fail	EINS*

*If EINS pitch or roll data are invalid, pitch and roll data are provided by the CAINS II.

4.1.7 Magnetic Variation. The GPDC navigation subprogram receives magnetic variation from the NIU upon request. Magnetic variation is acquired by the NIU from the CDNU. The CDNU contains a lookup table for magnetic variations. Manual entry of a magnetic variation using the GPDC navigation subprogram is not provided. The CDNU has provisions for operator entry of magnetic variation overriding the lookup table.

Magnetic variation is displayed in the NAV PARAMETERS Tableau:

MVAR ZXXXM
Z = + (East) or – (West); XXX = 0 through 180°

4.1.8 Groundspeed Computation. The navigation subprogram always computes a groundspeed. The computation of the groundspeed is dependent upon which DR mode the aircraft is operating.

When the navigation subprogram is operating normally in DR 1 mode, groundspeed is computed by vector addition of the north-south velocities, the east-west velocities, and an appropriate correction vector received from the NIU.

When the navigation subprogram has degraded to DR mode 2, groundspeed is computed from true heading, true airspeed, wind direction and velocity, and an appropriate correction vector.

Groundspeed is displayed in the NAV PARAMETERS Tableau:

GS XXX
XXX = 0 through 999 knots

4.1.9 Vertical Velocity. Aircraft vertical velocity is used by the FLIR subsystem to stabilize the FLIR picture during aircraft motion. It is also used by the ballistics subprogram in computing splash points. Vertical velocity is set equal to the source system vertical velocity having good validity and the highest priority. Vertical velocity will also be computed by the navigation subprogram as a backup if valid TAS and valid pitch data are available. Vertical velocity is not displayed to the operator on the pilot display or MPDs.

Vertical velocity is derived as follows:

1. When the navigation subprogram is operating normally in DR mode 1 (velocities received directly from the NIU), the source of vertical velocity is dependent on Nav Select Mode as follows:

#	NAV SELECT MODE	VERT VEL SOURCE	VERT VEL TYPE
1	EINS/EGPS	EINS	Inertial
2	CAINS/MAGR	CAINS II	Inertial
3	CAINS	CAINS II	Inertial
4	EINS	EINS	Inertial
5	EGPS	SCADC*	Air Data
6	MAGR	SCADC*	Air Data
7	CDNU (DR)	SCADC*	Air Data
0	None/Fail	SCADC*	Air Data

*These data are derived from the Pressure Altitude Rate output of the SCADC.

2. When the navigation subprogram has degraded to DR mode 2 (velocities derived from SCADC), vertical velocity is derived from valid TAS obtained over the type 1 line and valid pitch data, if available.

4.1.10 True Track and Drift Angle. The navigation subprogram always computes a true track and drift angle. Groundspeed is computed as follows:

When the navigation subprogram is operating normally in DR mode 1 (velocities received directly from the NIU) true track is determined by vector addition of the north-south velocities, the east-west velocities, and an appropriate correction vector. Drift angle is computed by taking the difference between the true heading and true track.

When the navigation subprogram has automatically degraded to DR mode 2 (velocities derived from SCADC), true airspeed for GEO NAV, true track, and drift angle are computed from true heading, true airspeed, wind direction and velocity, and an appropriate correction vector.

True track and drift angle are displayed in the NAV PARAMETERS Tableau:

DRFT YXXX
TRK ZZZ

Y left (minus), right(plus); XXX degrees right or left of long axis of A/C; ZZZ angle measured in degrees, positive clockwise from true north.

4.1.11 Windspeed and Direction. Windspeed and direction are updated by the navigation subprogram five times a second, provided SCADC computed airspeed is available and velocities originating from sources other than SCADC are also available. The NAV PARAMETERS Tableau displays windspeed and direction:

DIR SPD
WIND XXX ZZZ

XXX = 0 TO 359°; ZZZ = 0 to 999 knots

If the wind is modified in the NAV PARAMETERS Tableau when the navigation subprogram is still computing the wind, the readout will be modified, but will gradually return to the computed value.

If windspeed and direction are not automatically updated for 1 minute, the following alert appears on all MPDs and the pilot display:

ZZZZ NO WIND UPDATE

ZZZZ represents the time that the alert was generated.

The alert informs the crew that the navigation subprogram is no longer computing the wind and that the value being used may be erroneous. The operator can, at this time, modify the value in the NAV PARAMETERS Tableau.

Note

- If the subprogram is using SCADC velocities, an accurate wind is required for accurate DR navigation and ballistics.
- If the subprogram is using velocities originating from a source other than SCADC, an accurate wind is required only for ballistics computations.

4.1.12 Altitude. The navigation subprogram updates aircraft altitude five times each second and displays it in the NAV PARAMETERS Tableau:

ALT XX XXXY

X = 0 TO 99,999

Y = B for barometric
M for operator modified (when primary source altitude is invalid)
V for the last stored value when primary source altitude is invalid
R for RAAWS

Note

Invalid altitude causes improper FLIR autotrack performance, erroneous FLIR range readouts, erroneous radar auto tilt and initiate tilt operation, inaccurate ballistics computation, inaccurate TACAN GEO CORRECT updates, and invalid ESM scan strategies.

Lines 18, 19, and 20 of the NAV PARAMETERS Tableau are used to control and display altitude source:

ALTITUDE
MODE XXXXXX
SOURCE YYYYYY
STATUS ZZZZZZ

XXXXXX = SYSTEM or GPDC,
YYYYYY = SYSTEM, AUTO, or BARO
ZZZZZZ = RAAWS, BARO, INVAL, MAN

The altitude maintained and displayed is dependent initially on the altitude mode (System or GPDC), which is selected using line 18 of the NAV PARAMETERS Tableau. In the SYSTEM mode, the altitude used and displayed by the GPDC navigation subprogram is controlled off-line from the GPDC by the NIU using the RAAWS and SCADC as altitude sources. In the GPDC mode, the altitude used and displayed by the navigation subprogram is controlled on-line by the GPDC using RAAWS, SCADC, and manual entries as possible altitude data sources.

In the System altitude mode, there are two submodes that determine the actual sources of altitude data used by the GPDC navigation subprogram. These

submodes are AUTO and BARO. In the Auto submode, using Baro altitude as a reference, the altitude source will be switched to SCADC when the aircraft climbs above 5200 feet (MSL), and will be switched to RAAWS when the aircraft descends below 5000 feet (MSL). Pressure altitude from the SCADC will be used above 18000 feet in either submode. In the Baro submode, the SCADC will always be used as the altitude source, if valid. In the System mode, the submode that is providing altitude data to the navigation subprogram is controlled by the ALT switch on the pilot EFIS panel.

Note

In the System altitude mode, the altitude used and displayed by the navigation subprogram will be the same as the altitude displayed on the pilot EFI. If, however, the NIU channel #1 becomes disabled, the COTAC ALT EFIS switch is in control, and the altitude provided to the navigation subprogram is the same as the altitude displayed on the COTAC EFI.

In the GPDC altitude mode, there are two submodes that determine the actual sources of altitude data used by the Navigation subprogram. These submodes are likewise AUTO and BARO. In the Auto submode, the altitude source will be switched to SCADC when the aircraft climbs above 5100 feet (AGL), and will be switched to RAAWS when the aircraft descends below 4900 feet (MSL). If either source becomes invalid in the auto submode, it will automatically be switched to the other source if valid. In the Baro submode, the SCADC will always be used as the altitude source if valid. In the GPDC mode, the submode that is supplying altitude data to the Navigation subprogram is controlled by line 19 of the NAV PARAMETERS Tableau.

In the GPDC altitude mode, if the last valid source for either submode, goes invalid, the subprogram will display the last valid altitude in line 3 of the NAV PARAMETERS Tableau, and will indicate (V) and INVAL in lines 3 and 20 of the tableau, respectively. The operator can change the last valid altitude that is stored by tableau line modification. The subprogram will enter a Manual status indication on lines 3 and 20 of the tableau, until the next valid altitude data for the submode is received. Barometric altitudes are not modifiable by direct tableau line selection (line 5). However, the operator can change barometric altitudes indirectly by modifying the barometric setting (line 6 NAV PRMTRS Tableau).

CAUTION

- In the GPDC altitude mode, if within a 30-second capture window of a weapon FTP, the current active altitude source fails, the navigation program will use the last selected or computed altitude until the weapon FTP capture occurs or until the aircraft flies out of this 30-second window.

- In the SYSTEM altitude mode, as soon as a weapon FTP becomes recognized as the highest priority FTP, an alert will be provided to SEL GPDC ALT MODE in order to provide the altitude maintainability for weapon FTPs.

4.1.13 System Drift. System drift is displayed as part of the Geo Correct cueing sequencing for informational purposes only.

4.1.14 Position Keeping. The navigation subprogram maintains position keeping for the geographic position, tactical position, and data link position within the GPDC.

4.1.14.1 Initial Position. Prior to GPDC DR initiation, the GPDC navigation subprogram will establish an initial position and will center the aircraft symbol on the TAC PLOT. For the GPDC to receive an initial position from the NIU, the following conditions must be met:

1. CDNU Nav Select Mode established

2. Active Nav Sensor associated with Nav Select Mode has GO status

3. Nav Sensor aligned (if applicable)

If the above conditions are met, the navigation subprogram will set the aircraft initial position to the lat/long position received from the active Nav sensor via the NIU. If the above conditions are not satisfied, the position will be set to the position entered in the

preflight tableau (if applicable), or set to a default lat/log of N 00 00.000 E 000 00.000.

In the latter default position case, the following alert will be provided;

ZZZZ NAV POS UNVL

4.1.14.2 Navigation Commencement. Upon weight off wheels the navigation subprogram will update the initial position as described above as the initial start point. If weight off wheels logic fails to start DR navigation, an ON TOP must be performed. The ON TOP will also attempt to use the initial position from the NAV PARAMERTS Tableau (if entered), otherwise the default position will be used. When the default position is used to commence navigation, an immediate geo-correct to update aircraft current position is required. If an ON TOP does not commence DR navigation, one of the following must occur for a proper start:

1. A valid Nav Select Mode must be established by the CDNU followed by an ON TOP (Reference the CAINS II In-Flight Procedures Guide).

2. A position must be inserted in lines 3 and 4 followed by an ON TOP.

4.1.14.3 Geographic Position. Geographic position is updated 20 times a second. Navigation parameters are resolved and compared with the last geographic position and converted to the current position. The current geographic position is displayed in the NAV PARAMETERS Tableau:

GEO POSN
LAT D XX XX.XXX
LON D XXX XX.XXX

4.1.14.4 Navigation Data Link Position. Data link position is updated five times a second only when the aircraft is a member of the data link net. The data link position is given in grid coordinates that represent the difference in latitude and longitude between the geographic position and the data link reference report. The DLRP can be entered through the LINK PARAMETERS Tableau. The navigation subprogram does not display the current data link grid position to the operator. This information is used in reference to various data link positions displayed on the TAC PLOT. Refer to Chapter 5 for additional information on data link.

4.1.14.5 Navigation System Checks. When the navigation system and the GPDC navigation subprogram are both functioning normally, there are no operator inputs required for DR navigation. However, the operator should maintain systematic surveillance of the entire system to ensure that accurate navigation is being performed. This can be accomplished by comparing the positions displayed in the NAV PARAMETERS Tableau with the independent positions displayed on the CDNU.

4.1.15 GEO NAV Functions. In addition to maintaining the basic navigation parameters discussed earlier, the navigation subprogram also provides the operator with certain aids or functions that enhance the utility and versatility of the TAC PLOT. When GEO NAV mode is selected on the INCOS, GEO NAV functions are displayed on the option select switches, allowing these functions to be available for activation by the operator.

4.1.15.1 A/C TRK (Aircraft Track). When the aircraft track history function is activated, the navigation subprogram provides a series of marks (+) to show the aircraft track across the TAC PLOT. Up to 15 track marks are displayed at operator selected intervals of 1- to 9-minute intervals when in GEO NAV mode.

4.1.15.2 READ L/L (Read Latitude and Longitude). Activation of the read latitude and longitude function displays geographic coordinates or, if the grid coordinate function is active, it displays grid coordinates at any hooked point on the operator display. This function is used to determine the position of items such as surface targets.

4.1.15.3 GRID COORD (Grid Coordinate). When the grid coordinate function is active, grid coordinates are substituted for latitude and longitude position readouts for any position readout, provided none of the grids exceed 999 nm. Otherwise, the position readout will automatically revert to geographic coordinates. The grid coordinates represent the north-south and east-west distance from the grid reference point that has been entered by the operator in the NAV PREFLIGHT Tableau.

GRID
LAT — —— ——.———
LON — ——— ——.———

4.1.15.4 INSERT L/L (Insert Latitude and Longitude). Activation of the insert latitude and longitude function displays a latitude-longitude symbol at the position corresponding to an operator entered latitude and longitude. A latitude-longitude or grid (if grid coordinate function is active) readout is displayed with the symbol. If the position is out of the display area of the TAC PLOT, the latitude-longitude symbol and readout is placed in memory until that geographic position is in the display area. The insert latitude and longitude function is used in operations such as defining the limits of warning or search areas.

4.1.15.5 CV POSN (Aircraft Carrier Position). When the aircraft carrier position function is active, an aircraft carrier symbol is displayed on the TAC PLOT and moves according to the PIM data that has been entered by the operator in the NAV PREFLIGHT Tableau. This function is used for such operations as determining the current CV position and the CV range from a contact. Figure 4-2 shows a typical PIM journey indicating the future course of the aircraft carrier as it has been entered in the NAV PREFLIGHT Tableau.

4.1.15.6 GEO CORR (Geographic Correct). The geographic correct function provides correction of the aircraft's current geographic position in the navigation subprogram. The function is used when a position update is needed. A geographic fix from either CDNU, ON TOP, tacan, or radar source is required as a point of reference to complete the function. A system drift will be computed and displayed.

Note

Long range tacan geographic corrections should be used with caution. Entry of an erroneous station magnetic variation causes serious navigation error.

Upon completion, the geographic position lines of the NAV PARAMETERS Tableau are updated. The aircraft symbol on the TAC PLOT is moved to the corrected position. The computed system drift is not used.

4.1.15.7 MARK TIME. The MARK TIME function enables modification of the operational program time keeping. This function is used during preflight initialization and whenever a time update is required. Only one mark time per computer load is available.

4.1.15.8 GEO NAV Matrix

TACCO
SENSO
COTAC

GEO NAV

PURPOSE:

Displays option select function legends associated with GEO NAV.

PREREQUISITE:

None.

PROCEDURE:

1. Press GEO NAV (lights amber).

Note

GEO NAV at COTAC station does not light amber when pressed. Legend goes black and matrix C TABLE EXTRCT legend appears.

a. GEO NAV option select function legends are displayed in the option select switches.

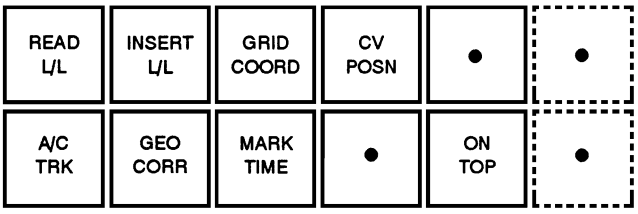

DEACTIVATION:

1. GEO NAV matrix is deactivated when another matrix select switch is pressed.

AIRCRAFT CARRIER PIM JOURNEY

NAV PREFLIGHT TABLEAU (PIM DATA)

PIM			
TIME	13	30	00
LAT	N 33	15	00
LON	W123	10	00

LEG	DIR	SPD	DUR
1	235	015	060
2	265	015	080
3	297	020	120

NOTE

- ONLY CV POSITION SYMBOL, WITH TIME READOUT, IS SHOWN ON TAC PLOT. TRACK OF PIM LEGS IS NOT SHOWN.
- CV POSITION IS UPDATED AT 1-MINUTE INTERVALS
- UPDATED CV POSITION AND MOST RECENT TIME OF COMPUTATION ARE DISPLAYED (IF WITHIN DISPLAY SCALE) AT CREW STATIONS WHERE CV POSITION IS ACTIVE
- CV POSITION SYMBOL WILL REMAIN FIXED AT END OF LAST LEG. TIME READOUT REMAINS FIXED AT LAST COMPUTATION TIME

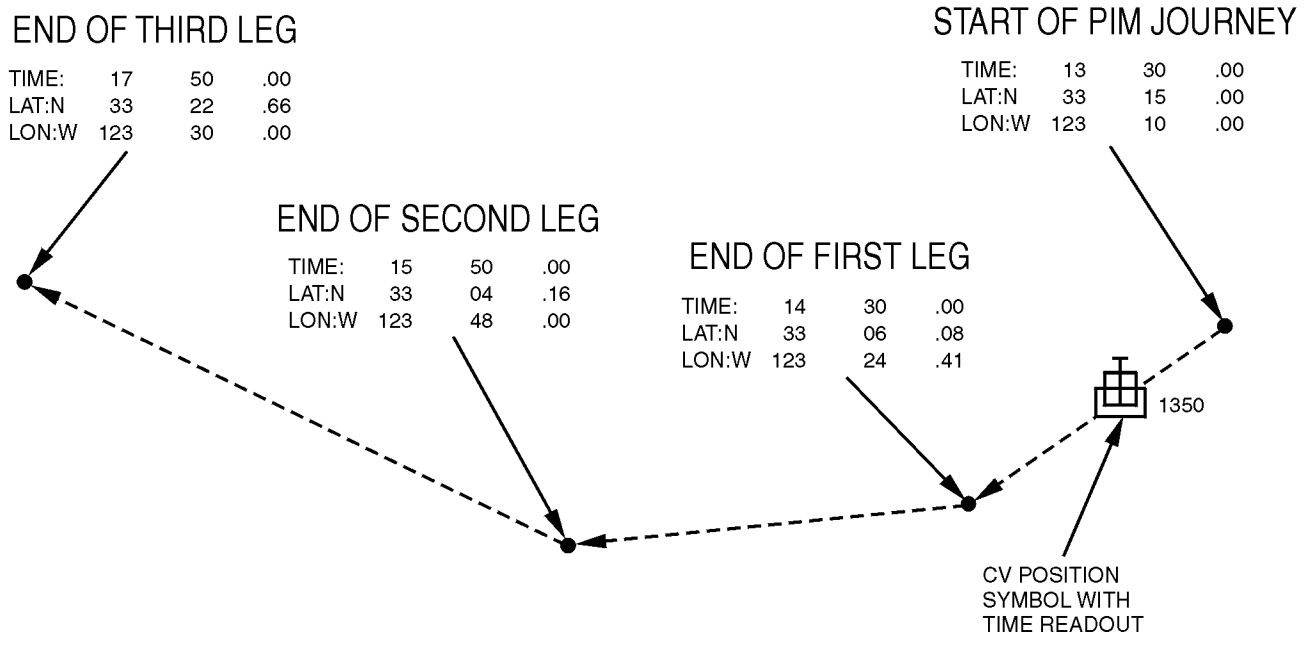

Figure 4-2. Aircraft Carrier PIM Journey

2. Deactivation results:

   a. GEO NAV option select function legends are replaced by option select function legends associated with another matrix select.

   b. GEO NAV matrix switch legend changes from amber to green.

4.1.15.9 READ L/L (Read Latitude and Longitude) Option

TACCO
SENSO
COTAC

GEO NAV

PURPOSE:

Displays geographic coordinates or, if the grid coordinate function is active, it displays grid coordinates at any hooked point on the operator's display. This function is used to determine the position of items such as surface targets and sonobuoys.

PREREQUISITES:

1. GEO NAV matrix is active.
2. If grid coordinate readout is desired:
   a. NAV PREFLIGHT Tableau must have latitude and longitude of grid reference point entered in lines 9 and 10.
   b. GRID COORD function must be active.
3. If geographic latitude/longitude readout is desired:
   a. GRID COORD function must be inactive.
4. Fewer than five latitude/longitude symbols are displayed on the TAC PLOT.
5. Selected position has been hooked.

PROCEDURE:

1. Press READ L/L (momentary).
   a. Latitude/longitude symbol (LL) with associated readout appears on the activating operator's MPD.
      (1) If GRID COORD function is active, readout displays X and Y coordinates of the hooked position in nautical miles, relative to the grid reference point. Neither coordinate may exceed 999 nm.

(TYPICAL) LL N 134 NM
E 027 NM

Note

First line of readout displays LL, and a Y grid readout in nautical miles with a north/south direction indicator. Second line displays X grid readout with an east/west direction indicator. The third line contains a circle that specifies the position of the X and Y grid coordinate readout. When using this readout with other functions, the first L of the latitude/longitude symbol is hookable.

      (2) If GRID COORD function is not active, readout displays geographic latitude and longitude coordinates of the hooked position.

(TYPICAL) LL N 34 24.050
E 153 15.400

Note

First line of readout displays LL, and a latitude readout. Second line displays a longitude readout. The third line contains a circle that specifies the position of the latitude and longitude readout. When using this readout with other functions, the first L of the latitude/longitude symbol is hookable.

4.1.15.10 INSERT L/L (Insert Latitude and Longitude) Option

TACCO
SENSO
COTAC

GEO NAV

PURPOSE:

Displays latitude/longitude or grid coordinates at a position on the MPD corresponding to

operator-entered geographic latitude/longitude or X/Y grid coordinates.

PREREQUISITES:

1. GEO NAV matrix is active.
2. If GRID COORD function is active and grid coordinate display is desired, NAV PREFLIGHT Tableau must have the latitude and longitude of the grid reference point entered in lines 9 and 10.

PROCEDURE:

1. Press INSERT L/L (lights amber).
   a. If GRID COORD function is not active, the following cue appears:

      ENT LATITUDE
      — — — — — . — — —

   b. If GRID COORD function is active, the following cue appears:

      SEL GRID ENTRY
      1 LAT-LONG
      2 X-Y

2. Respond to the cue.
   a. If the SEL GRID ENTRY cue is displayed, proceed to step 3.
   b. If the ENT LATITUDE cue is displayed, proceed to step 5.
3. Respond to the SEL GRID ENTRY cue.
   a. If decision 1 is selected, proceed to step 4.
   b. If decision 2 is selected, proceed to step 9.
4. Press ENTER.
   a. The following cue appears:

      ENT LATITUDE
      — — — — — . — — —

5. Respond to the ENT LATITUDE cue.
6. Press ENTER.
   a. The following cue appears:

      ENT LONGITUDE
      — — — — — — . — — —

7. Respond to the ENT LONGITUDE cue.
   a. If the GRID COORD function is active, proceed to step 13.
   b. If the GRID COORD function is not active, proceed to step 8.
8. Press ENTER.
   a. The MPD TAC PLOT displays LL with geographic coordinates, placed at the position that corresponds to the operator entries.

      (TYPICAL) LL N 34 24.050
      E 153 15.400

Note

The first line of the readout displays the LL, and a latitude readout. The second line displays a longitude readout. The third line contains a circle that specifies the position of the latitude and longitude readout. When using this readout with other functions, the first L of the latitude/longitude symbol is hookable.

   b. INSERT L/L lights green.
9. Press ENTER.
   a. The following cue appears:

      ENT X-NM
      – — — —

10. Enter X grid. First entry is east or west as appropriate. Next three entries are in nm relative to the grid coordinate.
    a. Cue displays entered X grid coordinate.
11. Press ENTER.
    a. The following cue appears:

       ENT Y-NM
       – — — —

12. Enter Y grid. First entry is north or south as appropriate. Next three entries are in nm relative to the grid reference point.

    a. Cue displays entered Y grid coordinate.

13. Press ENTER.

    a. MPD TAC PLOT displays the latitude/longitude symbol with X and Y grid coordinates in nautical miles, placed at the position determined by operator entries with respect to the grid reference point.

(TYPICAL) LL 134 N NM
027 E NM

Note

The first line of the readout displays the LL, and a Y grid readout in nautical miles with a north/south direction indicator. The second line displays X grid readout with an east/west direction indicator. The third line contains a circle that specifies the position of the X and Y grid coordinate. When using this readout with other functions, the first L of the latitude/longitude symbol is hookable.

    b. INSERT L/L lights green.

DEACTIVATION:

1. INSERT L/L is deactivated when one of the following occurs:

    a. Function procedures are completed.

    b. INSERT L/L is pressed when amber.

    c. Another function requires the use of the activating operator's cue area.

2. Deactivation results:

    a. Cues associated with INSERT L/L are removed.

    b. INSERT L/L changes from amber to green.

4.1.15.11 GRID COORD (Grid Coordinates) Option

TACCO
SENSO
COTAC

GRID COORD

GEO NAV

PURPOSE:

Displays X/Y grid coordinates of all latitude/longitude symbols on the MPD.

PREREQUISITES:

1. GEO NAV matrix is active.

2. Grid reference point is entered in the system and displayed on lines 9 and 10 of the NAV PREFLIGHT Tableau.

PROCEDURE:

1. Press GRID COORD (lights amber).

Note

GRID COORD lights amber at all stations where GEO NAV mode is active.

    a. Latitude/longitude symbols on all MPD displays change from geographic coordinate readouts to grid coordinate readouts.

        (1) From:

LL D XX XX.XXX
D XXX XX.XXX

        (2) To:

LL XXX X NM
XXX X NM

Note

- The first line of the grid coordinate readout displays the LL and a Y grid readout in nautical miles with a north/south direction indicator. The second line displays an X grid readout with an east/west direction indicator. The third line contains a circle that specifies the

position of the X and Y grid coordinates. When using this readout with other functions, the first L of the latitude/ longitude symbol is hookable.

- Grid coordinates utilize the grid reference point at the point of origin.
- Grid coordinate readouts cannot exceed 999 nm. Readouts requiring more than 999 nm will be displayed with geographic coordinates.

b. All future latitude/longitude readouts appearing on any MPD will be displayed as grid coordinate readouts.

DEACTIVATION:

1. GRID COORD is deactivated if pressed when amber.
2. Deactivation results:
   a. Grid coordinate readouts on all displays change to geographic coordinate readouts.
   b. GRID COORD changes from amber to green.

4.1.15.12 CV POSN (Aircraft Carrier Position) Option

TACCO
SENSO
COTAC

GEO NAV

PURPOSE:

Displays the CV position on the activating operator TAC PLOT.

PREREQUISITES:

1. GEO NAV matrix is active.
2. PIM data are entered on the following lines of the NAV PREFLIGHT Tableau:
   a. Line 16 — Initial time of CV journey.
   b. Line 17 — Initial latitude of CV position.
   c. Line 18 — Initial longitude of CV position.
   d. Line 20 — Direction, speed, and duration time of first leg of PIM journey.
   e. Line 21 — Direction, speed, and duration time of second leg of PIM journey. Only a prerequisite when CV POSN activation occurs or extends in time the period of the second leg of the PIM journey.
   f. Line 22 — Direction, speed, and duration time of third leg of PIM journey. Only a prerequisite when CV POSN activation occurs or extends in time the period of the third leg of the PIM journey.
3. System is navigating.

PROCEDURE:

1. Press CV POSN (lights amber).
   a. CV position symbol appears on the TAC PLOT.
      (1) Position of symbol indicates the current CV geographic position.
      (2) A four-digit Zulu time readout adjacent to the symbol indicates the time when the computation of the CV position was made.
   b. CV position symbol is updated at 1-minute intervals.
      (1) New CV position and the most recent time of computation is displayed at all stations where CV POSN is active.
2. CV position symbol continues tracking until expiration of all entered PIM legs (lines 20, 21, and 22 of the NAV PREFLIGHT Tableau).
   a. When the duration time of the last PIM leg has been reached, the CV position symbol remains fixed at its last computed position.
      (1) Time readout remains fixed at the last computation time.

DEACTIVATION:

1. CV POSN is deactivated if pressed when amber.

2. Deactivation results:

   a. CV position symbol is removed from the TAC PLOT of the deactivating operator.

   b. CV POSN changes from amber to green at the deactivating operator station.

4.1.15.13 A/C TRK (Aircraft Track) Option

TACCO
SENSO
COTAC

TAC NAV

PURPOSE:

Displays aircraft track history symbols (+) on the MPD, indicating successive geographic or tactical positions of the aircraft at selected intervals.

PREREQUISITE:

1. GEO NAV matrix or TAC NAV matrix is active.

PROCEDURE:

1. Press A/C TRK (lights amber).

   a. The following cue appears:

      ENT INTERVAL-MIN
      —

      (1) If A/C TRK is active at another station, the current repetition rate appears with the cue as a suggested entry.

         ENT INTERVAL-MIN
         X

2. Respond to the ENT INTERVAL cue:

   a. By accepting the suggested entry, if one exists, or

   b. By entering a repetition rate.

3. Press ENTER.

   a. Aircraft history track symbols (+) are displayed on the MPD at the established repetition rate.

      (1) If the aircraft track history function is active at another station, the operator MPD will display all track symbols currently in the system.

Note

- Aircraft track history is displayed on the MPD as a series of track symbols (+) located in positions specified by aircraft past positions, following own aircraft symbol. A maximum of 15 track symbols are displayed. The oldest symbol is deleted as a new symbol appears, maintaining a constant display of 15 symbols.

- The own aircraft symbol indicates the current geographic position of the aircraft. A 1/2-inch vector extending from the center of the circle indicates the direction of the aircraft track.

   b. A/C TRK lights green at other stations if not already active.

DEACTIVATION:

1. A/C TRK is deactivated when one of the following occurs:

   a. A/C TRK is pressed when amber.

   b. Another function requires use of the activating operator cue area when a cue associated with A/C TRK is displayed.

2. Deactivation results:

   a. A/C TRK changes from amber to green.

   b. Cues associated with A/C TRK are removed.

   c. All aircraft track symbols are removed from the affected operator's MPD.

   d. If A/C TRK is not active at another station, the established repetition rate is deactivated.

   e. A/C TRK becomes green at all stations not already active.

4.1.15.14 GEO CORR (Geographic Correct) Option

4.1.15.14.1 CDNU Geographic Correct

TACCO
SENSO
COTAC

GEO CORR

GEO NAV

(CDNU)

PURPOSE:

Allows manual entry of a navigation fix obtained from an update of aircraft geographic positions from the NAV sensor corresponding to the NAV select mode of the CDNU.

PREREQUISITES:

1. GEO NAV matrix is active.

PROCEDURE:

1. Press GEO CORR (lights amber).

Note

GEO CORR lights amber at all stations.

   a. The following cue appears on the activating operator MPD:

```
SEL CORR SOURCE
1 CDNU
2 ON TOP
3 TACAN
4 RADAR
```

2. Press number 1 on the keyset.

3. Press ENTER.

   a. The following cue appears:

```
GEO CORRECT
YYY XX.X
AA.A NM
Z.Z HRS
1 ACC EPT
2 REJECT
```

Note

- YYY is the system drift direction in degrees, positive clockwise from true North.
- XX.X is the system drift speed in knots and tenths of knots.
- AA.A is the magnitude of the geographic correction (in nautical miles) if accepted.
- Z.Z HRS is the elapsed time in hours since the initiation of the last accepted geographic correction.

4. Determine if the geographic correction is to be accepted or rejected.

Note

Decision to accept geographic correction must be made within 60 seconds following the display of the GEO CORRECT cue.

   a. If the geographic correction is accepted, proceed to step 5.

   b. If the geographic correction is rejected, proceed to step 7.

5. To accept the geographic correction, press number 1 on the keyset.

6. Press ENTER.

   a. Aircraft reference position on the MPD is located to reflect the corrected aircraft geographic position.

   b. GEO CORR lights green. Function is completed.

Note

System drift is displayed for information purposes only.

7. To reject the geographic correction, press number 2 on the keyset.

8. Press ENTER.

Note

Failure to respond to the GEO CORRECT cue within 60 seconds causes automatic

rejection of the geographic correction. Results are identical to entering number 2 in responding to the cue decision.

a. Cue is removed from the MPD.

b. GEO CORR lights green. All entries are rejected and the function deactivates.

DEACTIVATION:

1. GEO CORR is deactivated when one of the following occurs:

   a. Function procedures are completed.

   b. GEO CORR is pressed when amber.

   c. Another function requires use of the activating operator cue area when a cue associated with GEO CORR is displayed.

   d. Operator fails to respond to the GEO CORRECT cue within 60 seconds.

2. Deactivation results:

   a. Cues associated with the GEO CORR are removed.

   b. GEO CORR changes from amber to green.

4.1.15.14.2 ON TOP Geographic Correct

TACCO
SENSO
COTAC

GEO CORR

(ON TOP)

GEO NAV

PURPOSE:

Allows manual entry of a navigation fix obtained from an ON TOP system update of aircraft geographic position.

PREREQUISITES:

1. GEO NAV matrix is active.

2. ON TOP performed within 2 minutes prior to GEO CORR initiation.

PROCEDURE:

1. Press GEO CORR (lights amber).

Note

GEO CORR lights amber at all stations.

   a. The following cue appears:

```
SEL CORR SOURCE
1 CDNU
2 ON TOP
3 TACAN
4 RADAR
```

2. Press number 2 on the keyset.

3. Press ENTER.

   a. The following cue appears:

```
ENT LATITUDE
— — — — — . — — —
N/S XX XX XX
```

   b. If the following alert appears:

```
NO ON TOP
```

      (1) An ON TOP has not been performed within 2 minutes before pressing GEO CORR. Function deactivates. GEO CORR lights green.

4. Respond to the ENT LATITUDE cue. Enter the latitude of the ON TOP position obtained from the current chart, or press ENTER accepting the suggested latitude from line 6 of the NAV PREFLIGHT Tableau.

5. Press ENTER.

   a. The following cue appears:

```
ENT LONGITUDE
— — — — — — . — — —
E/W XXX XX XX
```

6. Respond to the ENT LONGITUDE cue. Enter longitude of the ON TOP position, or press ENTER accepting the suggested longitude from line 7 of the NAV PREFLIGHT Tableau.

7. Press ENTER.

a. The following cue appears:

GEO CORRECT
YYY XX.X
AA.A NM
Z.Z HRS
1 ACCEPT
2 REJECT

Note

- YYY is the system drift direction in degrees, positive clockwise from true North.
- XX.X is the system drift speed in knots and tenths of knots.

Note

- AA.A is the magnitude of the geographic correction (in nautical miles) if accepted.
- Z.Z HRS is the elapsed time in hours since the initiation of the last accepted geographic correction.

8. Determine if the geographic correction is to be accepted or rejected.

Note

Decision to accept geographic correction must be made within 60 seconds following the display of the GEO CORRECT cue.

a. If the geographic correction is accepted, proceed to step 9.

b. If the geographic correction is rejected, proceed to step 11.

9. To accept the geographic correction, press number 1 on the keyset.

10. Press ENTER.

a. Aircraft reference position on the MPD is located to reflect the corrected aircraft geographic position.

b. GEO CORR lights green. Function is completed.

11. To reject the geographic correction, press number 2 on the keyset.

12. Press ENTER.

Note

Failure to respond to the GEO CORRECT cue within 60 seconds causes automatic rejection of the geographic correction. Results are identical to entering number 2 in responding to the cue decision.

a. Cue is removed from the MPD.

b. GEO CORR lights green. All entries are rejected and the function deactivates.

DEACTIVATION:

1. GEO CORR is deactivated when one of the following occurs:

a. Function procedures are completed.

b. GEO CORR is pressed when amber.

c. Another function requires use of the activating operator cue area when a cue associated with GEO CORR is displayed.

d. Operator fails to respond to the GEO CORRECT cue within 60 seconds.

2. Deactivation results:

a. Cues associated with the GEO CORR are removed.

b. GEO CORR changes from amber to green.

4.1.15.14.3 TACAN Geographic Correct

TACCO
SENSO
COTAC

(TACAN)

GEO NAV

Note

Long-range tacan geographic corrections should be accepted with care because of tacan fixed inaccuracies due to bearing error

and differences between aircraft and station magnetic variation if station magnetic variation is not known.

PURPOSE:

Allows manual entry of a navigation fix obtained from a tacan station for system update of aircraft geographic position.

PREREQUISITES:

1. GEO NAV matrix is active.
2. Tacan valid range and bearing data are available to the GPDC.

PROCEDURE:

1. Press GEO CORR (lights amber).

Note

GEO CORR lights amber at all stations.

a. The following cue appears:

SEL CORR SOURCE
1 CDNU
2 ON-TOP
3 TACAN
4 RADAR

2. Press number 3 on the keyset.
3. Press ENTER.

a. The following cue appears:

ENT LATITUDE
— — — — — . — — —
N/S XX XX XX

b. if the following alert appears:

DATA UNAVAIL

(1) Tacan bearing or tacan range does not meet GPDCA requirements. Function deactivates. GEO CORR lights green.

4. Respond to the ENT LATITUDE cue. Enter the latitude of the tacan station obtained from the current chart, or press ENTER accepting the suggested latitude from line 6 of the NAV PREFLIGHT Tableau.
5. Press ENTER.

a. The following cue appears:

ENT LONGITUDE
— — — — — — . — — —
E/W XXX XX XX

6. Respond to the ENT LONGITUDE cue. Enter the longitude of the radar position, or press ENTER accepting the suggested longitude from line 7 of the NAV PREFLIGHT Tableau.
7. Press ENTER.

a. The following cue appears:

ENT STA ELEV-FT
— —
OPTNL

b. ENT STA ELEV-FT cue is an optional cue. If the operator chooses to skip the cue, press SKIP CUE and proceed to step 9a.

Note

If the operator chooses to skip the ENT STA ELEV-FT cue, the tacan station elevation is set to zero feet. Station elevations below MSL should be entered as zero feet. Accurate entries are more critical when the aircraft is close to the station. If aircraft is over land and using radar altitude, switch to BARO altitude in MSL and verify NAV parameters altitude readout displays proper MSL altitude prior to activating TACAN GEO correct.

8. Respond to the ENT STA ELEV-FT cue. Enter the elevation of the tacan station.
9. Press ENTER.

a. The following cue appears:

ENT STA MVAR-DEG
— — — —
OPTNL

Note

Avoid skipping the ENT STA MVAR-DEG cue when performing long-range tacan geographic corrections. Differences of magnetic variation between own aircraft and the tacan station could result in navigational errors if the tacan station magnetic variation is not entered by the operator.

b. The ENT STA MVAR-DEG cue is an optional cue. If the operator chooses to skip the cue, press SKIP CUE and proceed to step 10a.

Note

If the cue is skipped, current aircraft magnetic variation is used to compute corrected aircraft position.

c. Respond to the cue by entering the tacan station magnetic variation. Entry range is + (East) or – (West), 0 to 180°.

10. Press ENTER.

a. The following cue appears:

TACAN GEO CORRECT
RRR RAD DDD.D DME
AA.A NM Z.Z HRS
1 ACCEPT
2 REJECT

Note

- RRR is the relative radial position from the aircraft to the tacan station in degrees magnetic.
- DDD.D is the slant range from the aircraft to the tacan station in nautical miles.
- AA.A is the magnitude of the geographic correction (in nautical miles), if accepted.
- Z.Z HRS is the elapsed time in hours since the initiation of the last accepted geographic correction.

11. Determine the validity of the GEO CORRECT cue. See Figure 4-3 for tacan capabilities.

a. Determine the accuracy capability of the bearing component using the following formula:

$$\frac{\text{Distance to TACAN Station}}{30} = \pm \text{ Probable Error in nm due to the Bearing Error}$$

b. Determine if the GEO CORRECT bearing is more closely parallel (indicating a small bearing component) or perpendicular (indicating a significant bearing component) to the bearing from the aircraft to the tacan station.

Note

- Generally, only those geographic corrections that are (1) primarily parallel to the bearing from the aircraft to the tacan station, or (2) primarily perpendicular but greater than the probable error (in nm) because of bearing error, should be accepted.
- The decision to accept the geographic correction must be made within 60 seconds following the display of the GEO CORRECT cue.

c. If the geographic correction is accepted, proceed to step 12.

d. If the geographic correction is rejected, proceed to step 14.

12. To accept the geographic correction, press number 1 on the keyset.

BEARING	*STRONG SIGNAL*	*WEAK SIGNAL*
	± 1/2°	± 2°
DME ± 0.10 nm		

Note

1° at 60 nm = 1 nm arc length

Figure 4-3. TACAN Capabilities

13. Press ENTER.

    a. Aircraft reference position on the MPD is located to reflect the corrected aircraft geographic position.

    b. GEO CORR lights green. Function is completed.

14. To reject the geographic correction, press number 2 on the keyset.

15. Press ENTER.

Note

Failure to respond to the GEO CORRECT cue within 60 seconds causes automatic rejection of the geographic correction. Results are identical to entering number 2 in responding to the cue decision.

    a. Cue is removed from the MPD.

    b. GEO CORR lights green. All entries are rejected and the function deactivates.

DEACTIVATION:

1. GEO CORR is deactivated when one of the following occurs:

    a. Function procedures are completed.

    b. GEO CORR is pressed when amber.

    c. Another function requires use of the activating operator's cue area when a cue associated with GEO CORR is displayed.

    d. Operator fails to respond to the GEO CORRECT cue within 60 seconds.

2. Deactivation results:

    a. Cues associated with GEO CORR are removed.

    b. GEO CORR changes from amber to green.

    c. Operator entered GEO CORR data are rejected if the function is deactivated prior to completion.

4.1.15.14.4 RADAR Geographic Correct

TACCO
SENSO
COTAC

(RADAR)

GEO NAV

PURPOSE:

Allows manual entry of a navigation fix obtained from a radar reference point for system update of aircraft position.

PREREQUISITES:

1. GEO NAV matrix is active.

2. PPI radar display is on the MPD.

3. Hook a radar reference point on the PPI display.

PROCEDURE:

1. Press GEO CORR (lights amber).

Note

GEO CORR lights amber at all stations.

    a. The following cue appears on the activating operator's MPD:

```
SEL CORR SOURCE
1 CDNU
2 ON-TOP
3 TACAN
4 RADAR
```

2. Press number 4 on the keyset.

3. Press ENTER.

    a. The following cue appears:

```
ENT LATITUDE
— — — — — . — — —
N/S XX XX XX
```

4. Respond to the ENT LATITUDE cue. Enter the latitude of the radar position chart, or press ENTER accepting the suggested latitude from line 6 of the NAV PREFLIGHT Tableau.

5. Press ENTER.

a. The following cue appears:

ENT LONGITUDE
— — — — — — . — — —
E/W XXX XX XX

6. Respond to the ENT LONGITUDE cue. Enter the longitude of the radar position, or press ENTER accepting the suggested longitude from line 7 of the NAV PREFLIGHT Tableau.

7. Press ENTER.

a. The following cue appears:

GEO CORRECT
YYY XX.X
AA.A NM
Z.Z HRS
1 ACCEPT
2 REJECT

Note

- YYY is the system drift direction in degrees, positive clockwise from true North.
- XX.X is the system drift speed in knots and tenths of knots.
- AA.A is the magnitude of the geographic correction (in nautical miles), if accepted.
- Z.Z HRS is the elapsed time in hours since the initiation of the last accepted geographic correction.

8. Determine if the geographic correction is to be accepted or rejected.

Note

The decision to accept the geographic correction must be made within 60 seconds following the display of the GEO CORRECT cue.

a. If the geographic correction is accepted, proceed to step 9.

b. If the geographic correction is rejected, proceed to step 11.

9. To accept the geographic correction, press number 1 on the keyset.

10. Press ENTER.

a. Aircraft reference position on the MPD is located to reflect the corrected aircraft geographic position.

b. GEO CORR lights green. Function is completed.

11. To reject the geographic correction, press number 2 on the keyset.

12. Press ENTER.

Note

Failure to respond to the GEO CORRECT cue within 60 seconds causes automatic rejection of the geographic correction. Results are identical to entering number 2 in responding to the cue decision.

a. Cue is removed from the MPD.

b. GEO CORR lights green. All entries are rejected and the function deactivates.

DEACTIVATION:

1. GEO CORR is deactivated when one of the following occurs:

a. Function procedures are completed.

b. GEO CORR is pressed when amber.

c. Another function requires use of the activating operator cue area when a cue associated with the GEO CORR is displayed.

d. Operator fails to respond to the GEO CORRECT cue within 60 seconds.

2. Deactivation results:

a. Cues associated with the GEO CORR are removed.

b. GEO CORR changes from amber to green.

c. Operator entered GEO CORR data are rejected if the function is deactivated prior to completion.

4.1.15.15 MARK TIME Option

4.1.15.15.1 GPS MARK TIME Option

TACCO
SENSO
COTAC

(GPS TIME)

PURPOSE:

Activates or modifies time keeping, using GPS time.

Modifies the valid times in the NAV PREFLIGHT Tableau.

PREREQUISITE:

1. GEO NAV matrix is active.

PROCEDURE:

1. Press MARK TIME (light amber)

   a. The following cue appears at the activating operator:

   SEL TIME SRCE
   1 GPS
   2 MANUAL

2. Press number 1 on the keys.

3. Press enter.

4. Time keeping is activated or modified with GPS time. GPDC and all displays reflect the new time.

5. If NO or CARRY-ON was selected in response to the CLEAR SYSTEM STATUS cue during program loading the cue will be redisplayed upon activation of MARK TIME.

DEACTIVATION:

MARK TIME function deactivates upon completion of the establishment of time reference.

4.1.15.15.2 MANUAL ENTRY MARK TIME Option

TACCO
SENSO
COTAC

(MANUAL ENTRY)

PURPOSE:

Activates or modifies time keeping, using a time entered by the operator in the NAV PREFLIGHT Tableau.

Modifies the valid times in the NAV PREFLIGHT Tableau.

PREREQUISITE:

1. GEO NAV matrix is active.

PROCEDURE:

1. Display the NAV PREFLIGHT Tableau.

2. Press SELECT LINE

   a. The following cue appears:

   ENT LINE NUM
   01

   b. Select line 1.

3. Press ENTER

4. Enter an approaching time (hours, minutes, and seconds) on the keyset.

5. Press ENTER.

   a. Line 1 of the NAV PREFLIGHT Tableau displays the entered time:

   1 TIME XX XX XX

6. When the associated time signal reaches coincidence with the entered time, press MARK TIME (momentary).

4.1.15.16 ON TOP Option

TACCO
SENSO
COTAC

GEO NAV

PURPOSE:

Places the ON TOP symbol on the TAC PLOT.

Retains the current aircraft parameters for use by other functions.

Activates DR navigation.

PREREQUISITE:

1. GEO NAV matrix is active.

PROCEDURE:

1. To retain current aircraft parameters for use by other functions when DR processing is initialized, press ON TOP (momentary).
   a. Current time, altitude, and aircraft geographic position are retained in memory and are data extracted.
   b. Previous ON TOP symbol is cleared from all TAC PLOTS.
   c. ON TOP symbol is displayed at the current aircraft position on all TAC PLOTS.
   d. GEO CORR function is available for 2 minutes if ON TOP is used as the correction source.
2. To initiate DR processing when the INS is disabled:
   a. Enter initial position latitude and longitude on lines 3 and 4 of the NAV PREFLIGHT Tableau.
   b. Press ON TOP.
   c. DR navigation processing is initiated.
3. To activate DR navigation after an airborne reload with the INS not disabled:
   a. Press ON TOP.
   b. DR navigation processing is initiated at the current INS position.
   c. Lines 3 and 4 of the NAV PREFLIGHT Tableau are updated to the current INS position.

4.2 TAC NAV MATRIX FUNCTIONS

4.2.1 Insert SONB (Insert Sonobuoy). This function is used to insert a sonobuoy in the TAC PLOT without dropping one from the aircraft.

4.2.2 A/C TRK (Aircraft Track). Aircraft track history is identical to A/C TRK in the GEO NAV mode.

4.2.3 Enter FTP (Enter Fly-to-Point). The ENTER FTP function enters either a monitor or a normal FTP onto the TAC PLOT. Monitor FTPs remain displayed after capture and are used to repeatedly fly over the same area. Normal FTPs may have specific approach tracks designated when the operator desires a specific approach direction and are removed upon capture.

Note

This function is located in the COTAC TAC NAV and SCH MODE matrices. The TACCO/SENSO ENTER FTP function is located in their display control switch group.

4.2.4 TAC NAV Matrix

TACCO
SENSO
COTAC

TAC NAV

PURPOSE:

Displays option select function legends associated with the TAC NAV matrix.

PREREQUISITE:

None.

PROCEDURE:

1. Press TAC NAV (lights amber).

Note

TAC NAV at COTAC station does not light amber when pressed. The legend goes black and the matrix C DPOSIT SYMBOL legend appears.

a. TAC NAV option select function legends are displayed in the option select switches.

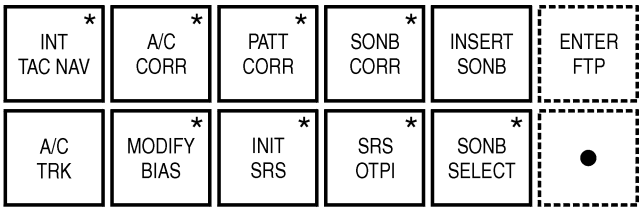

* BLACKLIT AND UNAVAILABLE

DEACTIVATION:

1. TAC NAV matrix is deactivated when another matrix select switch is pressed.

2. Deactivation results:

   a. TAC NAV option select function legends are replaced by option select function legends associated with another matrix select.

   b. TAC NAV matrix switch legend changes from amber to green.

4.2.4.1 INSERT SONB (Insert Sonobuoy) Option

TACCO
SENSO
COTAC

TAC NAV

PURPOSE:

Inserts a new (not Link 11) sonobuoy into the system at a hooked or ON TOP position, or transfers a remote (Link 11) sonobuoy to local stores.

PREREQUISITE:

1. TAC NAV matrix is active.

2. Display is in the TAC PLOT, ESM, or S/C RADAR PPI modes.

3. System sonobuoy capacity has not been reached.

PROCEDURE:

1. Determine type of insertion:

   a. To insert a new sonobuoy at an ON TOP position, ON TOP must be performed within 60 seconds prior to initiation of the INSERT SONB function. Proceed to step 3.

   b. To insert a new sonobuoy at a hooked position, the tactical position of the new sonobuoy must be indicated on the TAC PLOT. Proceed to step 2.

   c. To transfer a remote sonobuoy symbol to local stores (BUOY IN WATER Tableau), proceed to step 13.

2. Hook a position indicating the location of the new sonobuoy.

Note

If an ON TOP has been performed within the last 60 seconds, all newly inserted sonobuoys will be positioned at the OT position even if another position has been hooked, or if the OT has been destroyed.

3. Press INSERT SONB (lights amber).

   a. The following cue appears:

   ENT SONB TYPE
   — —

4. Enter buoy type on the keyset:

   a. Cue requires valid SSQ number entries.

SSQ NUMBER	FUNCTION TYPE
41	LOFAR
53	DIFAR
62	DICASS
77	VLAD

or,

enter numeric of smoke type: 25 or 58.

5. Press ENTER

   a. Upon entry of the sonobuoy type if a DIFAR or VLAD was selected, one of the following appropriate cues is displayed:

```
 SEL DIFAR
1 53B
2 53D
```

```
 SEL VLAD
1 77A
2 77B
```

   Press numeric on the keyset for desired sonobuoy.

   If a VLAD 77B was selected then the following cue is displayed:

```
 SEL BB OR CZ
1 BB
2 CZ
```

   Press numeric on the keyset for desired sonobuoy.

   b. If 62 is selected, the following cue appears:

```
 SEL DICASS
1 62B
2 62C – DEEP
3 62C – EXTENDED
```

   Press numerics on the keyset for desired sonobuoy.

   c. If other than 62, 53, or 77 is selected, proceed to step 6a.

   d. If a SMOKE (25 or 58) was selected, proceed to step 12a.

6. Press ENTER.

   a. If no alert appears, the following cue appears:

```
ENT RF
— —
```

7. Enter RF of the new sonobuoy on the keyset.

8. Press ENTER.

   a. If the following alert appears:

```
DUPLICATE RF
```

      (1) A sonobuoy of the same RF is already in the system.

      (2) Alert is for operator information only.

   b. One of the following depth cues will be displayed depending on buoy selection:

      (1) For the LOFAR buoy:

```
   SEL DEPTH
1 SHALLOW – 60FT
2 MEDIUM – 300 FT
3 DEEP – 1000 FT
```

      (2) For the DIFAR 53B or 53D buoy:

```
   SEL DEPTH
1 SHALLOW – 90FT
2 MEDIUM – 400 FT
3 DEEP – 1000 FT
```

      (3) For the VLAD 77B buoy:

```
 SEL DEPTH
1 MEDIUM – 500 FT
2 DEEP – 1000 FT
```

      (4) For the DICAS 62B or C buoy:

```
 SEL DEPTH
1 SHALLOW – 90FT
2 MEDIUM – 400 FT
3 DEEP – 1500 FT
```

      (5) For the DICASS 62C with extended depth:

```
 SEL DEPTH
1 SHALLOW – 90FT
2 MEDIUM – 400 FT
3 DEEP – 2500 FT
```

9. Press numeric on the keyset for desired depth.

10. Press ENTER.

   a. The following cue appears:

```
ENT TIME LEFT–HRS
— —
                OPTNL
```

b. ENT TIME LEFT-HRS cue is an optional cue. If the operator chooses to skip the cue, press SKIP cue.

(1) The remaining life of the inserted sonobuoy is set to the maximum life for the sonobuoy type entered.

(2) Cue is removed from the MPD.

(3) Proceed to step 12a.

c. If the operator chooses to enter the remaining life of the buoy, proceed to step 11.

11. Enter the remaining life of the buoy on the keyset.

12. Press ENTER.

a. Inserted sonobuoy or SMOKE is displayed on the TAC PLOT as a local buoy at the ON TOP or hooked position.

b. INSET SONB lights green.

13. To transfer a remote sonobuoy symbol to local stores:

a. Hook the desired remote sonobuoy symbol.

14. Press INSERT SONB (momentary action).

a. The appropriate local sonobuoy symbol is displayed on the TAC PLOT over the remote sonobuoy symbol.

b. INSERT SONB lights green.

DEACTIVATION:

1. INSERT SONB is deactivated when one of the following occurs:

a. Function procedures are completed.

b. INSERT SONB is pressed when amber.

c. Another function requires use of the activating operator cue area when a cue associated with INSERT SONB is displayed.

2. Deactivation results:

a. Cues associated with INSERT SONB are removed.

b. INSERT SONB changes from amber to green.

4.2.4.2 A/C TRK (Aircraft Track) Option

TACCO
SENSO
COTAC

TAC NAV

PURPOSE:

Displays aircraft track history symbols (+) on the MPD, indicating successive geographic positions of the aircraft at selected intervals.

PREREQUISITE:

1. GEO NAV or TAC NAV matrix is active.

PROCEDURE:

1. Press A/C TRK (lights amber).

a. The following cue appears:

ENT INTERVAL-MIN
—

(1) If A/C TRK is active at another station, the current repetition rate appears with the cue as a suggested entry.

ENT INTERVAL-MIN
X

2. Respond to the ENT INTERVAL cue:

a. By accepting the suggested entry, if one exists, or

b. By entering a repetition rate.

3. Press ENTER.

a. Aircraft history track symbols (+) are displayed on the MPD at the established repetition rate.

(1) If the aircraft track history function is active at another station, the operator MPD will display all track symbols currently in the system.

Note

- Aircraft track history is displayed on the MPD as a series of track symbols (+) located in positions specified by aircraft past positions, following own aircraft symbol. A maximum of 15 track symbols are displayed. The oldest symbol is deleted as a new symbol appears, maintaining a constant display of 15 symbols.

- The own aircraft symbol indicates the current geographic or tactical position of the aircraft. A 1/2-inch vector extending from the center of the circle indicates the direction of the aircraft track.

b. A/C TRK lights green at other stations if not already active.

DEACTIVATION:

1. A/C TRK is deactivated when one of the following occurs:

   a. A/C TRK is pressed when amber.

   b. Another function requires use of the activating operator cue area when a cue associated with A/C TRK is displayed.

2. Deactivation results:

   a. A/C TRK changes from amber to green.

   b. Cues associated with A/C TRK are removed.

   c. All aircraft track symbols are removed from the affected operator's MPD.

   d. If A/C TRK is not active at another station, the established repetition rate is deactivated.

   e. A/C TRK becomes green at all stations not already active.

4.3 STEERING

The steering subprogram assists the pilot by determining the desired ground track guidance data necessary in directing the aircraft to maintain an orbit or to fly to an operator-designated point. Although the steering subprogram has no direct operator control, it does provide guidance data to the autopilot for automatic control of the aircraft (only available for aircraft incorporating AFC-273) and to the pilot and COTAC HSI for manual control of the aircraft.

WARNING

The steering subprogram does not consider the potentially hazardous aspects of maneuvering the aircraft at low airspeeds and/or altitudes. FTPs inserted at positions requiring large heading changes cause the subprogram to generate bank angles capable of causing significant airspeed or altitude loss unless immediately compensated for by the pilot. Aircrews must be constantly alert for these situations. Crew coordination in the use of FTPs is an absolute necessity.

Note

Roll APS not available with AFC-244 incorporated (Aircraft not incorporating AFC-273).

4.3.1 Steering Description. Steering assists the operator by providing the following functions:

1. FTP
2. Gate
3. Great circle steering
4. Point-to-point steering
5. Point-to-point undesignated steering
6. Point-to-point designated steering
7. Orbital capture.

4.3.1.1 Fly-to-Point. A FTP is an operator-selected position recognizable by the steering subprogram for steering commands. Figures 4-4 and 4-5 describe the type, characteristics, and uses of FTPs.

The operator can have a maximum of 11 FTPs active in the system at the same time: one weapon FTP and 10 others made up of any combination of the remaining types. Because numerous FTPs can be active at the same time, a system of priorities determines the order in which the aircraft captures the various categories of FTPs. Because numerous FTPs of the same type can be active at the same time, a system of subpriorities determines the order in which the aircraft captures them. As FTPs are added to or deleted from the system, FTP subpriorities for each type are appropriately adjusted and displayed with the FTP symbol. (However, the priority of the FTP types is not displayed to the operator.) When FTPs of the same type are active at the same time, subpriority is based on order of entry, with the oldest having the highest priority.

FTP	PRIORITY	SYSTEM CAPACITY
Weapon	1	1
Expendable	2	6
Intercept	3	1
Orbital, Datum	4	1
Orbital,Tangential	4	1
Normal	5	10
Monitor	6	10

Figure 4-4. FTP Characteristics

Note

Only the two highest priority FTPs are presented on the pilot display.

4.3.1.2 Gate. A gate is a radius around a FTP utilized in determining if the aircraft has arrived at the FTP (margin for error). Aircraft arrival occurs when the aircraft is at its CPA to the FTP and is within the gate. If the aircraft has been designated a specific arrival track, it must also be within 10° of that track angle. Heading criteria is ignored for second and subsequent weapon FTPs in a train. Aircraft arrival within track and gate limits is termed FTP capture (see Figure 4-6).

Capture characteristics for each type FTP are listed in Figure 4-7.

4.3.1.3 Great Circle Steering. Great circle steering computes the ground track and furnishes the guidance data necessary for directing the aircraft to normal FTPs when the distance to go is 32 miles or greater. Great circle steering is advantageous for longer distances because on a sphere, a great circle line is the shortest distance between two points. A disadvantage to great circle steering is that when used with a plot employing parallel latitude and longitude lines (as with the S-3B plot), the course changes direction with every change in longitude. On routine long distance flights, the additional computer processing needed for the constant course change presents no overload problem and is justified by the saving of time and distance traversed. However, for shorter distances, less than 32 miles, the steering subprogram does not utilize great circle steering.

FTP	USE
Weapon	Used in steering to a weapon release point and releasing weapon(s) upon FTP capture. (Except for Harpoon missiles.)
Expendable	Used in steering to a search (expendable) store release point and releasing search store(s) upon FTP capture.
Intercept	Used in steering to intercept a target.
Orbital, Datum	Used in steering to a point, and then onto the circumference of a circle established about that point. This function is useful for holding.
Orbital, Tangential	Used in steering onto a circle established about a point. This function is useful for holding.
Normal	Used in steering to a point usually representing a routine navigation point.
Monitor	Used in steering to a point which may be returned to repeatedly.

Figure 4-5. FTP Usage

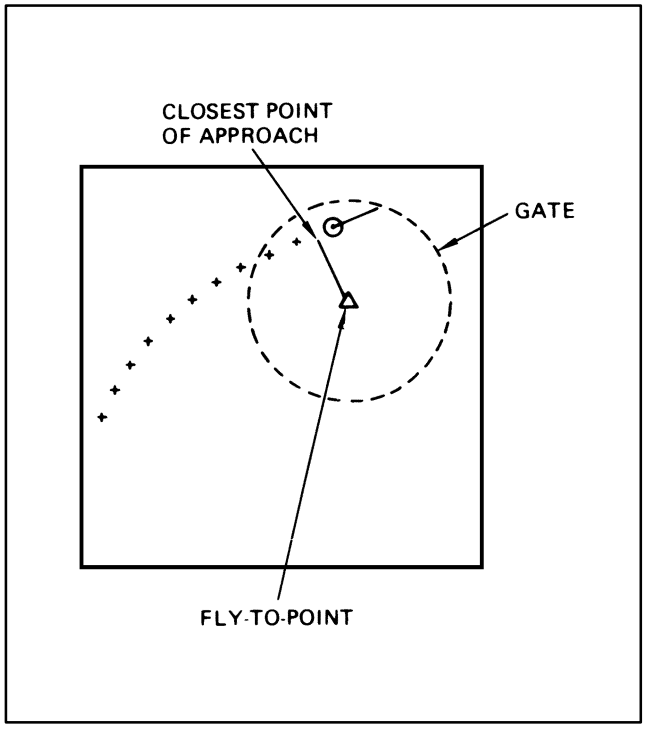

Figure 4-6. FTP Capture

4.3.1.4 Point-to-Point Steering. Point-to-point (or rhumb line) steering computes the ground track and furnishes the guidance data necessary for directing the aircraft to normal FTPs when the distance to go is less than 32 miles. Point-to-point steering is also used in directing the aircraft to weapon, expendable, monitor, orbital, datum, and intercept FTPs regardless of the distance to go. A point-to-point line is cumulatively longer than a great circle line and therefore less desirable for routine long distance flights. However, when used with a plot employing parallel latitude and longitude, point-to-point steering does not change course with every change in longitude. For shorter distances, less than 32 miles, the steering subprogram utilizes point-to-point steering.

4.3.1.5 Point-to-Point Designated Steering. Point-to-point designated steering (used by weapon, and designated normal and expendable) determines the ground track and furnishes the guidance data necessary to bring the aircraft to a FTP on a designated track. To accomplish this the steering subprogram computes a path from the aircraft present position to the FTP utilizing first two arc segments, each followed by a radial. The first arc segment orients the aircraft onto a radial toward the final arc. This final arc orients the aircraft onto the designated bearing for intercepting the FTP position (Figure 4-8). The flightpath is recomputed continuously based upon the latest aircraft and FTP information, thus, any changes in flight geometry are immediately identified and corrected.

Note

- Roll command inputs for the initial arc are those required for a standard-rate turn, up to a maximum of 45° angle of bank.

- Roll command inputs for the final arc are those required to fly the circle up to a maximum of a standard-rate turn or 45° angle of bank.

The aircraft will exit the final turn circle 20 seconds prior to FTP capture (20-second gate designated by a football symbol).

Designated FTP capture requires the aircraft to be within 10° of the designated track at the closest point of approach to the FTP. FTP capture is summarized in Figure 4-7.

4.3.1.6 Orbital Capture. Orbital capture determines the ground track and furnishes the guidance data necessary for directing the aircraft to maintain a counterclockwise orbit about a point. Initial capture may be datum or tangential.

The program suggests a radius 1-1/4 times the radius of a standard rate turn for airspeeds of 200 knots or more, and 1,700 yards for slower speeds. The maximum radius size an operator can enter is 65,535 yards. The minimum radius is limited by the minimum turn radius of the aircraft at any given speed.

Orbital capture assists the pilot and COTAC in maintaining the desired orbit radius by displaying the maximum true airspeed at which the orbit can be maintained. This is accomplished via the alert:

MAX TAS XXX KTS

The alert is displayed when current TAS is too great to maintain the desired orbit radius. It is removed when the aircraft is flown at the appropriate TAS, or when the TAS becomes less than 200 knots.

FTP	GATE RADIUS	UPON CAPTURE
Weapon	100 yards	Selected weapon(s) is released and the weapon FTP is deleted from the system. (Except for Harpoon missiles.)
Expendable	200 yards if aircraft altitude at gate arrival is less than 2,000 feet; 500 yards if aircraft altitude at gate arrival is greater than 2,000 feet	Select store(s) is launched and the expendable FTP is deleted from the system.
Intercept	2,000 yards	Aircraft remains on track at the time of capture for 21 seconds, then returns to FTP. The return to FTP continues, forming a clover-leaf pattern, until a higher priority FTP is entered or the intercept FTP function is deactivated.
Orbital, Datum	500 yards at datum; 2,000 yards on orbital capture	Aircraft enters an operator-designated counterclockwise orbit about the datum. It continues to orbit until a higher priority FTP is entered or the orbit function is deactivated.
Orbital, Tangential	2,000 yards	Aircraft remains on an operator-designated counterclockwise orbit. It continues to orbit until a higher priority FTP is entered or the orbit function is deactivated.
Normal	500 yards	FTP is deleted from the system.
Monitor	2,000 yards	If a single monitor FTP is in the system, procedure is identical to intercept FTP. If more than one monitor FTP is in the system, the captured FTP remains, but assumes the lowest monitor FTP subpriority. All other entered monitor FTP subpriorities are updated by one.

Figure 4-7. FTP Capture Characteristics

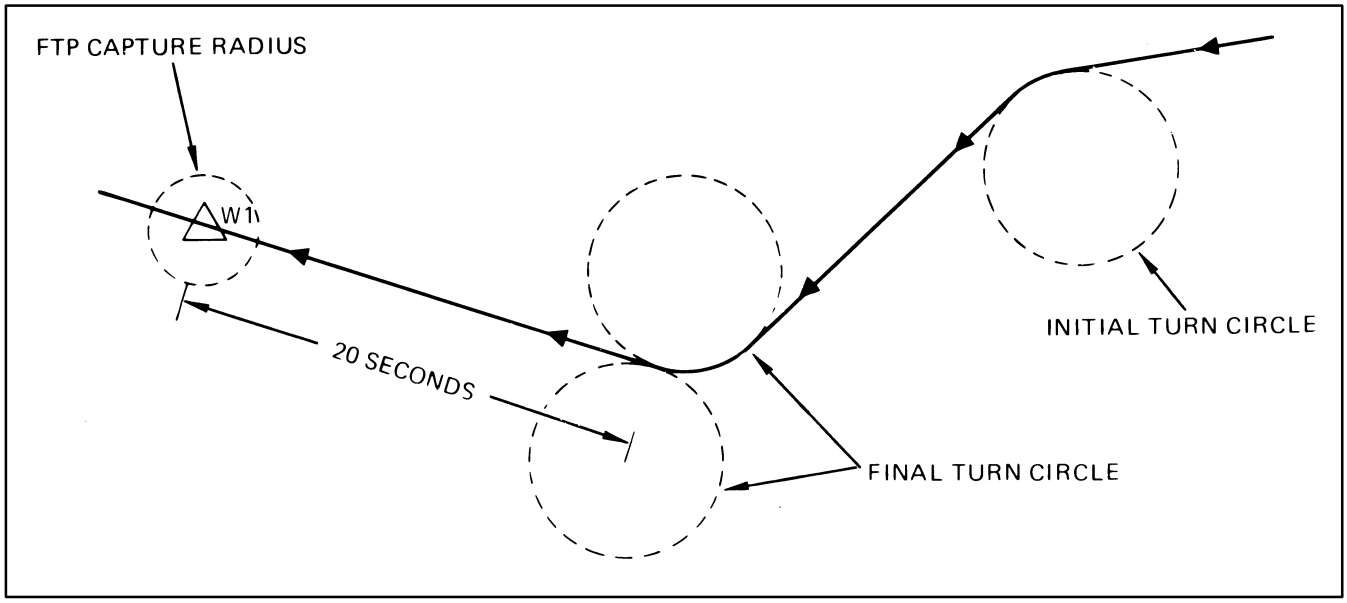

Figure 4-8. Designated FTP Capture

WEAPON	DROP	TARGET	RELEASE POINT
Mine	Single	Stationary	Direct to Release Point
Mine	Multiple	Stationary	Operator Designated
Torpedo	Single	Stationary[1]	Direct to Release Point
Torpedo	Single	Moving[2]	Up Target Track
Harpoon	Single or Multiple	Moving[2]	Operator Designated
Harpoon	Single or Multiple	Stationary[1]	Operator Designated

[1]A Fix Position hooked.
[2]A Gen Track hooked.

Figure 4-9. Weapon FTP Track Designations

4.3.1.7 FTP Utilization and Computer Implementation

4.3.1.7.1 Weapon FTP. As the name implies, the weapon FTP is used when deploying non-forward-firing kill stores. The weapon FTP is the highest priority FTP and a weapon must be selected for use before the weapon FTP becomes available for selection. The weapon FTP is a FTP designated by the computer and is the most difficult FTP to capture in the manual steering mode because of its implementation. The ballistics subprogram continually updates the release point to account for changes in wind, groundspeed, and altitude. To capture weapon FTPs consistently, use computer coupled steering. At weapon FTP capture, the FTP disappears from the display and a splash point symbol appears. Figure 4-9 lists track designations for specific weapons.

CAUTION

When within 30 seconds of weapon FTP capture, and the active altitude source becomes invalid, the last valid altitude is maintained until WFTP capture. If a valid altitude source becomes available, inside the 30-second gate, the altitude is updated after WFTP capture.

Note

- The ballistics subprogram calculates splash time and splash points for all weapons serviced by ballistics, regardless of altitude, and displays the splash points at their appropriate water-entry position on the tactical display.
- The Harpoon weapon FTP is utilized for steering purposes only. Because the GPDC places the Harpoon weapon FTP 550 yards inside the Harpoon minimum release envelope, the missile will not release upon FTP capture.

4.3.1.7.2 Expendable FTP. The expendable FTP may be either designated or an undesignated FTP used when deploying search stores or a SUS on-line with the computer or through the INCOS. The ballistics subprogram is used to calculate accurate splash points when the aircraft is at an altitude of less than 2,000 feet. The expendable FTP disappears from the display upon FTP capture and the appropriate search store symbol appears at the calculated splash point.

Note

The ballistics subprogram calculates splash time and splash points for all expendable stores serviced by ballistics, and displays the splash points at their appropriate water-entry position on the tactical display. This assist is available only for on-line mode released stores, released below 2,000 feet. For release above 2,000 feet, ballistics sets the splash point equal to the release point. Ballistics does not compute for drops above 2,000 feet because varying wind velocities from the drop altitude to the surface are not available as input parameters.

4.3.1.7.3 Intercept FTP. The intercept FTP always uses point-to-point undesignated steering commands to fly the aircraft to the FTP. Intercept FTPs may be selected anytime a GEN TRACK or CONTIN PRED is in use. The intercept FTP is a momentary capture FTP and steering commands are continually generated to reintercept the target in question until the intercept FTP is deselected on the INCOS. The aircraft will continue outbound for 21 seconds after intercept FTP capture occurs before turning to capture the newly computed FTP.

4.3.1.7.4 Orbital FTP. There are two types of orbital FTPs, the difference being the location of the capture point. The datum capture FTP uses the center of the orbit circle as the capture point and the aircraft is then flown into a counterclockwise orbit. The tangential capture FTP picks an entry point on the radius of the orbit circle and the aircraft is flown into the orbit at a tangent to that point and capture occurs. The orbit FTPs are flown in a counterclockwise orbit until the FTP is deselected. The radius of the orbital FTP is selected by the operator.

4.3.1.7.5 Normal FTP. The normal FTP is used primarily as a point-to-point navigation tool. The normal FTP may be either designated or undesignated at the option of the operator and disappears from the display at capture.

4.3.1.7.6 Monitor FTP. The monitor FTP is a useful tool to ease the workload of the pilot while monitoring a designated surveillance area. The monitor FTP is not removed from the system data base upon capture. If more than one monitor FTP is in the system data base at any specified time, at capture the captured FTP becomes the lowest priority monitor and the other monitor FTPs are advanced in priority by one increment. Should there only be one monitor FTP within the system data base, the aircraft captures the FTP, then proceeds outbound for 21 seconds before generating steering commands to return to the FTP. The monitor FTP is removed from the display using DSTRY DATA or CLR PT DATA options.

4.3.1.8 Steering Command Indicators. The pilot receives steering commands from the GPDC via the HSI. The pilot may fly the aircraft or elect to allow the AFCS to follow steering commands, enabling hands off capture of FTPs. In either case, the presentation on the HSI is identical.

The GPDC computes a track to the highest priority FTP when CMPTR is selected with the NAV SEL switch on the flight mode selector panel. The FTP time to go, distance to go and estimated time of arrival peripheral readouts on all displays, and steering commands on the HSI, are unavailable for display until CMPTR is selected.

Note

Deselection and reselection of CMPTR forces the GPDC to recompute a track from the aircraft present position to the FTP.

Commanded course is provided by the course command arrow and the course window. Deviation from the computed track is provided by the course deviation indicator. Each dot represents 1,000 yards. The No. 1 needle points to the FTP and the distance window indicates distance to go, if the DIST/SPD and BRG NO. 1 switches on the navigation display selector panel are set to NAV.

4.3.1.9 Manual Steering. When CMPTR is first selected with the NAV SEL switch on the flight mode selector panel, the track is computed and the course deviation indicator is centered. The course command arrow and the course window readout begin to change to indicate the commanded aircraft course. The pilot adjusts his angle of bank to maintain the track indicated by the course command arrow and course window. This is done by matching the No. 2 needle (which indicates actual ground track) with the head of the course command arrow. From this point the track is flown on the HSI much like a tacan final approach course, except that the GPDC, not the pilot, is selecting the course to be flown. The No. 1 needle points to the FTP; it does not provide any steering information. Following the No. 1 needle to a designated FTP may result in an unsuccessful capture because of failure to meet the ±10° course gate.

Note

A block diagram of the automatic guidance system is shown in Figure 4-10.

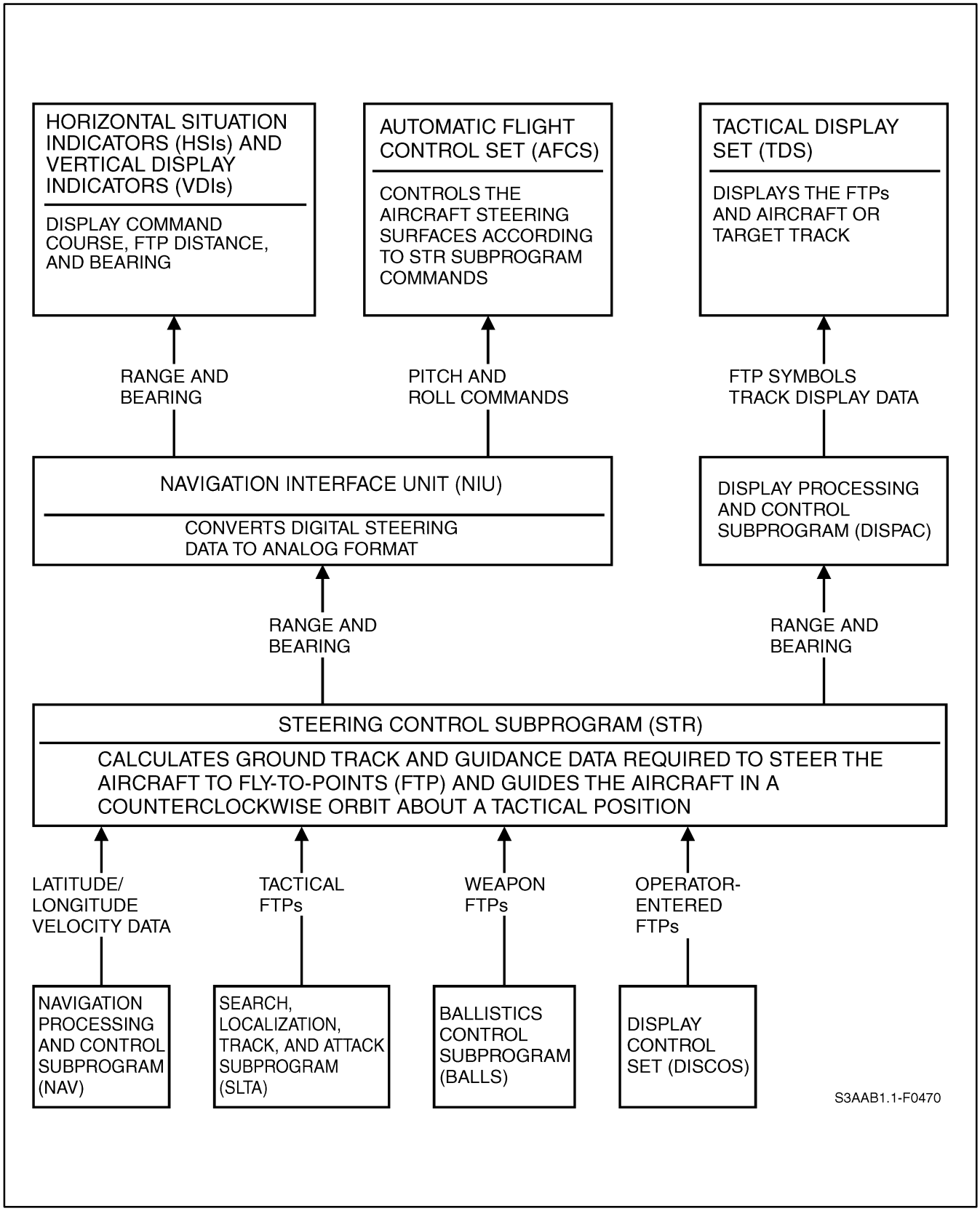

Figure 4-10. Automatic Guidance Block Diagram

PART IV

Data Link

Chapter 5 — Data Link System

CHAPTER 5

Data Link System

5.1 DATA LINK SYSTEM, MODEL IV

5.1.1 Introduction. The S-3 Data Link System is a communication link that provides computer-to-computer exchange of tactical data between the aircraft and other PUs. Tactical data are accumulated by the operational program and selected data are encoded in Link 11 format. It is then transmitted to the other PUs and receiving units (RUs) that make up the data net. Data received from other PUs within the data net are decoded and converted to a format acceptable to the computer program. The Data Link System includes provisions for an aircraft being relieved from on-station to exchange information with the relieving aircraft.

The S-3 uses the following equipment for data link operations:

1. GPDC (General Purpose Digital Computer)
2. CC (Communications Controller-AFC-224)
3. DTS (Data Terminal Set)
4. KG-40A (Secure Data Keyer)
5. RSCI (Radio Set Control Indicator).

The GPDC, with its communications processing and control subprogram (COMPACS), formats the digital data words. The DTS modulates and demodulates the words and establishes Link 11 timing and control. The CC acts as a digital interface between the GPDC and the DTS, and an audio interface between the DTS and radio.

Tactical data exchange employs formatted message information to all units in the tactical data net. Link 11 compatibility depends upon message implementation, rather than the computer used.

5.1.2 System Components. The Link 11 system consists of equipment listed in Figure 5-1.

5.1.2.1 Communications Controller. The CC performs all required switching of communications command control and information signals and routes them to the proper equipment.

5.1.2.2 Data Terminal Set. The DTS enables two-way computer-to-computer exchange of information between own S-3 and other PUs as follows:

1. Accepts audio tones from the UHF-1, -2, or HF receiver and converts them into a serial stream of data in Link 11 format (messages).
2. Transfers the received messages into the GPDC memory for storage.
3. Accepts messages from the GPDC.
4. Converts the computer messages into audio tones and transfers the tones to a communication transmitter for transmission.

An intermittent or solid DTS fault when signal conditions are poor may be an invalid fault indication. This condition may be because of a DTS/KG-40A interface problem. The occurrence of a continuous DTS fault, with an accompanying degradation of data link performance, may be corrected by cycling NET ACTIVE. The resulting COMM DEF alert should be cleared but COMM should not be reinitialized.

5.1.2.3 Radio Set Control Indicator. The RSCI enables the operator to change the frequencies and/or operational modes of the radio systems. Control of the communications through the use of the RSCIs is primarily assigned to the COTAC with backup provided by the TACCO. The operator is provided displays to inform him of the operational status of the communications subsystems. The RSCI interfaces only with the CC.

TYPE DESIGNATOR	NOMENCLATURE	COMMON TERMINOLOGY	LOCATION
CV-3048A/A1	Converter-Interconnecting Box	Communications Controller	Right aft external bay
CV-2830/AYC	Digital-to-Analog Converter	Data Terminal Set	Right aft external bay
C11434/A1	Radio Set Control Indicator	Radio Set Control Indicator	Flight Station Center console; TACCO station, front panel
KGX-40/TSEC	Secure Data Keyer Control	Data Keyer Control Unit	COTAC side console
TSEC/KG-40A	Key Generator (Data)	Secure Data Keyer	Right internal bay
RT-1016/ARC-153	Radio Receiver-Transmitter	Receiver-Exciter	Right aft external bay
AM-6384/ARC-153	Radio Frequency Amplifier	Power Amplifier	Right aft external bay
CU-1985/ARC-153	Antenna Coupler	Antenna Coupler	Vertical stabilizer
None	Antenna	Antenna	Vertical stabilizer
RT-1571A/ARC-187	Radio Receiver-Transmitters	Receiver Transmitters	Right aft external bay
SA-1817/A	RF Transmission Line Switches (Nos. 1 and 2)	RF Transmission Line Switches (UHF)	ECS compartment
SA-1986/A	RF Transmission Line Switches (Nos. 3 and 4)	RF Transmission Line Switches (UHF)	ECS compartment
AS-2628/A	Antenna Assemblies	UHF/L-Band Blade Antennas	External fuselage surface (top forward, top aft, and bottom aft)
AS-3557/A	Antenna Assembly	VHF/UHF	Top FWD

Figure 5-1. Link 11 System Components

5.1.2.4 KG-40A Secure Data Keyer. The KG-40A encrypts serial data transmitted from the CC (originating in the GPDC) and sends this encrypted data to the data terminal set. During reception, serial data are transferred from the data terminal set to the KG-40A where it is decrypted, sent to the CC and then on to the GPDC. Manual setup of the KGX-40 control unit by the COTAC is required before transferring data. Details are in the data link setup procedure.

The KG-40A may hang up and prevent reception or transmission of data. Symptoms, as a picket, are intermittent or continuous DTS faults on the RSCI when transmitting and no data update during the reception portion. To clear this condition, cycle the KGX-40 control unit FUNCTION switch to the ALM CHK position and then back to OPERATE. Several cycles of the FUNCTION switch may be required. If this does not clear the hangup, deactivate NET ACTIVE and cycle the KGX-40 FUNCTION switch through all its positions. Reactivate NET ACTIVE.

As NCS, the symptom of KG-40A hangup is transmission of a continuous DTS preamble. To clear this condition, deactivate NET ACTIVE, cycle the

KGX-40 FUNCTION switch through all its positions. Reactivate NET ACTIVE.

5.1.2.5 System Interface. Primary system control is through the RSCI except for the DTS which is controlled by INCOS. RSCI modes and frequencies are not commanded by the GPDC at any time.

Data link system interface is shown in Figure 5-2.

5.1.3 Data Exchange. The S-3 aircraft has the option of operating as a picket or the NCS. The NCS starts an automatic roll call of all the PUs within the tactical data net, addressing each picket with its own coded address. After a picket is addressed, the NCS waits for the addressed picket to transmit its tactical data over the radio link before addressing the next picket. If the PU does not respond during the allocated time the PU is interrogated again. If a response is not received after the second interrogation, the PU will be skipped until the next roll call cycle. When the picket aircraft decodes its own address, it transmits its tactical data to the NCS. All Link 11 net pickets that are within radio link range of the transmitting picket receive the transmitted tactical data.

When an S-3 is the NCS, only those PUs in the PU list will be interrogated, thus they are the only units that will transmit data to other PUs. If a PU is not in the PU list of the NCS, it will receive data only. When an S-3 is operating as a picket, only data from PUs in the PU list will be displayed to the operator.

5.1.4 Control Functions

5.1.4.1 Off-Line Controls and Indicators. Data link system off-line controls are located at the COTAC center console. All controls and indicators required for off-line control are included on the RSCI panel. In operating off-line, the HF radio or one of the UHF radios may be selected to transmit data from the DTS. Transmission in clear or secure data modes may be used. Upper sideband, lower sideband, or both sidebands may be selected for data transmission over the HF radio. The data silence function is selectable for the HF and UHF radios during any data mode. While selected, all data transmission is terminated (except own emergencies and short broadcast); however, data

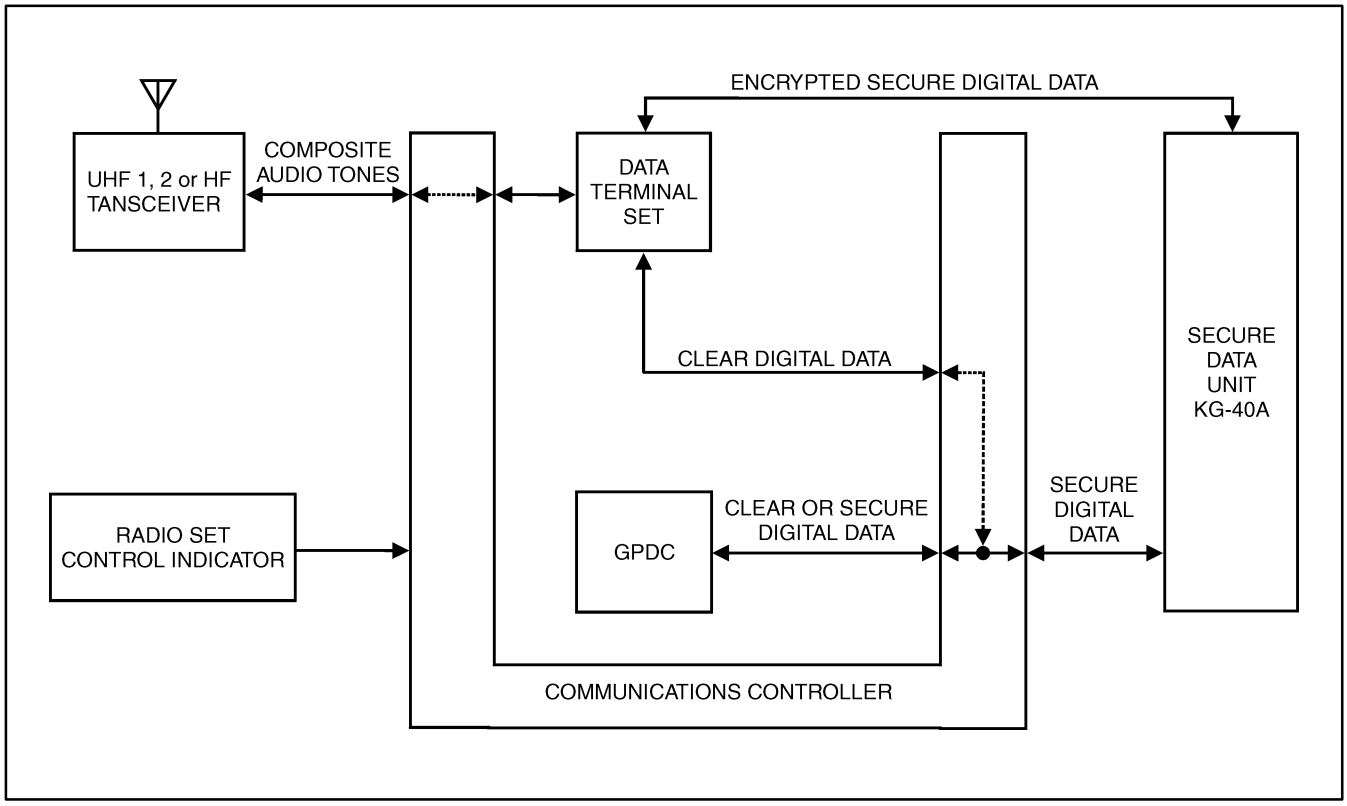

Figure 5-2. Data Link System Interface

messages are still received and processed through the radio receiver.

5.1.4.2 On-Line Controls and Indicators. Tactical data communication is controlled by the COTAC, TACCO, or SENSO INCOS functions.

The operator selects the LINK CONT (link control) matrix, to make available housekeeping type option select functions. These functions include NET ACTIVE, GRID LOCK, ASW SUMRY, LINK PRMTR, IFF/SIF, TRACK MANAGE, and SONB STATUS.

The operator selects the LINK OPER (link operate) matrix, to make available option select functions used to report or acknowledge data. These functions include: SHORT BC, DATA SLNCE, ACK ORDER, SPCL POINT, INHIBT REMOTE, OWN EMER, ENGAGE STATUS, ASSEM REPORT, TN CALL, and TN AMPLIFY.

5.2 ON-LINE CONTROL FUNCTIONS

5.2.1 LINK CONT Matrix

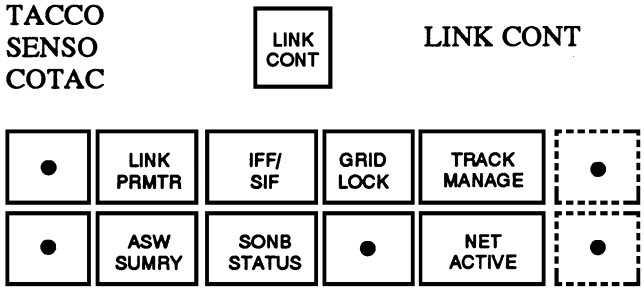

The following includes a functional description of all data link INCOS functions.

5.2.1.1 NET ACTIVE. Changes the DTS from the standby state to the operate state. In the operate state, a roll call procedure begins if the operator's unit is the NCS. If the operator's unit is a picket, the DTS is set in a receive state until an interrogation containing its own address is received. When a picket address is interrogated, the DTS will respond, if the DATA SLNCE option is not active, then return to a receive state. (If OWN EMER is active, DTS will transmit, overriding DATA SLNCE.) While in a receive state, the unit displays incoming PU and data link item symbology at appropriate positions on the tactical plot. The NET ACTIVE switch is deactivated and made available by pressing the switch while amber.

Check the PU LIST tableau for accuracy prior to activating the NET ACTIVE option. If necessary, this tableau should be modified as follows:

1. Enter OAC (own aircraft) PU through the LINK PRMTR tableau.
2. Enter OAC TN block through the LINK PRMTR tableau.
3. Enter all PUs respective TN blocks through the SEL LINE option in the PU LIST tableau.

Note

- If operating in the secure mode as NCS, to alleviate hardware interface problems, OAC PU number must be entered after each PU in the PU list. Otherwise, NCS will not receive data from any but the first picket in PU list.
- When operating in the picket mode own PU delays 10 net cycles following interrogation, before transmitting own data to ensure track number accountability.

5.2.1.2 GRIDLOCK. Establishes the data link system navigation reference with the NTDS/ATDS data link reference unit. Both received and transmitted data link information is corrected to eliminate navigation errors between PUs.

5.2.1.3 TRACK MANAGE. Initiates or terminates associations, and/or emergencies, for tracks assigned to the data link net. The operator may also delete associations on tracks associated by other PUs.

5.2.1.4 LINK PRMTR (Link Parameter). Enters Link 11 software initialization parameters, and enters DTS receive mode, data rate, error-correct or error label, sync mode, station mode, and net mode.

5.2.1.5 ASW SUMRY (ASW Summary). Allows tactical data transmission and reception from one ASW unit to another.

When an ASW Summary is performed, the relieved unit transmits its data to the relieving unit. These data that are transmitted will be, essentially, the last block of

safe data and is independent of any data that has been previously sent on the net. Items not previously assigned to the net need not be specifically designated for transmission. Sonobuoys that have been removed from the net (dropped track) will not be transmitted.

5.2.1.6 IFF/SIF (Identification Friend or Foe/ Selective Identification Feature). Enters the IFF/SIF modes for a track. It also allows the operator to request a code on a track from another PU.

5.2.1.7 SONB STATUS (Sonobuoy Status). Blacklit — Not Available.

5.2.2 LINK OPER Matrix

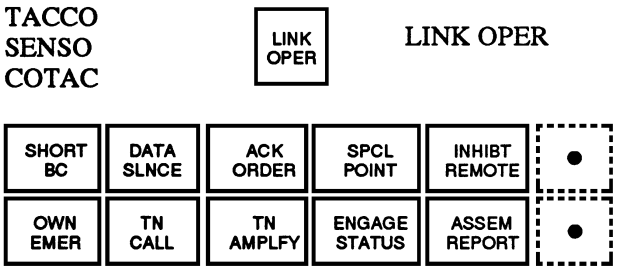

5.2.2.1 SHORT BC (Short Broadcast). Transmits all selected data link items to the net during one transmission. DATA SLNCE and NET ACTIVE are prerequisites for SHORT BC.

In the short broadcast mode, a picket transmits data without being interrogated. The transmitted data will be received by any unit within radio range that has its DTS configured properly.

Note

SHORT BC should not be used during roll call data link operation.

5.2.2.2 OWN EMER (Own Emergency). Transmits own aircraft emergency and intentions to all members of the data link net. Only OWN EMER report is transmitted when selected. All items previously reported by OAC are inhibited. OWN EMER is only transmitted twice.

5.2.2.3 DATA SLNCE (Data Silence). Prevents an automatic response to a roll call interrogation containing own unit address or inhibits the roll call if operating as the NCS. An active DATA SLNCE function turns the SHORT BC status indicator green (previously black).

5.2.2.4 TN CALL (Track Number Call). Centers a specific link track on the operator's display.

Note

Activation of TN CALL activates TN AMPLIFY option.

5.2.2.5 ACK ORDER (Acknowledge Order). Enables the operator to read and respond to received data link orders.

5.2.2.6 TN AMPLFY (Track Number Amplify). Displays the link track number associated with each local and remote symbol presently on the net.

5.2.2.7 SPCL POINT (Special Point). Enters a special point into system data for display and transmission to the net.

5.2.2.8 ENGAGE STATUS. Reports OAC engagement status of a track to the net.

5.2.2.9 INHIBT REMOTE. Inhibits the display of remote data link items on the tactical display at the activating station only.

5.2.2.10 ASSEM REPORT (Assemble Report). Assigns local contacts for transmission to the data link net and drops local data link items from the net. NET ACTIVE is the prerequisite for ASSEM REPORT function.

5.3 LINK CONT MATRIX

PURPOSE:

Displays option select legends associated with LINK CONT (Link Control).

PREREQUISITE:

None.

PROCEDURE:

1. Press LINK CONT (lights amber).

Note

- Link Control legend on COTAC INCOS is LNK CTL.

- LNK CTL at COTAC station does not light amber when pressed. Legend goes black and matrix C RETAIN SYMBOL legend appears.

   a. Data link matrix LINK CONT option select function legends are displayed in the upper half of the TACCO or COTAC matrix A option select switches.

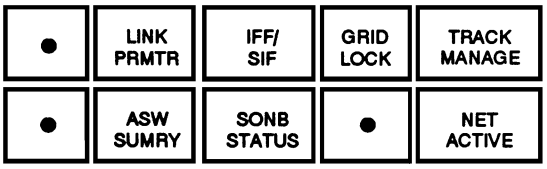

DEACTIVATION:

1. LINK CONT matrix is deactivated when another matrix A is selected at the TACCO/SENSO station or any matrix is selected at the COTAC station.

2. Deactivation results:

   a. LINK CONT option select function legends are replaced by another set of option select function legends.

   b. LINK CONT changes from amber to green.

Note

Deactivation of individual option select functions is independent of matrix mode deactivation.

5.3.1 LINK PRMTR Option

TACCO
SENSO
COTAC

LINK CONT

PURPOSE:

Enables the operator to enter or check the status of data link parameters and provides the capability to enter or modify the DTS configuration.

PREREQUISITE:

1. LINK CONT/LNK CTL matrix is active.

PROCEDURE:

1. Press LINK PRMTRS (lights amber).

   a. Link 11 Parameters tableau is displayed.

   b. The following cue appears:

```
SEL LINK PRMTRS
1 OAC      6 ERR
2 TNPL     7 SYNC
3 DLRP     8 FREQ
4 STA      9 MODE
5 RATE
```

Note

The NET ACTIVE option should be deselected prior to modifying any parameters via this cueing sequence. Failure to do so may adversely affect the operation of the data link system.

2. Respond to the SEL LINK PRMTRS cue.

   a. If cue decision 1 (OAC) is selected, proceed to step 3.

   b. If cue decision 2 (TNPL) is selected, proceed to step 6.

   c. If cue decision 3 (DLRP) is selected, proceed to step 11.

   d. If cue decision 4 (STA) is selected, proceed to step 16.

e. If cue decision 5 (RATE) is selected, proceed to step 19.

f. If cue decision 6 (ERR) is selected, proceed to step 22.

g. If cue decision 7 (SYNC) is selected, proceed to step 25.

h. If cue decision 8 (FREQ) is selected, proceed to step 28.

i. If cue decision 9 (MODE) is selected, proceed to step 31.

3. Press ENTER.

   a. The following cue appears:

      ENT OAC ADDRESS
      --

Note

- Entry range is 1 through 76 (octal).
- OAC address should be correct before entering any system fixes or tracks.

4. Respond to the ENT OAC ADDRESS cue.

   a. Press the desired numbers on the keyset.

5. Press ENTER.

   a. PU address appears on line 5, pages 1 and 2 of the tableau.

   b. SEL LINK PRMTRS cue is redisplayed.

6. Press ENTER.

   a. The following cue appears:

      ENT LOWER TN

Note

Entry range is 200 through 7775 (octal).

7. Respond to the ENT LOWER TN cue.

   a. Press the desired numbers on the keyset.

8. Press ENTER.

   a. The following cue appears:

      ENT UPPER TN
      --

Note

Entry range is 201 through 7776 (octal).

9. Respond to the ENT UPPER TN cue.

   a. Press the desired numbers on the keyset.

10. Press ENTER.

    a. Upper and lower track numbers appear on line 6, pages 1 and 2 of the tableau.

    b. SEL LINK PRMTRS cue is redisplayed.

11. Press ENTER.

    a. The following cue appears:

       ENT LATITUDE
       -- -- ---

12. Respond to the ENT LATITUDE cue.

    a. Press the desired numbers on the keyset.

13. Press ENTER.

    a. The following cue appears:

       ENT LONGITUDE
       ---

14. Respond to the ENT LONGITUDE cue.

    a. Press the desired numbers on the keyset.

15. Press ENTER.

    a. Latitude and longitude appear on lines 7 and 8, respectively, of the Link 11 PARAMETERS tableau and also on lines 6 and 7, respectively, of the NAV PREFLIGHT tableau.

    b. SEL LINK PRMTRS cue is redisplayed.

c. If the following alert appears:

ZZZZ DLRP LIM EXCD

(1) The DLRP to OAC distance has exceeded the limit.

(2) NET ACTIVE is deactivated.

d. If the following alert appears:

ZZZZ DLRP LIM 100

(1) The DLRP to OAC is within 100 nm of the limit.

16. Press ENTER.

a. The following cue appears:

SEL STA MODE
1 PICKET
2 NCS

17. Respond to the SEL STA MODE cue.

a. Press the desired numbers on the keyset.

18. Press ENTER.

a. If cue decision 1 (PICKET) is selected, own aircraft is designated as the picket, and PICKET appears on line 9, page 1 of the tableau.

b. If cue decision 2 (NCS) is selected, own aircraft is designated as the NCS, and NCS appears on line 9, page 1 of the tableau. OAC number appears on line 1, page 2 of the tableau.

c. SEL LINK PRMTRS cue is redisplayed.

Note

If the NET ACTIVE option is active, it will be deactivated automatically (NET ACTIVE becomes green available) when changing from NCS to PICKET, PICKET to NCS, or NCS to NCS. NET ACTIVE must be reactivated to reenter the net.

19. Press ENTER.

a. The following cue appears:

SEL DATA RATE
1 FAST
2 SLOW-NORM
3 SLOW-LONG

20. Respond to the SEL DATA RATE cue.

a. Press the desired numbers on the keyset.

21. Press ENTER.

a. If cue decision 1 (FAST) is selected, the data rate is set to fast, and FAST appears on line 10, page 1 of the tableau.

b. If cue decision 2 (SLOW-NORM) is selected, the data rate is set to slow normal, and SLOW-NORM appears on line 10, page 1 of the tableau.

c. If cue decision 3 (SLOW-LONG) is selected, the data rate is set to slow long, and SLOW-LONG appears on line 10, page 1 of the tableau.

d. SEL LINK PRMTRS cue is redisplayed.

22. Press ENTER.

a. The following cue appears:

SEL ERROR DETECT
1 CORRECT
2 LABEL

23. Respond to the SEL ERROR DETECT cue.

a. Press the desired numbers on the keyset.

24. Press ENTER.

a. If cue decision 1 (CORRECT) is selected, the DTS is set to the error correct mode, and CORRECT appears on line 11, page 1 of the tableau.

Note

CORRECT should be used only when RQ for other units is high.

b. If cue decision 2 (LABEL) is selected, the DTS is set to the error label mode, and

LABEL appears on line 11, page 1 of the tableau.

c. SEL LINK PRMTRS cue is redisplayed.

25. Press ENTER.

a. The following cue appears:

SEL SYNC CONTROL
1 FAST + CONTIN
2 STORED

26. Respond to the SEL SYNC CONTROL cue.

a. Press the desired numbers on the keyset.

27. Press ENTER.

a. If cue decision 1 (FAST + CONTIN) is selected, the sync control is set to fast continuous, and FAST CONT appears on line 12, page 1 of the tableau.

b. If cue decision 2 (STORED) is selected, the sync control is set to stored, and STORED appears on line 12, page 1 of the tableau.

c. SEL LINK PRMTRS cue is redisplayed.

28. Press ENTER.

a. The following cue appears:

SEL FREQ STD
1 INTERNAL
2 EXTERNAL

29. Respond to the SEL FREQ STD cue.

a. Press the desired numbers on the keyset.

30. Press ENTER.

a. If cue decision 1 (INTERNAL) is selected, the frequency standard is set to internal, and INTERNAL appears on line 13, page 1 of the tableau.

b. If cue decision 2 (EXTERNAL) is selected, the frequency standard is set to external, and EXTERNAL appears on line 13, page 1 of the tableau.

Note

External frequency standard is provided by the HF radio.

c. SEL LINK PRMTRS cue is redisplayed.

31. Press ENTER.

The following cue appears:

SEL NET MODE
1 ROLL CALL
2 NET SYNC

32. Respond to the SEL NET MODE cue.

a. Press the desired numbers on the keyset.

33. Press ENTER.

a. If cue decision 1 (ROLL CALL) is selected, the net mode is set to roll call, and ROLL CALL appears on line 14, page 1 of the tableau.

b. If cue decision 2 (NET SYNC) is selected, the net mode is set to net sync, and NET SYNC appears on line 14, page 1 of the tableau.

c. The following cue appears:

ENT RNG TO NCS-NM

Note

- Entry range is 0 through 775.
- Enter range from OAC to NCS.
- Range to NCS will be updated automatically during ROLL CALL.

34. Respond to the ENT RNG TO NCS-NM cue.

35. Press ENTER.

a. Range entered appears on line 15, page 1 of the tableau.

b. SEL LINK PRMTRS cue is redisplayed.

DEACTIVATION:

1. LINK PRMTRS is deactivated if pressed when amber.

2. Deactivation results:

   a. All cues associated with LINK PRMTRS are removed from the display.

   b. LINK PRMTRS change from amber to green.

5.3.2 IFF, SIF Option

TACCO
SENSO
COTAC

LINK CONT

PURPOSE:

Allows the operator to enter the discrete identifier (DI) code and the IFF/SIF modes 1 and/or 2 codes for a track. It also allows the operator to request a code held by another PU on the hooked track.

Note

OAC codes are entered in the FLIGHT SUMMARY tableau.

PREREQUISITES:

1. LINK CONT/LNK CTL matrix is active.

2. HOOK VERIFY a track.

PROCEDURE:

1. Press IFF/SIF (lights amber).

   a. The following cue appears:

   ENT DI CODE
   - - - -
   OPTNL

Note

Entry range is 0000 through 7777 (octal).

2. Press ENTER.

   a. The following cue appears:

   ENT MODE 1
   --00
   OPTNL

Note

- Entry range is 0 through 73 (octal).
- Code range is 1100 through 7300.

   b. If the following alert appears:

   DATA SLNCE ACTIVE

   (1) The DATA SLNCE function is active.

   c. If the following alert appears:

   LINK NET INACT

   (1) The Link 11 Net is inactive.

3. Respond to the cue.

   a. If suggested entry is accepted, proceed to step 4.

   b. If suggested entry is not accepted, press desired number (0 through 73) on keyset.

   c. If the operator is requesting a code of a hooked track, press 00 on keyset.

4. Press ENTER.

   a. The following cue appears:

   ENT MODE 2
   --
   OPTNL

Note

Entry range is 0000 through 7777 (octal).

5. Respond to the cue.

   a. If suggested entry is accepted, proceed to step 6.

   b. If suggested entry is not accepted, press desired numbers (0000 through 7777) on the keyset. Proceed to step 6.

c. If the operator is requesting a code from another PU, press 0000 on the keyset. Proceed to step 6.

6. Press ENTER.

a. The appropriate message is transmitted.

b. A response of IFF/SIF code is displayed in the FIX AMPLIFY tableau.

DEACTIVATION:

1. IFF/SIF is deactivated if pressed when amber.

2. Deactivation result:

a. IFF/SIF changes from amber to green.

5.3.3 GRID LOCK Option

TACCO
SENSO
COTAC

GRID LOCK

LINK CONT

PURPOSE:

Allows the operator to more accurately position incoming and outgoing data link information.

Note

- Operator can gridlock using a remote track and a local track, a remote PU and a local fix or track, or a remote track or PU with available tacan information. In all cases other than a tacan gridlock, the local and remote items must be of the same category.

- Gridlock should be performed after a GEO CORR is accepted and all fixes should be updated or dropped from the net.

- The option for TACAN GRID LOCK is available through operator selection. TACAN GRID LOCK has the same accuracy as TACAN GEO CORRECT (see Figure 4-3). Long range tacan and gridlocks should be used with caution. The tactical situation often determines which grid-lock source should be used. Refer to NAVAIR 01-S3AAB-1A.

PREREQUISITES:

1. LINK CONT/LNK CTL matrix is active.

2. NET ACTIVE function is active.

PROCEDURE:

1. Press GRID LOCK (lights amber).

a. The following cue appears:

SEL ZERO PADS
1 YES
2 NO

2. Respond to the cue.

a. If cue decision 1 (YES) is entered, any previous gridlock correction pads are cleared and GRID LOCK changes from amber to green.

b. If cue decision 2 (NO) is entered, new grid lock pads are calculated at the completion of the cueing sequence.

Note

- Gridlock pads should be zeroed prior to the first gridlock with a GRU.

- Periodic gridlocks may be required to keep NTDS/ATDS plot stabilized.

3. Press ENTER.

a. The following cue appears:

SEL SOURCE
1 TACAN
2 OTHER

4. Respond to the cue.

a. If cue decision 1 (tacan) is selected, proceed to step 5.

b. If cue decision 2 (other) is selected, proceed to step 7.

5. Press ENTER.

   a. If the following alert appears:

      DATA UNAVAIL

      (1) Tacan data are invalid or unavailable and the function will terminate.

   b. The following cue appears:

      HOOK REMOTE SYMBOL

   c. Hook a remote surface friendly track or PU.

6. Press ENTER.

   a. The gridlock pads are computed and all received remote symbols and transmitted data link messages are corrected by the amount of the gridlock pad computations.

Note

For this function, station altitude is considered 0; station MVAR = AIRCRAFT SYSTEM MAG VAR and TACAN DME (slant range) is converted to horizontal (ground) range.

   b. Function deactivates.

7. Press ENTER.

   a. If the following alert appears:

      LINK NET INACT

      (1) The NET ACTIVE function is not active.

   b. The following cue appears:

      HOOK REMOTE SYMBOL

   c. Hook a remote PU, fix, or track.

8. Press ENTER.

   a. The following cue appears:

      HOOK LOCAL SYMBOL

   b. Hook a local symbol representing a PU, fix, or track that corresponds to the remote symbol hooked in step 7c.

Note

The local symbol must be of the same CAT/ID as the remote symbol.

9. Press ENTER.

   a. The gridlock pads are computed and all received remote symbols, and transmitted data link messages are corrected by the amount of the gridlock pad computation.

   b. Function deactivates.

DEACTIVATION:

1. GRID LOCK is deactivated if pressed when amber.

2. Deactivation results:

   a. GRID LOCK function is terminated.

   b. GRID LOCK changes from amber to green.

5.3.4 TRACK MANAGE Option

TACCO
SENSO
COTAC

LINK CONT

PURPOSE:

Allows the operator to associate two link tracks, or to declare an emergency or alert on a link track.

PREREQUISITES:

1. LINK CONT/LNK CTL matrix is active.

2. TAC PLOT, ESM, or radar PP is displayed.

PROCEDURE:

1. Hook verify the desired track symbol.

2. Press TRACK MANAGE (lights amber).

   a. TRACK MANAGE tableau is displayed.

b. The following cue appears:

SEL TRACK MANAGE
1 EMERGENCY
2 ASSOCIATION

3. Respond to the cue.

a. If cue decision 1 (EMERGENCY) is selected, proceed to step 4.

b. If cue decision 2 (ASSOCIATION) is selected, proceed to step 7.

4. Press ENTER.

a. The following cue appears:

SEL MANAGE ACTION
1 INITIATE
2 TERMINATE
3 DELETE

5. Respond to the cue.

6. Press ENTER.

a. If cue decision 1 (INITIATE) is selected, the following alert appears.

ZZZZ TRK ALERT YYYY

Note

ZZZZ represents time. YYYY represents track number.

b. If cue decision 2 (TERMINATE) is selected, the following alert appears:

ZZZZ ALT TRM YYYY

c. If cue decision 3 (DELETE) is selected, the track alert that was remotely initiated is deleted, and the following alert appears:

ZZZZ ALT TRM YYYY

7. Press ENTER.

a. The following cue appears:

HOOK SECOND SYMBOL

b. Hook the symbol to be associated with the previously hooked symbol.

8. Press ENTER.

a. The following cue appears:

SEL MANAGE ACTION
1 INITIATE
2 TERMINATE
3 DELETE

9. Respond to the cue.

10. Press ENTER.

a. If cue decision 1 (INITIATE) is selected, the two hooked symbols are associated and the following alert appears:

ZZZZ TRK ASSN YYYY

Note

ZZZZ represents time. YYYY represents the first track number.

b. If cue decision 2 (TERMINATE) is selected, the association is terminated, and the following alert appears:

XXXX ASSN TRM YYYY

c. If cue decision 3 (DELETE) is selected, the remotely initiated track association is deleted.

Note

- All track manage function actions are reflected in the TRACK MANAGEMENT tableau, including those initiated by remote units. The operator is informed of remotely initiated track manage functions by the alerts:

  ZZZZ TRK ALERT YYYY
  ZZZZ TRK ASSN YYYY
  ZZZZ F-TELL YYYY

- The F-TELL alert indicates that a remote unit has transmitted a high priority FORCE TELL track that will be received even if the S-3 remote track capacity has been reached. To examine any of these tracks, either display the TRACK

MANAGEMENT tableau (step 2) or locate the track YYYY (using TN CALL if necessary) and amplify.

- The ALERT TRM and ASSN TRM alerts are automatically formatted for transmission whenever the appropriate tracks are destroyed by DSTRY DATA or removed from the net by ASSEM REPORT.

DEACTIVATION:

1. TRACK MANAGE is deactivated if pressed when amber.

2. Deactivation result:

   a. TRACK MANAGE changes from amber to green.

5.3.5 ASW SUMRY Option

TACCO
SENSO
COTAC

LINK CONT

PURPOSE:

Allows the operator to transmit to (or receive from) a specific PU, a summary of all eligible local data.

PREREQUISITES:

1. LINK CONT/LINK CTL matrix is active.

2. NET ACTIVE function is active.

PROCEDURE:

1. Destroy all data not intended for transmission.

2. Press ASW SUMRY (lights amber).

   a. The following cue appears:

      ENT PU ADDRESS
      --

3. Respond to the cue.

   a. Enter other unit's PU number.

4. Press ENTER.

   a. The following cue appears:

      SEL SUMRY MODE
      1 TRANSMIT — S3
      2 RECEIVE — S3
      3 TRANSMIT — OTHER
      4 RECEIVE — OTHER

Note

- Options 1 and 2 configure the data link system for automatic transfer of reporting responsibility to the receiving unit (S-3 to S-3).

- Options 3 and 4 do not automatically transfer reporting responsibility to the receiving unit.

- Options 3 and 4 may be used to transfer the tactical data base between S-3s when reporting responsibility is to be maintained by the transmitting unit.

5. Respond to the SEL SUMRY MODE cue.

   a. If OAC is the transmitting A/C, the receiving A/C is an S-3, and automatic transfer of reporting responsibility is desired, the operator should select option 1 (TRANSMIT-S3). Proceed to step 6.

   b. If OAC is the receiving A/C, the transmitting A/C is an S-3, and automatic transfer of reporting responsibility is desired, the operator should select option 2 (RECEIVE-S3). Proceed to step 9.

   c. If OAC is the transmitting A/C, the receiving A/C is not an S-3, or automatic transfer of reporting responsibility is not desired, the operator should select option 3 (TRANSMIT-OTHER). Proceed to step 12.

   d. If OAC is the receiving A/C, the transmitting A/C is not an S-3, or automatic transfer of reporting responsibility is not desired, the

operator should select option 4 (RECEIVE-OTHER). Proceed to step 13.

6. Press ENTER.

   a. The summary is transmitted on the next transmission opportunity.

   b. If the following alert appears:

      ZZZZ SUMRY GOOD

      (1) The receiving PU acknowledged receipt of the summary.

      (2) ASW SUMRY changes from amber to black.

      (3) OAC data link system NET ACTIVE function is deactivated.

      (4) Link track numbers are removed from all local data.

   c. If the following alert appears:

      ZZZZ SUMRY FAIL

      (1) The summary has been transmitted five times and no acknowledgment has been received from the receiving PU.

   d. The following cue appears:

      RELINQUISH RR
      1 YES
      2 NO

7. Respond to the RELINQUISH RR cue.

8. Press ENTER.

   a. If cue decision 1 (YES) is selected, reporting responsibility for all data link is relinquished.

   b. If cue decision 2 (NO) is selected, reporting responsibility is retained.

   c. ASW SUMRY and NET ACTIVE functions are deactivated.

Note

By retaining reporting responsibility, the operator will be able to reactivate ASW SUMRY and NET ACTIVE functions in order to transmit another summary.

9. Press ENTER.

   a. The aircraft receives the summary.

   b. If the following alert appears:

      ZZZZ SUMRY GOOD

      (1) The summary has been received with no errors.

      (2) The receiving aircraft assumes reporting responsibility.

   c. If the summary was received with errors, the following cue and alert appears:

      SEL SUMRY ACCEPT
      1 ACCEPT
      2 REJECT

      ZZZZ SUMRY FAIL

10. Respond to the cue.

11. Press ENTER.

    a. If cue decision 1 (ACCEPT) is selected, the data in the summary that has errors is discarded, and the data that has no errors is accepted.

Note

The receiving station assumes reporting responsibility for remote tracks, unless the summary (OTHER) mode was selected.

    b. If cue decision 2 (REJECT) is selected, the summary is rejected.

Note

Reporting responsibility is not assumed by the receiving station. If in the S-3 summary mode, the transmitting station must reactivate the data link system to provide net continuity.

12. Press ENTER.

    a. The ASW summary is transmitted five times or until an acknowledgment is received.

        (1) In either case, normal roll call mode is resumed.

    b. If the following alert appears:

        ZZZZ SUMRY GOOD

        (1) An acknowledgment has been received.

        (2) Normal roll call continues.

        (3) ASW SUMRY is deactivated.

    c. If the following alert appears:

        ZZZZ SUMRY FAIL

        (1) The summary has been transmitted five times and no acknowledgment has been received.

        (2) Normal roll call continues.

        (3) ASW SUMRY is deactivated.

13. Press ENTER.

    a. The data link system is configured to receive the summary.

    b. If the following alert appears:

        ZZZZ SUMRY GOOD

        (1) The summary has been received without errors.

        (2) An acknowledgment is sent.

        (3) Normal roll call continues.

        (4) ASW SUMRY is deactivated.

    c. If the following alert appears:

        ZZZZ SUMRY FAIL

        (1) The received summary contains one or more errors.

        (2) An acknowledgment is not sent.

        (3) The following cue appears:

            SEL SUMRY ACCEPT
            1 ACCEPT
            2 REJECT

        (4) Perform steps 10 and 11.

        (5) Normal roll call continues.

        (6) ASW SUMRY is deactivated

DEACTIVATION:

1. ASW SUMRY is deactivated when the following occurs:

    a. ASW SUMRY is pressed when amber before responding to the SEL SUMRY MODE cue.

    b. Display of the SUMRY GOOD alert in the TRANSMIT-OTHER or the RECEIVE-OTHER modes.

    c. Display of the SUMRY FAIL alert in the TRANSMIT-OTHER mode.

    d. Upon answering the SEL SUMRY ACCEPT cue in the RECEIVE-S3 mode or RECEIVE-OTHER mode.

    e. Display of the SUMRY GOOD alert in the TRANSMIT-S3 mode prior to automatic net deactivation.

    f. Upon answering the RELINQUISH RR cue in the TRANSMIT-S3 mode prior to automatic net deactivation.

2. Deactivation results:

    a. ASW SUMRY changes from amber to green if deactivation occurs as a result of items a through d above.

    b. ASW SUMRY changes from amber to black if deactivation occurs as a result of items e and f above.

Note

- Receiving aircraft should always configure for ASW summary before the transmitting aircraft.
- If ASW summary is accomplished on an exclusive net, the receiving station should configure as NCS.
- An ASW summary can be accomplished on an established net without interrupting the net.

5.3.6 SONB STATUS (Sonobuoy Status). Blacklit — Not available.

5.3.7 NET ACTIVE Option

TACCO
SENSO
COTAC

LINK CONT

PURPOSE:

Enables the operator to initiate a net sync or to allow OAC to participate in a link net.

PREREQUISITES:

1. LINK CONT/LNK CTL matrix is active.
2. Data terminal set controls, Link 11 parameters, and PU list must be properly configured to establish Link 11 operation.

PROCEDURE:

1. Press NET ACTIVE (lights amber).
   a. The following functions become available at all stations:

      OWN EMER
      ASW SUMRY
      SHORT BC (if DATA SLNCE is active).

   b. If the data link system is in the ROLL CALL mode, the DTS is placed in the operate mode.
   c. If the data link system is in the NET SYNC mode, the DTS is placed in the NET SYNC mode.
   d. If the following alert appears:

      LINK 11 DOWN

      (1) CC is disabled and the last COMM reinitialization was unsuccessful.

   e. If the following alert appears:

      INCOMPLETE PRMTRS

      (1) All required parameters have not been entered. Review Link 11 PARAMETERS tableau.

      (2) Data not selected on RSCI.

   f. If the following alert appears:

      ZZZZ DLRP LIM EXCD

      (1) The DLRP to OAC distance has exceeded the limit.

      (2) NET ACTIVE is deactivated.

   g. If the following alert appears:

      ZZZZ DLRP LIM 100

      (1) The DLRP to OAC distance is within 100 nm of the limit.

DEACTIVATION:

1. NET ACTIVE is deactivated when one of the following occurs:
   a. NET ACTIVE is pressed when amber.
   b. After the completion of a TRANSMIT-S3 type ASW summary.
   c. Upon display of the DLRP LIM EXCD alert.
   d. Upon valid response to the SEL STA MODE cue.
   e. COMM REINIT.

2. Deactivation results:

   a. NET ACTIVE changes from amber to green at all stations.

   b. If the data link system is in the ROLL CALL mode, the DTS is placed in the standby mode.

   c. The following options become unavailable at all stations:

      OWN EMER
      ASW SUMRY
      SHORT BC

5.4 LINK OPER MATRIX

TACCO
SENSO
COTAC

LINK OPER

PURPOSE:

Displays option select function legends associated with LINK OPER (Link Operate).

PREREQUISITE:

None.

PROCEDURE:

1. Press LINK OPER (lights amber).

Note

- Link operate legend on the COTAC INCOS is LNK OPR.
- LNK OPR at COTAC station does not light amber when pressed. The legend goes black and the matrix C AMPLFY legend appears.

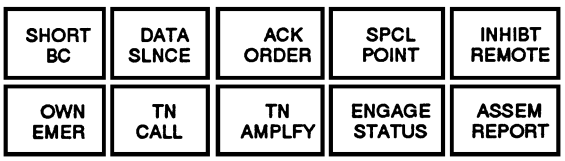

DEACTIVATION:

1. LINK OPER is deactivated when another matrix A mode is selected at the TACCO or SENSO station or any matrix is selected at the COTAC station.

2. Deactivation results:

   a. LINK OPER option select function legends are replaced by another set of option select function legends.

   b. LINK OPER switch changes from amber to green.

Note

Deactivation of individual option select functions is independent of matrix mode deactivation.

5.4.1 SHORT BC Option

TACCO
SENSO
COTAC

LINK OPER

PURPOSE:

Allows the operator to transmit data when the DATA SLNCE function is active.

Note

SHORT BC should not be used during ROLL CALL data link operation.

PREREQUISITES:

1. NET ACTIVE option select function is active (LINK CONT matrix).

2. LINK OPER/LNK OPR matrix is active.

3. DATA SLNCE function is active.

PROCEDURE:

1. Press SHORT BC (momentary).

   a. The following alert appears:

      FUNCTION ACTVTD

   b. Data link transmit function is activated for the transmission of data designated by the ACK ORDER and ASSEM REPORT functions.

   c. SHORT BC function is activated at the DTS to start data transmission.

Note

- Upon completion of the data transmission, the DTS automatically reverts to the DATA SLNCE mode.
- Upon activation of SHORT BC, the SHORT BC and DATA SLNCE switches will momentarily go black while the data are being transmitted.
- If the DTS hangs up in SHORT BC, both the SHORT BC and DATA SLNCE switches will go black and the broadcast will not be sent. To recover from this condition, cycle the NET ACTIVE option select switch OFF then ON. Ensure DATA SLNCE is still active and reattempt SHORT BC. If this fails, a COMM reinitialization may be necessary.

5.4.2 DATA SLNCE Option

TACCO
SENSO
COTAC

LINK OPER

PURPOSE:

Selects a no transmit condition.

Note

Only OWN EMER and SHORT BC transmissions override the DATA SLNCE option.

PREREQUISITES:

1. LINK OPER/LINK OPR matrix is active.

PROCEDURE:

1. Press DATA SLNCE (lights amber).

Note

The DATA SLNCE switch on the RSCI functions identically to the DATA SLNCE option select switch. Both switches reflect the current status of the DATA SLNCE function.

   a. Upon activation, the following occurs:

      (1) The SHORT BC switch lights green at all stations.

      (2) Active output buffers become inactive.

      (3) DTS is placed in the data silence mode.

DEACTIVATION:

1. DATA SLNCE is deactivated if pressed when amber.

2. Deactivation results:

   a. SHORT BC changes from green to black.

   b. DATA SLNCE changes from amber to green.

   c. DTS is placed in the roll call mode of operation.

5.4.3 ACK ORDER Option

TACCO
SENSO
COTAC

LINK OPER

PURPOSE:

Enables the operator to read a received data link order displayed in the LINK 11 ORDER tableau and to respond to the order.

PREREQUISITES:

1. LINK OPER/LNK OPR matrix is active.
2. NET ACTIVE function is active (LINK CONT matrix).
3. Order is received from another member of the net.

PROCEDURE:

1. The following alert appears if own unit is not currently processing an order:

   ACK LINK ORDER

2. The following alert appears if own unit has received a second LINK ORDER that is currently in memory:

   LINK ORDER PENDING

3. Press ACK ORDER (lights amber).

   a. The LINK 11 ORDER tableau is displayed.

   b. If the received order is other than HOLD FIRE, the following cue appears:

      SEL ACK ORDER
      1 WILCO
      2 CANTCO

      (1) Proceed to step 4.

   c. If the received order is HOLD FIRE displayed as CEASE ENGAGE, the following cue appears:

      PRESS ENTER TO
      ACK ORDER

      (1) Proceed to step 6.

4. Respond to SEL ACK ORDER.
5. Press ENTER.

   a. Transmits a (1) will comply or (2) cannot comply message to the order originator.

   b. ACK ORDER is deactivated.

   c. LINK 11 ORDER tableau is updated.

6. Press ENTER.

   a. LINK 11 ORDER tableau is updated.

Note

- OAC will automatically issue a CANTPRO response to received orders under the following conditions:

  1. An invalid order is received.
  2. A third (or subsequent) link order is received before the first two are answered.

- The operator will not be advised of the CANTPRO response.

DEACTIVATION:

1. ACK ORDER is deactivated if pressed when amber, or when cueing sequence is completed.
2. Deactivation results:

   a. ACK ORDER function is terminated.

   b. ACK ORDER changes from amber to green.

5.4.4 SPCL POINT Option

TACCO
SENSO
COTAC

LINK OPER

PURPOSE:

Enables the operator to enter a special point into system data for display and transmission.

PREREQUISITES:

1. LINK OPER/LNK OPR matrix is active.
2. A hooked position is on the MPD.
3. TAC PLOT, ESM, or radar PPI is displayed.

PROCEDURE:

1. Press SPCL POINT (lights amber).
2. The following cue appears:

   SEL SPCL PT
   1 DOWNED AC
   2 DISTRESSED VESSEL
   3 MAN IN WATER

3. Respond to the cue.
4. Press ENTER.
   a. Transmits the special point message to all members of the net.
   b. Displays appropriate symbology on all displays.
   c. SPCL POINT is deactivated.

DEACTIVATION:

1. SPCL POINT is deactivated if pressed when amber, or when cueing sequence is completed.
2. Deactivation results:
   a. SPCL POINT function is terminated.
   b. SPCL POINT changes from amber to green.

5.4.5 INHIBT REMOTE Option

TACCO
SENSO
COTAC

LINK OPER

PURPOSE:

Inhibits the display of remote data at the activating station.

Note

Remote symbols are still received, processed, and displayed at other positions.

PREREQUISITE:

1. LINK OPER/LNK OPR matrix is active.

PROCEDURE:

1. Press INHIBT REMOTE (lights amber).
   a. Upon activation, all presently displayed remote symbols received over the LINK 11 are removed from the display of the requesting station.

DEACTIVATION:

1. INHIBT REMOTE is deactivated if pressed when amber.
2. Deactivation results:
   a. Remote symbols received from LINK 11 are displayed at the requesting station.

5.4.6 OWN EMER Option

TACCO
SENSO
COTAC

LINK OPER

PURPOSE:

Reports on emergency condition within own aircraft over LINK 11.

PREREQUISITES:

1. NET ACTIVE function is active (LINK CONT matrix).
2. LINK OPER/LNK OPR matrix is active.
3. Roll call is selected in LINK PARAMETERS tableau.

PROCEDURE:

1. Press OWN EMER (lights amber).
   a. The following cue appears:

      SEL OWN EMER
      1 DITCH
      2 BAILOUT
      3 RTN TO BASE

2. Respond to the cue.

3. Press ENTER.

Note

- If DATA SLNCE is active, the program will attempt to deactivate the function and transmit the message.
- If own emergency has not been transmitted within 10 seconds, the following alert appears:

  ZZZZ EMER NOT XMTD

- After selecting own emergency, the data link system reports own emergency and stops reporting all other link tracks.

DEACTIVATION:

1. OWN EMER is deactivated if pressed when amber.
2. Deactivation results:
   a. Cue is removed from the activating operator's MPD.
   b. Transmission of the response to the cue is discontinued.
   c. OWN EMER changes from amber to green.

5.4.7 TN CALL Option

TACCO
SENSO
COTAC

LINK OPER

PURPOSE:

Allows the operator to recenter a specific link track on his display.

PREREQUISITES:

1. LINK OPER/LNK OPR matrix is active.
2. TAC PLOT, ESM, or radar PPI is displayed.

PROCEDURE:

1. Press TN CALL (lights amber).
   a. The following cue appears:

      ENT LINK TN
      - - - - -

2. Respond to the cue.
   a. Enter a valid PU, RU, or track number.

Note

The first and second character is entered with alpha or numeric, and the third, fourth, and fifth character is entered as numeric only. Press "SHIFT," then press "ALPHA NUM" on keyset to enter alphanumeric characters.

3. Press ENTER.
   a. The display is recentered on the position of the symbol of the track number entered.
   b. TN AMPLIFY is activated.

Note

- If the symbol for the track number selected was previously cleared, or if the INHIBT REMOTE option is active, the display is recentered and the following alert is displayed:

  SYMBOL CLEARED

- The symbol may be redisplayed through the REDSPL matrix options or by deactivating the INHIBT REMOTE option (if active).
- If the track number is not currently held in the system data base, the following alert appears:

  NOT IN SYSTEM

DEACTIVATION:

1. TN CALL is deactivated if pressed when amber.

2. Deactivation result:

   a. TN CALL changes from amber to green.

5.4.8 TN AMPLFY Option

TACCO
SENSO
COTAC

LINK OPER

PURPOSE:

Allows the operator to display the link track number associated with each local and remote symbol presently on the net.

PREREQUISITE:

1. LINK OPER/LNK OPR matrix is active.

PROCEDURE:

1. Press TN AMPLFY (lights amber).

   a. AMPLFY function is deactivated, if active.

   b. The link track number of each symbol is displayed next to the symbol.

Note

With ESM contacts on the TAC PLOT, if the bearings are assigned to the LINK and TN AMPLIFY is selected, the bearings are cleared from the display. If TN AMPLIFY is deselected, the bearing will be redisplayed.

DEACTIVATION:

1. TN AMPLFY is deactivated when one of the following occurs:

   a. TN AMPLFY is pressed when amber.

   b. Activation of the AMPLFY function, if deactivated.

2. Deactivation result:

   a. TN AMPLFY changes from amber to green.

5.4.9 ENGAGE STATUS Option

TACCO
SENSO
COTAC

LINK OPER

PURPOSE:

Reports an engaging/disengaging action on a track that has been transmitted on LINK 11.

PREREQUISITES:

1. LINK OPER/LNK OPR matrix is active.
2. Hook verify a local or remote link track.

PROCEDURE:

1. Press ENGAGE STATUS (lights amber).

   a. The following cue appears:

      SEL ENGAGEMENT
      1 INVESTIGATING
      2 FIRING
      3 KILLED
      4 DISENGAGED

2. Respond to the cue.
3. Press ENTER.

   a. The status is entered in the appropriate amplify tableau and assigned for transmission on the net.

DEACTIVATION:

1. Function is deactivated when one of the following occurs:

   a. Cueing sequence is completed.

   b. ENGAGE STATUS is pressed when amber.

2. Deactivation results:

   a. Terminates ENGAGE STATUS function.

   b. ENGAGE STATUS changes from amber to green.

5.4.10 ASSEM REPORT Option

TACCO
SENSO
COTAC

LINK OPER

PURPOSE:

Designates data for transmission or deletion over the data link net.

PREREQUISITES:

1. LINK OPER/LNK OPR matrix is active.
2. TAC PLOT, ESM, or radar PPI is displayed.

PROCEDURE:

1. Press ASSEM REPORT (lights amber).
   a. The following cue appears:

      SEL REPORT PROC
      1 ASSIGN
      2 DROP

2. Respond to the SEL REPORT PROC cue.
3. Press ENTER.
   a. If the following alert appears:

      LINK NET INACT

      (1) The NET ACTIVE function is not active.

   b. The following cue appears:

      HOOK LOCAL SYMBOL

   c. If cue decision 1 (ASSIGN) was selected, proceed to step 4.
   d. If cue decision 2 (DROP) was selected, proceed to step 8.
4. Respond to HOOK LOCAL SYMBOL cue.
   a. Hook the symbol to be assigned.
5. Press ENTER.
   a. If the hooked symbol is transmittable and does not have a TN assigned, the following cue appears:

      ENT LINK TN

      OPTNL

   b. If the following alert appears:

      SCALE EXCD

      (1) The hooked symbol is out of the range that can be reported in the message.

   c. If the following alert appears:

      LINK FILTER ACTIVE

      (1) The hooked symbol either lies within an active transmission filter, or is assigned a CAT ID whose filter is active.

6. Respond to the ENT LINK TN cue.
   a. If automatic track number assignment is desired, proceed to step 7.
   b. If automatic track number assignment is not desired, press desired number on the keyset and proceed to step 8.
7. Press SKIP cue.
   a. The next available track number is assigned and the item is transmitted to the next net cycle.
   b. The SEL REPORT PROC cue is redisplayed. Return to step 2.

Note

Occasionally, the ASSEMBLE REPORT function will fail to automatically assign a LINK TRACK number if the ENT LINK TN cue is skipped. Reassign a manual LINK TN via the ENT LINK TN cue.

8. Press ENTER.
   a. If cue decision 1 (ASSIGN) was selected, the TN is assigned, and the item is transmitted on the next net cycle.

b. If one of the following alerts appears:

INCONSISTENT DATA
INVALID ENTRY

(1) The track or fix hooked did not meet the criteria for assigning a track number already assigned to the net.

c. If the following alert appears:

TRK EXCD

(1) The difference in latitude or longitude from OAC to the hooked symbol exceeds the allowable limit of 512 nm.

d. If cue decision 2 (DROP) was selected, the appropriate drop track message is transmitted on the next net cycle and the following alert appears:

ZZZZ DROP TRACK XXXX

e. The SEL REPORT PROC cue is redisplayed. Return to step 2.

DEACTIVATION:

1. ASSEM REPORT is deactivated when one of the following occurs:

   a. Function procedures are completed.

   b. ASSEM REPORT is pressed when amber.

2. Deactivation results:

   a. Cues are removed from the activating operator display.

   b. ASSEM REPORT changes from amber to green.

5.5 DATA LINK SYSTEM CONFIGURATION

One position in the aircraft should be designated as the data link configuration control station. The hardware and software configuration will be accomplished in a step-by-step manner at the direction of the controlling operator.

5.5.1 Link Setup Procedure

1. KGX-40 control unit

   a. The KG-40 secure data keyer must be loaded with a KOI-18 crypto reader, coded with the proper code, prior to setting up the KGX control unit (Figure 5-3).

   b. Place the MODE switch to A1. A1 and A2 are identical in the S-3. B is a less secure mode and will be used only by direction of the net control station when mode A is defective.

   c. Rotate the FUNCTION switch sequentially through all its positions, starting with IND, and note the proper lights are lighted.

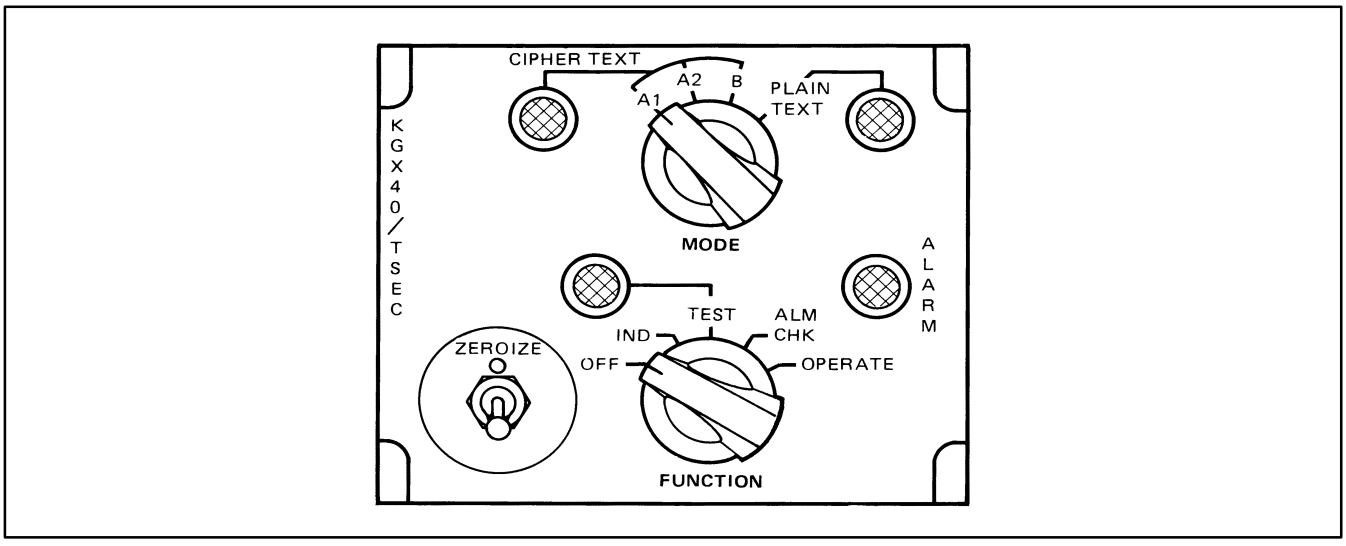

Figure 5-3. KGX-40/TSEC Remote Control Panel

(1) IND — This position turns on ac power to the KG-40A, and turns on the four indicator lights.

(2) TEST — With the switch in this position, an automatic GO/NO-GO test of the KG-40 is performed. If the KG-40A is operating properly, the TEST and ALARM lights will be on and either the CIPHER TEXT or the PLAIN TEXT light will go out. If A1, A2, or B is selected, the CIPHER TEXT light will stay on. If PLAIN TEXT is selected, the PLAIN TEXT light will remain on.

(3) ALM CHK — When the switch is set to this position, an automatic check of the alarm circuit in the KG-40A is performed. If the alarm circuit is functioning properly, the ALARM light will be on and either the CIPHER TEXT or the PLAIN TEXT light will remain on.

(4) OPERATE — In this position only the CIPHER TEXT or PLAIN TEXT light will be on indicating which is selected.

(5) To summarize the correct lighting sequence:

(a) IND — TEST, ALARM, CIPHER, TEXT, PLAIN TEXT

(b) TEST — TEST, ALARM, either CIPHER TEXT or PLAIN TEXT

(c) ALM CHK — ALARM and either CIPHER TEXT or PLAIN TEXT

(d) OPERATE — either CIPHER TEXT or PLAIN TEXT.

Note

- The SCR DATA FAIL indicator on the master caution panel operates with the KGX-40 ALARM light.
- Failure to obtain the above sequence of lights will prevent proper data link operation.
- To clear a transient ALARM condition, cycle the FUNCTION switch to ALM CHK and back to OPERATE.
- The KG-40A may occasionally hang up, preventing reception and transmission of data. There may not be an indication when this occurs other than nonreception of data. To clear the condition, cycle the function switch on the KGX-40 control box to the ALM CHK position and then back to the OPERATE position.

2. Radio Control

a. For aircraft configured with RSCI:

(1) UHF data link.

(a) Select link frequency on appropriate COMM page.

(b) Select UHF configuration control page.

(c) Toggle LFK 1 from VOICE to DATA.

(d) Ensure CIPHER displayed below DATA (Display line between LFK 1 and LFK 3).

(e) Toggle LFK 3 from CLR to SEC.

(f) Toggle LFK 4 as required (optimum antenna selection may depend on flight altitude).

(2) HF data link.

(a) Allow 5 minutes for the radio to warm up after power-up or system initialization. The radio will receive but not transmit during this period.

(b) Select link frequency on appropriate COMM page and couple the radio.

(c) Select HF configuration control page.

(d) Toggle LFK 1 from VOICE to DATA.

(e) Ensure CIPHER displayed below DATA (Display line between LFK 1 and LFK 3).

(f) Toggle LFK from CLR to SEC.

(g) Toggle LFK 4 to appropriate sideband (USB, LSB, or BOTH).

Note

If the HF is tuned on the carrier deck, it should be retuned after takeoff, because of changes in antenna loading caused by the steel deck.

3. Modify the LINK PARAMETERS tableau through the LINK PRMTR option.

a. Enter OAC PU assignment.

b. Enter assigned TN pool.

c. Enter DLRP as briefed.

d. Enter STA mode as briefed.

(1) NCS configures the DTS to function as the net control station.

(2) PICKET configures the DTS to function as a picket station.

e. Enter RATE as briefed. This sets the data rate of the data terminal set.

(1) FAST is used for maximum data transfer rate.

(2) SLOW NORM provides a slower rate with improved performance during the presence of RF multipath.

(3) SLOW LONG provides the slower rate with improved performance during high noise conditions.

f. Enter ERROR DETECT. Select LABEL or CORRECT.

Note

CORRECT should only be used when RQ for other units is high.

g. Enter SYNC — As briefed. This sets the synchronous timing of the DTS.

(1) FAST and CONTINUOUS — Timing readjusts after receipt of each PU transmission.

(2) STORED — Timing is slaved to the timing standard of the NCS after receiving NCS transmission.

h. Enter FREQ STD.

(1) INT — data terminal set frequency standard is derived from its own 100 kHz oscillator.

(2) EXT — data terminal set frequency standard is derived from the 100 kHz oscillator of the HF radio set.

Note

EXT may be tried if a constant DTS fault occurs and data link transmissions are not normal. Ensure that the HF radio set is ON, select EXT and cycle NET ACTIVE. If the fault does not return and transmissions are normal, the DTS internal oscillator may be defective.

i. SELECT NET MODE — As briefed.

j. Establish filter requirements as necessary. Figures 5-4 and 5-5 delineate latitude/longitude and OAC filter parameters.

k. RESERVE REMOTE — As briefed.

l. Modify the PU list in the LINK PARAMETERS tableau.

(1) If OAC is the NCS, enter each PU to be interrogated in the PU list. If operating in the secure mode, OAC PU should be interspaced between each PU.

Note

- The S-3 operating as the NCS is capable of interrogating 10 PUs in the SECURE MODE and 20 PUs in the clear data mode.
- The S-3 operating as the NCS in the secure data mode will increase the net cycle time.

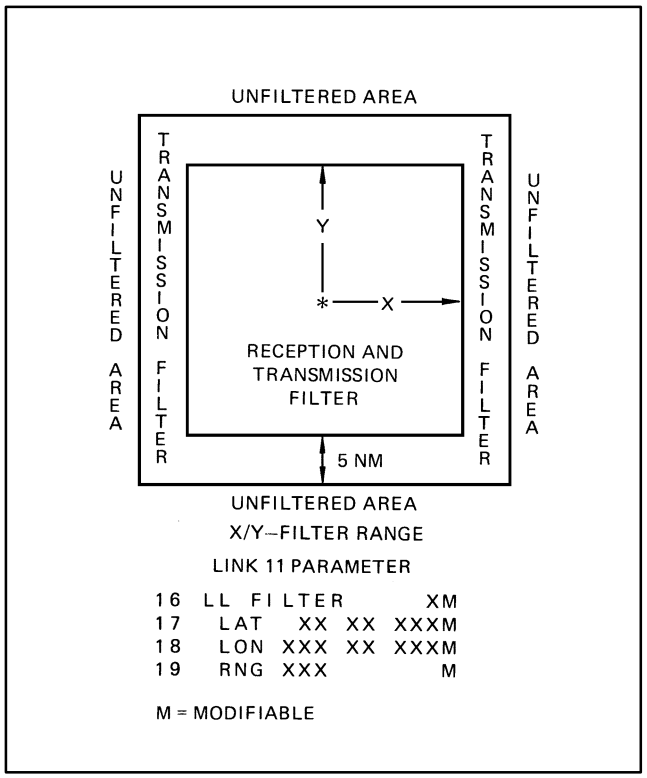

Figure 5-4. Latitude/Longitude Filter

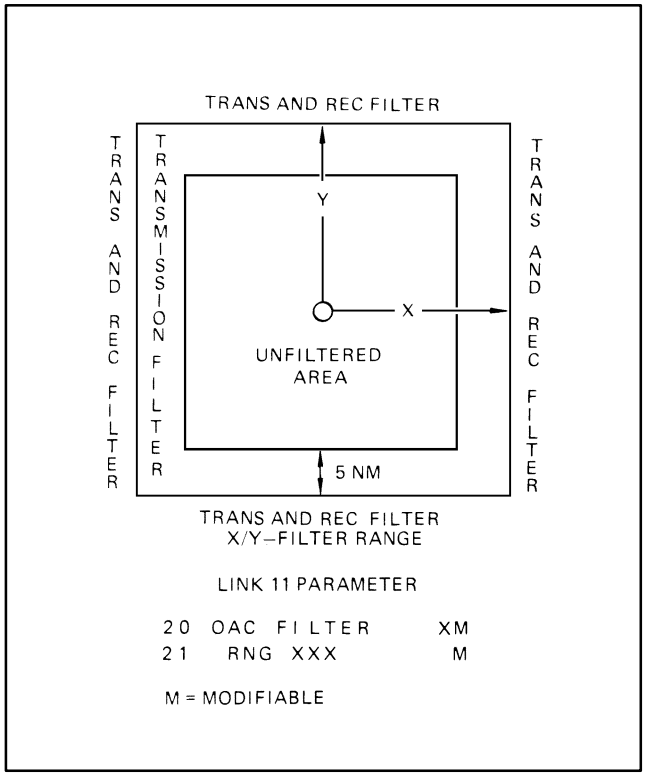

Figure 5-5. OAC Filter

(2) If OAC is PICKET, enter each PU currently assigned to the net in the PU list. For record keeping purposes only, enter the PU number of the NCS on line 1 of the LINK 11 PU LIST (PU) tableau via the SELECT LINE option.

(3) One line below each PU, enter its TN pool block (for record purposes only). These numbers have no effect on data reception or display.

Note

- The data link system will only display remote tracks originating from PUs entered in the PU list. Track number accountability is maintained even if a PU is not in the PU list.
- When link data are received from a PU that is not in the PU list, the alert PU ERROR 0 will be displayed.
- PUs can be deleted from the PU list by entering 0 for the PU number.

(4) If OWN AC is configured as a PICKET, place the data link system in DATA SLNCE.

(5) The data link system may now be placed in NET ACTIVE.

(6) Perform gridlock.

(7) Deselect DATA SLNCE (if selected).

Note

Modification of any link parameter (except TNPL and DLRP) while NET ACTIVE will momentarily deactivate NET ACTIVE to allow for a DTS update.

5.5.2 Own Aircraft (OAC Filter). A position filter that provides the capability to inhibit the display and transmission at all stations, of eligible remote information outside a square of a specified size centered on and moving with own aircraft.

5.5.3 Latitude/Longitude Filter (LAT/LONG/ Filter). A position filter that provides the capability to inhibit the display and transmission at all stations of eligible information within a square of specified size centered at a geographic position.

PART V

Nonacoustic Sensors

Chapter 6 — Nonacoustic Sensors

CHAPTER 6

Nonacoustic Sensors

6.1 FLIR SYSTEM

6.1.1 Introduction. The FLIR is a passive detection system used primarily for recognition and identification of surface ships, submarines, and submarine wakes. Secondary functions include target verification, weapon delivery observation, and navigation landmark identification.

The FLIR system senses objects by receiving infrared radiation and converting the frequency differences into a real time video presentation. The FLIR relies on infrared radiation to see in total darkness, through haze, smoke, and dust. Objects that appear identical to the naked eye create many levels of brightness and contrast in the infrared system.

A block diagram of the FLIR system is shown in Figure 6-1.

6.1.2 System Components. The FLIR System components are listed in Figure 6-2.

6.1.2.1 Sensor/Turret Assembly. The retractable sensor/turret assembly is located in the forward left electronics bay. The turret is capable of 200° rotation left or right from the aircraft centerline for a total one-way rotation of 400°. The infrared sensor is gimbaled inside the turret and operates between 0 and –84° elevation (see Figure 6-3). The turret is capable of automatically slewing 360° to the left or to the right from a limit switch when under automatic or manual (trackball) control. For example, when tracking a target clockwise from 0°, the turret will hit the limit switch at 200°, the subprogram will command the turret to turn counterclockwise 360° in 6 seconds and orient itself to the original LOS position when in autotrack (AUTO TRK), or return trackball control to the operator when in manual mode.

Note

An error in the altitude readout of the NAV PARAMETERS tableau will result in FLIR tracking errors.

6.1.2.2 Control and Servo Electronics Unit. Circuit breakers are located on the front of the box for elevation power, azimuth power, and logic power.

6.1.2.3 Power Supply — Video Converter. Two toggle switch circuit breakers are located on the front of the power supply in the left internal bay.

6.1.3 Off-Line Controls and Indicators. In addition to the normal CRT off-line controls at the COTAC, SENSO, and TACCO stations (see Figures 1-20 and 1-21), the COTAC is equipped with an advisory light, and a turret retract switch.

The COTAC advisory panel (FO-2) FLIR EXTEND legend lights green when the turret is fully extended. During both on and off-line operations, the advisory light extinguishes when the turret fully retracts and the compartment door is closed. In the event of program failure, the FLIR turret may be retracted off-line by using the FLIR RETRACT switch located on the COTAC throttle panel.

Note

- The FLIR turret may not retract if the failure is internal hardware related.
- Use of the FLIR in rain should be minimized in order to avoid any possible damage to the lens. Operations with the FLIR extended should not exceed approximately 3 minutes in moderate icing conditions.

Both on-line and off-line retraction methods retract the turret to the stow position (90° azimuth and 0° elevation), raise the turret, and close the compartment door.

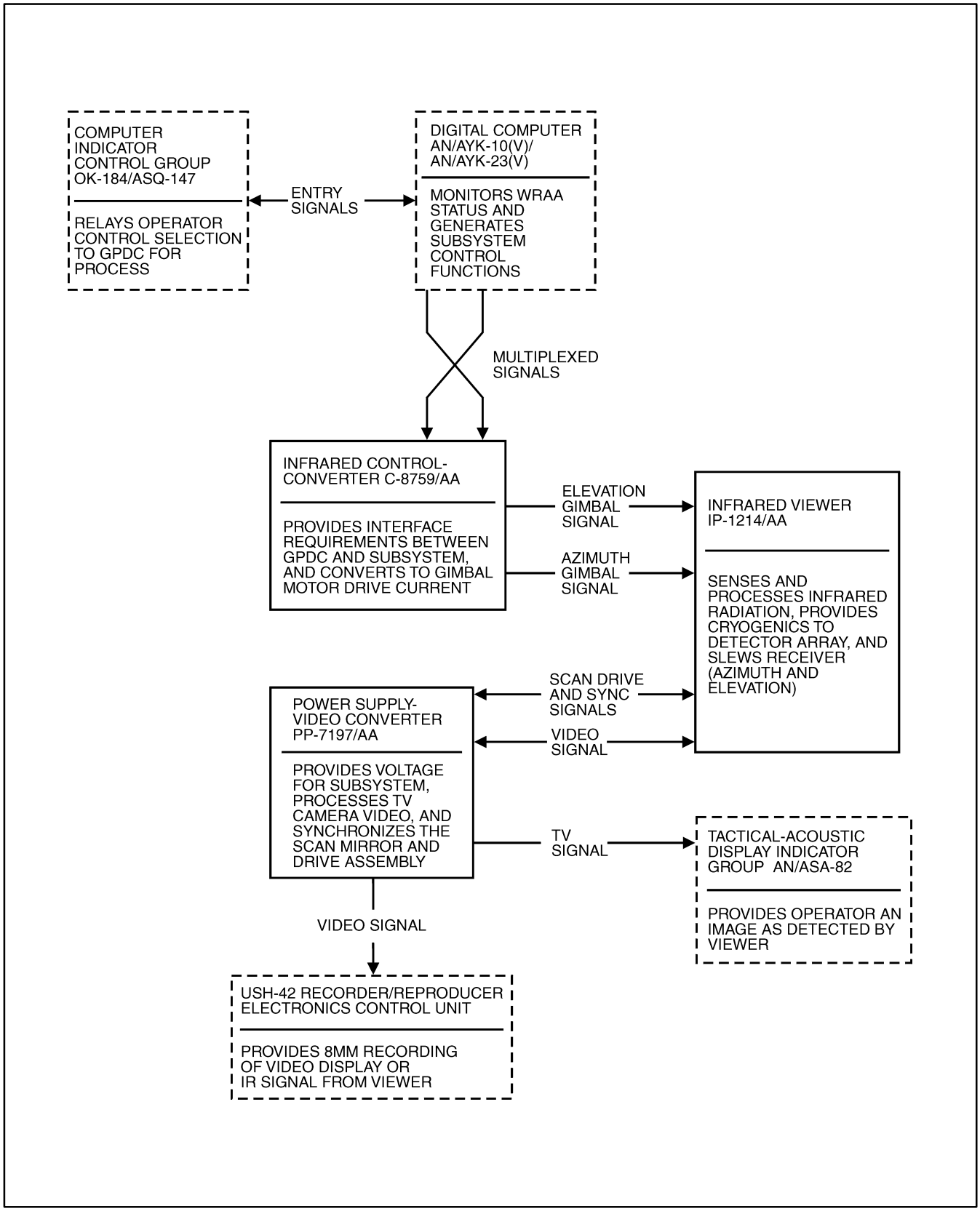

Figure 6-1. FLIR System Block Diagram

DESIGNATION	NOMENCLATURE	COMMON TERMINOLOGY	LOCATION
IP-1214/AA	Viewer Infrared	Sensor/Turret Assembly	Left forward external bay
C-8759A/AA	Control-Converter	Control and Servo Electronics	Left internal bay
PP-7197A/AA	Power Supply-Video Converter	Power Supply-Video Converter	Left internal bay

Figure 6-2. OR-89C/AA FLIR System Components

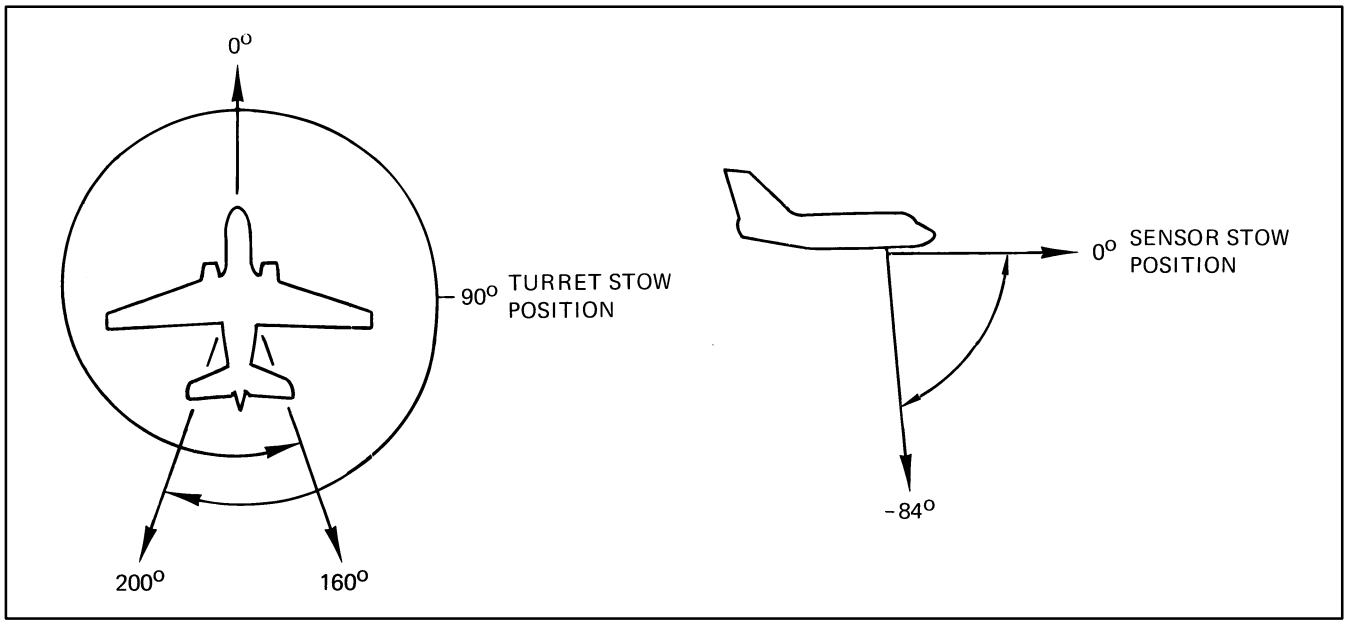

Figure 6-3. Turret/Sensor Stow Positions and Travel Limits

Note

UHF radios should transmit on an upper antenna while utilizing FLIR. When FLIR faces the bottom UHF antenna while that antenna is being used for voice communications, the UHF interferes with FLIR video in all transmit modes.

The FLIR video display on the MPD is a television image converted from an infrared image. To obtain the best possible picture it is necessary for each operator to adjust the television brightness and contrast immediately after the FLIR Display (DSPL) is activated at any station. The off-line controls govern the nine shades of gray visible in the half-inch wide bank displayed across the bottom of the television picture (see Figure 6-4).

6.1.4 Display. The FLIR display (see Figure 6-4) is a trackball-controlled video presentation available on the COTAC, SENSO, and TACCO MPDs. The FLIR subprogram does not display peripheral readouts or a tableau.

Peripheral readouts are replaced by six annotations located below the television picture. The annotations are:

1. Turret true bearing
2. Ground range in yards/nm
3. Turret relative bearing from the aircraft
4. Sensor angle of elevation
5. Infrared brightness level
6. Infrared contrast level.

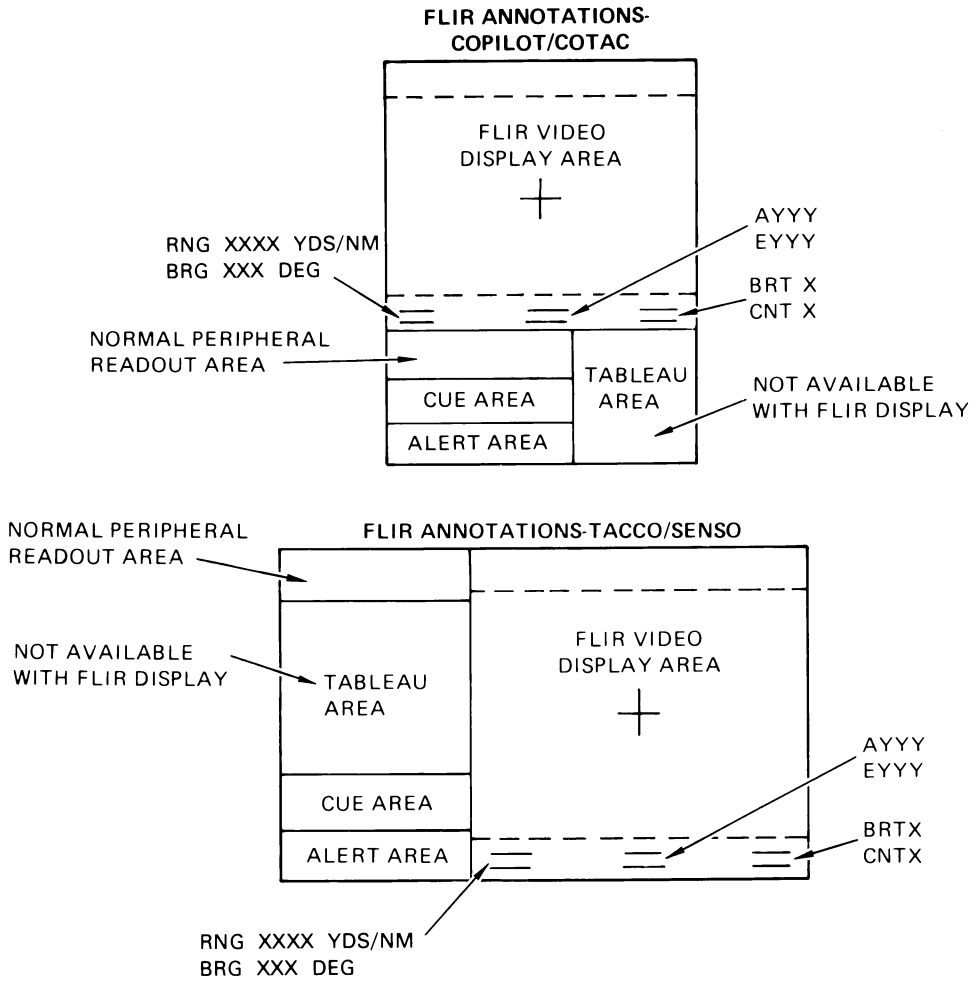

ANNOTATION	DESCRIPTION	REMARKS
RNG	GROUND RANGE	XXXXX REPRESENTS 0 THRU 64000
BRG	TURRET TRUE BEARING	XXX REPRESENTS 0° THRU 359°
A	TURRET RELATIVE BEARING	YYY REPRESENTS 0° THRU 359°
E	ANGLE OF ELEVATION	YYY REPRESENTS 0° THRU -84°
BRT	BRIGHTNESS	X REPRESENTS 1, 2, 3 OR 4
CNT	CONTRAST	X REPRESENTS 1, 2, 3 OR 4

Figure 6-4. FLIR Display

Turret true bearing, ground range, turret relative bearing, and sensor angle are constantly updated by the GPDC in response to aircraft maneuvers and trackball operation. The infrared brightness and contrast levels are displayed when the decision cue SEL VIDEO ADJUST appears in response to pressing of the BRT/CNTRST (brightness/contrast) switch. Four levels of brightness and four levels of contrast are available to the controlling operator to obtain the optimum infrared image.

The upper section of the display area is dark.

Crosshairs measuring 3/8-inch by 3/8-inch are displayed in the center of the television picture to aid in LOS positioning.

6.1.5 On-Line Control Functions. The FLIR matrix option select function group (See FO-5 and FO-8) consists of 10 operator controlled functions. The subprogram recognizes only the first operator to activate the display (DSPL) switch as the controlling operator. FLIR LOS azimuth and elevation are changed with movement of the operator's trackball. A noncontrolling operator may monitor the FLIR display but cannot control the turret or any operating modes.

The COTAC display control IR switch and the TACCO matrix A FLIR switch activates the matrix A FLIR option select switches.

6.1.6 FLIR Matrix

TACCO
SENSO
COTAC

FLIR

PURPOSE:

Displays option select function legends associated with FLIR.

PREREQUISITE:

None.

Note

- The matrix option select is IR at the COTAC station.
- IR at COTAC station does not light amber when pressed. The legend goes black and the matrix C ACK CNTCT legend appears.

PROCEDURE:

1. Press FLIR (lights amber).

COOL	EXTEND	SRCH/ ALGN	NEG IMAGE	AUTO TRK
ACQ TGT	DSPL	NAR FIELD	BRT/ CNTRST	ENTER FIX

DEACTIVATION:

1. FLIR matrix is deactivated when another matrix A select switch is pressed at the TACCO/SENSO station, or any matrix is activated at the COTAC station.

2. Deactivation results:

   a. FLIR option select function legends are replaced by option select function legends associated with another matrix A select.

   b. FLIR matrix switch legend changes from amber to green.

6.1.6.1 COOL Option

TACCO
SENSO
COTAC

COOL

FLIR

PURPOSE:

Provides on/off control of IR detector cryogenic cooler and cooler timer. Activation and deactivation of the COOL switch starts and stops the sequence of FLIR functions.

PREREQUISITE:

1. FLIR/IR matrix is active.

PROCEDURE:

1. Press COOL (lights amber).

Note

IR detectors normally take 12 minutes to achieve cool down. If the cool down time exceeds 20 minutes, the cooler is considered to have failed.

a. When cool down of the infrared detectors has been achieved, the following alert appears:

ZZZZ FLIR COOLED

(1) Cryogenic cooler has cooled to the proper temperature.

(2) EXTEND function lights green.

b. If cool down of infrared detectors is not achieved in 20 minutes, the following alert appears:

ZZZZ FLIR COOL DEF

(1) EXTEND function remains black.

(2) Activate the REINIT/RNZ matrix FLIR option select (see REINIT/RNZ function). If failure is due to software, FLIR cool down may be restarted by pressing COOL.

DEACTIVATION:

1. COOL is deactivated if pressed when amber.

2. Deactivation results:

a. EXTEND switch becomes black.

b. COOL switch changes to green.

c. Cryogenic cooler for IR detectors turns off.

d. All other available or active FLIR options become unavailable.

6.1.6.2 EXTEND Option

TACCO
SENSO
COTAC

FLIR

PURPOSE:

Extends or retracts the FLIR sensor turret assembly.

PREREQUISITE:

1. COOL function is completed.

PROCEDURE:

1. To extend the turret assembly, press EXTEND (lights amber).

a. If the turret assembly fully extends within 60 seconds, the following legend lights green on the COTAC advisory panel:

FLIR EXTEND

(1) The following functions light green:

(a) DSPL

(b) NAR FIELD

(c) NEG IMAGE.

(2) The cool function becomes unavailable.

b. If the turret assembly fails to extend within 60 seconds, the following alert appears:

ZZZZ FLIR EX-R DEF

(1) Turret assembly extension is incomplete.

(2) Function will not complete.

(3) Activate the REINIT/RNZ matrix FLIR option select (see REINIT/RNZ function). If failure is due to software, turret extension may be accomplished after the COOL function is complete.

2. To retract the turret assembly, press EXTEND (lights green).

   a. If the turret assembly fully retracts within 60 seconds, the following alert appears:

      ZZZZ FLIR RETRACTED

      (1) The following functions become unavailable:

         (a) DSPL

         (b) NAR FIELD

         (c) NEG IMAGE.

      (2) The following function lights amber:

         (a) COOL.

   b. If the turret assembly fails to retract within 60 seconds, the following alert appears:

      ZZZZ FLIR EX-R DEF

      (1) Turret assembly retraction is incomplete.

      (2) Function will not complete.

      (3) Press the EXTEND switch again.

      (4) If the turret fails to retract, activate the REINIT/RNZ matrix FLIR option and attempt retraction.

      (5) If the turret fails to retract, set the FLIR RETRACT switch to RETRACT.

DEACTIVATION:

1. EXTEND is deactivated upon completion of retraction procedures.

2. Deactivation results:

   a. Turret assembly is retracted.

   b. EXTEND switch lights green.

   c. FLIR EXTEND advisory light goes out.

   d. The following functions become unavailable:

      (1) DSPL

      (2) NAR FIELD

      (3) NEG IMAGE.

   e. The following function lights amber:

      (1) COOL.

   f. The following alert appears:

      ZZZZ FLIR RETRACTED

6.1.6.3 SRCH/ALGN Option

TACCO
SENSO
COTAC

FLIR

PURPOSE:

Activates an automatic slewing (SEARCH) mode for FLIR or activates the FLIR Alignment function to provide a software alignment of the FLIR turret.

PREREQUISITES:

1. FLIR/IR Matrix active.

2. DSPL option select is active.

3. FLIR ACQ Target is not active.

PROCEDURE:

1. Press SRCH/ALGN (light amber).

Note

AUTO TRK function automatically deactivates, if active, when the SEARCH/ALGN function is activated.

   a. The following cue appears:

      SEL SRCH-ALGN
      1 SEARCH
      2 ALIGN
      3 DELETE BIAS

2. Press selection of 1 through 3 on the keyset and press ENTER to select the SEARCH function, the ALIGN function, or to delete a currently applied FLIR bias.

   a. If 1 is selected, processing continues with step 7 below.

   b. If 2 is selected, the FLIR turret is commanded to the 167° azimuth and –004° elevation to view the SRS antenna. Continue at step 3 below.

   c. If 3 is selected, any previous FLIR bias is deleted.

      (1) If 3 is selected and no previous bias is present, the INVALID ENTRY alert is displayed and the SEL SRCH-ALGN cue is redisplayed.

3. The following cue appears:

   HOOK SRS ANTENNA

4. Using the trackball center the Pierce Point (cross hairs) over the bottom tip of the SRS antenna and depress HOOK and ENTER.

   a. The program calculates a delta azimuth and elevation based on the difference between the commanded turret position and the repositioning required to place the pierce point on the SRS antenna.

   b. The FLIR turret is automatically commanded to 173° azimuth and –002° elevation to view the communications antenna. The FLIR turret positioned over the bottom tip of the communications antenna is indicative of a valid alignment/bias.

5. The following cue appears:

   FLIR BIAS XXX EL
   YYY AZ
   1 ACCEPT
   2 REJECT

6. Press 1 or 2 to accept or reject the calculated FLIR bias.

   a. If 1 is selected, the FLIR bias will be applied to all subsequent FLIR Azimuths and Elevations.

   b. If 2 is selected, no FLIR bias will be applied and the ALIGN function is terminated.

Note

- The system does not distinguish between a zero bias caused by an aligned FLIR or no alignment completed.
- Wide Field of View (WFOV) should be used to perform the FLIR alignment.

7. The following cue appears:

   SEL SECTOR — DEGS
   1 30
   2 60
   3 120
   4 160

   OPNTL

Note

The current values of sector width and slew rate are displayed in the lower right corner of the FLIR DISPLAY whenever SEL SECTOR or SEL RATE cues are displayed.

8. Press selection of 1 through 4 on the keyset and press ENTER to obtain the desired sector width, or press SKIP CUE or TERM CUE SEQ if current values or computer selected values are desired.

   a. If SKIP CUE is pressed in response to the cue, the current sector width is utilized. If there is no previous entry, the sector width is set to 60°.

   b. If TERM CUE SEQ is pressed in response to the cue, the current values for both sector width and slew rate are used. If there are no previous entries, the sector width is set to 60° and the slew rate is set to 4.5°/second. Proceed to step 11.

9. If response to the SEL SECTOR cue was 1 through 4 or SKIP CUE, the following cue appears:

SEL RATE
1 MIN
2
3
4 MAX

OPTNL

Note

An operator entry of 1 through 4 causes the FLIR to slew through the selected sector at the following rates:

1 = 1.5°/second
2 = 3.0°/second
3 = 4.5°/second
4 = 6.0°/second

10. Press selection of 1 through 4 on the keyset and press ENTER to obtain the desired slew rate, or press SKIP CUE or TERM CUE SEQ if the current value or a computer selected value is desired.

    a. If SKIP CUE or TERM CUE SEQ is pressed in response to the cue, the current slew rate is utilized. If there is no previous entry, the slew rate is set to 4.5°/second.

11. The FLIR is commanded to slew through the selected width sector at the selected rate.

    a. The sector is centered about the current LOS azimuth or the closest allowable azimuth. For example, a 30° sector selection is centered about the hook ±15°.

    b. The trackball may be used to modify the LOS azimuth and elevation of the selected sector. The allowable azimuth LOS angle is between ±90 from the nose of the aircraft. The allowable elevation angle is between 0° and –60°.

    c. The A and E readouts on the display indicate the azimuth and elevation of the LOS of the center of the sector (see Figure 6-4). BRG and RNG readouts on the display are updated to the current value every 1 second.

Note

With the SEARCH function active, FLIR turret elevation is referenced to maintain a constant ground range while slewing through a sector. The ground range will remain constant when altitude and attitude change.

DEACTIVATION:

1. SRCH/ALGN is deactivated when one of the following occurs:

    a. SRCH/ALGN is pressed when amber.

    b. AUTO TRK is activated.

    c. DSPL is deactivated.

2. Deactivation results:

    a. SRCH/ALGN lights green (becomes unavailable if DSPL was deactivated).

    b. Slewing stops immediately. If AUTO TRK was activated, tracking commences immediately on a fixed point of the Earth's surface at the center of the FLIR display.

    c. The A and E readouts on the display indicate the LOS representing the current LOS of the center of the FLIR display.

6.1.6.4 NEG IMAGE Option

TACCO
SENSO
COTAC

NEG IMAGE

FLIR

PURPOSE:

Displays FLIR video as hot targets black on a white background.

PREREQUISITES:

1. FLIR/IR matrix is active.
2. Turret assembly is extended.

PROCEDURE:

1. Press NEG IMAGE (lights amber).

   a. FLIR video displays hot targets as black on a light background (negative polarity).

Note

Normal FLIR video is positive polarity displaying hot targets white. Activation of NEG IMAGE displays hot targets black, which aids in target feature recognition.

DEACTIVATION:

1. NEG IMAGE is deactivated when one of the following occurs:

   a. NEG IMAGE is pressed when amber.

   b. EXTEND function is deactivated.

2. Deactivation results:

   a. NEG IMAGE lights green.

      (1) NEG IMAGE changes to black if EXTEND function is deactivated.

   b. FLIR video changes to positive polarity.

      (1) Hot targets are displayed as white on a dark background.

6.1.6.5 AUTO TRK Option

TACCO
SENSO
COTAC

FLIR

PURPOSE:

Provides GPDC-controlled tracking of any position in the center of the FLIR display, allowing the operator to perform other tasks.

PREREQUISITES:

1. FLIR/IR matrix is active.

2. DSPL option select is active.

PROCEDURE:

1. Press AUTO TRK (lights amber).

   a. Turret azimuth and elevation are under GPDC control and maintain the center of the display at a fixed point on the Earth's surface.

Note

- The operator can manually override AUTO TRK with the trackball to change or correct the position being tracked without deactivating the AUTO TRK function.

- When AUTO TRK is active, the ENTER FIX function is available for displaying and recording target fixes on the TAC PLOT.

- Error in the altitude readout in the NAV PARAMETERS tableau will directly affect the accuracy of AUTO TRK.

2. Automatic AUTO TRK activation is accomplished when the following occurs:

   a. HOOK VERIFY is pressed in tactical, radar, or ESM plot mode at any station.

   b. DSPL is pressed.

Note

FLIR LOS automatically slews to the geographic position of the hooked point.

DEACTIVATION:

1. AUTO TRK is deactivated when one of the following occurs:

   a. AUTO TRK is pressed when amber.

   b. DSPL function is deactivated.

2. Deactivation results:

   a. AUTO TRK lights green.

   b. Sensor and turret elevation/angle are under trackball control.

   c. ENTER FIX function is unavailable.

6.1.6.6 ACQ TGT Option

TACCO
SENSO
COTAC

ACQ TGT

FLIR

PURPOSE:

Allows FLIR to be used to designate real time targeting for weapon FTP activation.

PREREQUISITES:

1. FLIR/IR Matrix active.
2. COOL function is complete.
3. Turret is extended.
4. Non-forward firing weapon selected and ready for release (ACP in AUTO) or weapon station with dropable store selected (ACP in MAN).

PROCEDURE:

1. Press ACQ TGT (lights amber). SRCH/ALIGN is black lit.
   a. If FLIR alignment has not been previously performed. The alert "ALIGN FLIR" is displayed.
   b. If multiple weapons were selected, the ENT BEARING cue is displayed.
   c. WPN FTP lights amber. A Weapon Fly-to-Point with final radial is placed at the FLIR LOS intersection along with the A/C symbol on the FLIR display. (Assume a 2-nm display scale. The vertical axis is the FLIR turret true bearing.)
   d. The Weapon Fly-to-Point is updated at a 200 ms rate until the A/C is within 20 seconds of capture, the update rate is then increased to 50 ms.
   e. The Weapon Fly-to-Point update is inhibited when turret elevation is greater than –0.5° during turret movement and turret acceleration. Whenever the LOS calculation is inhibited and the Acquire Target function is not active, the ACQ TGT keyset is blacklit and not available.

WARNING

Once a WFTP is entered via the ACQ TGT function, deselecting ACQ TGT will cause the WFTP to disappear from the FLIR display only. The WFTP will remain in the system giving the operator the false impression that the WFTP has been destroyed, causing potential for accidental release of the selected store.

DEACTIVATION:

1. ACQ TGT is deactivated when one of the following occurs:
   a. Weapon release.
   b. Upon redepression of ACQ TGT when it is amber lit.
   c. Deactivation of the controlling operator's display switch. (DSPL)
   d. Deactivation of the Active WPN FTP.
2. Deactivation results:
   a. If displayed, the Weapon Splash-Point is displayed for 10 seconds, then removed on the FLIR display.
   b. A/C symbol and Weapon Fly-to-Point are removed 10 seconds after weapon deployment (if deactivation is the result of weapon deployment).
   c. ACQ TGT is lit green or black as applicable.
   d. SRCH/ALGN is green lit.
   e. WPN FTP is blacklit.

WARNING

When using the FLIR ACQ TGT function for WFTP placement, extreme care must be exercised to ensure that the target elevation entered in the Kill Stores tableau (Index 13) is zero, and that the system altitude displayed in the Navigation Parameters tableau (Index 5) represents actual aircraft height above target (ft AGL). Incorrect system altitude or failure to input a zero target elevation may cause improper WFTP placement resulting in excessive target miss distances.

Note

The FLIR ACQ TARGET function utilizes the FLIR Line-of-Sight (LOS) depression angle, displayed system altitude in the Navigation Parameters tableau (Index 5), and the displayed target elevation in the Kill Stores tableau (Index 13) to aid in calculating WFTP placement. If displayed system altitude represents actual height-above-target (ft AGL) and the target elevation displayed in the Kill Stores tableau is zero, WFTP placement will correspond to the operator-designated FLIR target. However, if the displayed system altitude is referenced to MSL, then WFTP placement assumes the FLIR designated target is located at sea level and the target elevation displayed in the Kill Stores tableau is applied to the geographic position at which the FLIR LOS intersects the MSL reference line. Therefore, if the operator is designating a FLIR target with a target elevation greater than sea level, the system-calculated WFTP and weapon splash point will not correspond to the operator-intended weapon splash point. (See Figure 6-5.)

6.1.6.7 DSPL Option

TACCO
SENSO
COTAC

DSPL

FLIR

PURPOSE:

Displays FLIR video on the MPD.

PREREQUISITES:

1. FLIR/IR matrix is active.
2. COOL function is completed.
3. Turret assembly is extended.

PROCEDURE:

1. Press DSPL (lights amber).

   a. FLIR video is displayed on the MPD.

Note

Initial FLIR LOS is 000° relative, 6,000 yards, or the geographic position of the previously hooked point.

   b. MPD displays azimuth, elevation, true bearing, and ground range readouts of the FLIR sensor LOS.

      (1) Azimuth is displayed at the lower center of the MPD display area. Azimuth readout (0 to 359°) represents LOS in relation to the aircraft centerline. Zero degrees is pointing forward. Azimuth readout is preceded by the letter A as shown below:

      AXXX

      (2) Elevation in degrees (0 to –84°) of FLIR LOS is displayed at the bottom center of MPD display area, immediately below the azimuth readout. Elevation represents LOS in relation to the aircraft longitudinal axis (see Figure 6-4). Elevation readout is preceded by the letter E as shown below with the azimuth readout:

      AXXX
      E-XX

      (3) Horizontal range in yards is displayed in the lower left corner of the MPD display area. Range readout is shown below.

      RNG XXXXX YDS

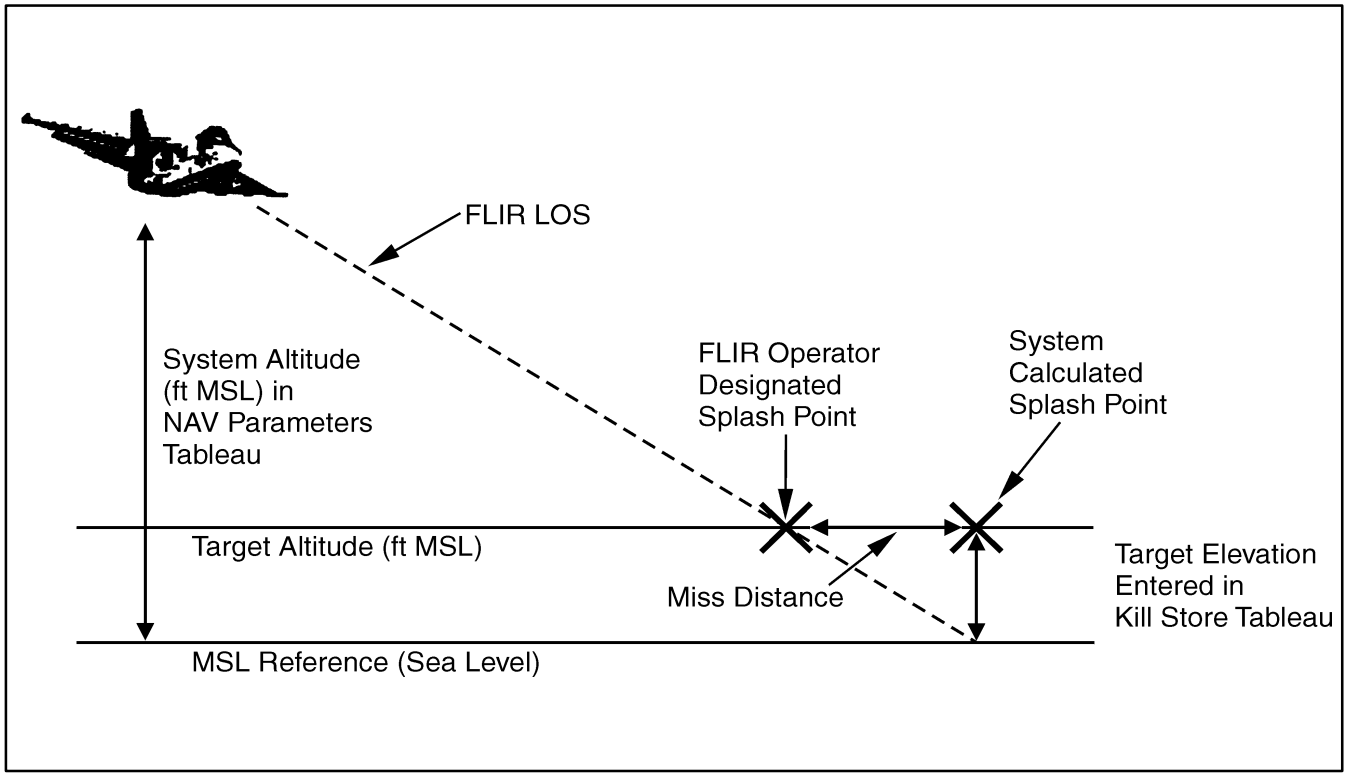

Figure 6-5. FLIR Bombing

(4) True bearing, in degrees, of the FLIR LOS is displayed in the lower left corner of the MPD display area immediately below the range readout. True bearing readout is shown below with the range readout.

RNG XXXXX YDS
BRG XXX DEG

(5) Crosshairs, consisting of two 3/8-inch vectors (horizontal and vertical), indicate the center of the FLIR LOS.

Note

Azimuth, elevation, bearing, and range readouts are updated at 1-second intervals.

2. Station with FLIR control has the following FLIR functions active or available:

a. EXTENDED and DSPL are amber.

b. NAR FIELD, NEG IMAGE, BRT/CNTRST, AUTO TRK, and SRCH/ALGN are green.

Note

First station to activate DSPL has FLIR control. All stations subsequently activating DSPL only have the capability of viewing FLIR video without control.

3. If this is the first activation of DSPL, the following cue is displayed:

ALIGN FLIR
1 YES
2 NO

OPNTL

a. Respond to the cue:

(1) If NO is selected, no further action is required.

(2) If YES is selected, the FLIR turret is commanded to the 167° azimuth and –004° elevation to view the SRS antenna.

4. The following cue appears:

HOOK SRS ANTENNA

5. Using the trackball, center the Pierce Point over the SRS antenna and depress HOOK and ENTER.

   a. The program calculates a delta azimuth and elevation based on the difference between the commanded turret position and the repositioning required to place the Pierce Point on the SRS antenna.

   b. The FLIR turret is automatically commanded to 173° azimuth and –002° elevation to view the communications antenna. The FLIR turret positioned over the bottom tip of the communications antenna is indicative of a valid alignment/bias.

6. The following cue appears:

   FLIR BIAS XXXEL
   YYYAZ
   1 ACCEPT
   2 REJECT

7. Press 1 or 2 to accept or reject the calculated FLIR bias.

   a. If 1 is selected the FLIR bias will be applied to all subsequent FLIR azimuths and elevations.

   b. If 2 if selected, no FLIR bias will be applied and the ALIGN function is terminated.

8. Stations without FLIR control have the DSPL switch green. All other FLIR functions are black.

9. Manual track is initiated at the station with FLIR control.

   a. LOS azimuth and elevation change with movement of the trackball.

      (1) Turret gimbal limits are ±200° from the aircraft centerline for azimuth, and 0 to –84° for elevation.

DEACTIVATION:

1. DSPL is deactivated when one of the following occurs:

   a. DSPL is pressed when amber.

   b. Turret is retracted by the controlling operator (see EXTEND function).

2. Deactivation results:

   a. If DSPL was pressed at the controlling station:

      (1) DSPL lights green at all stations.

      (2) FLIR video is removed from the MPD at all stations.

      (3) BRT/CNTRST and AUTO TRK functions change to black at all stations.

      (4) The following FLIR functions remain green or amber and their switch lighting is shown at all stations in FLIR mode:

         (a) EXTEND (amber)

         (b) DSPL (green)

         (c) NAR FIELD (green)

         (d) NEG IMAGE (green).

   b. If DSPL is pressed at a noncontrolling station:

      (1) DSPL lights green.

      (2) FLIR video is removed from the MPD.

      (3) No other stations are affected.

6.1.6.8 NAR FIELD Option

TACCO
SENSO
COTAC

FLIR

PURPOSE:

Changes the focal length of the detector lens, providing a closeup of the viewing area.

PREREQUISITES:

1. FLIR/IR matrix active.

2. Turret assembly extended.

PROCEDURE:

1. Press NAR FIELD (lights amber).

   a. FLIR display FOV is changed from wide to narrow.

      (1) Narrow FOV is a 3:1 reduction of the wide FOV. Wide FOV = 15° vertical by 20° horizontal. Narrow FOV = 5° vertical by 6.67° horizontal.

DEACTIVATION:

1. NAR FIELD is deactivated when one of the following occurs:

   a. NAR FIELD is pressed when amber.

   b. EXTEND function is deactivated.

2. Deactivation results:

   a. NAR FIELD lights green.

      (1) NAR FIELD changes to black if EXTEND function is deactivated.

   b. FLIR display FOV is changed from narrow to wide.

6.1.6.9 BRT/CNTRST Option

TACCO
SENSO
COTAC

FLIR

PURPOSE:

Provides the on-line capability to adjust brightness and contrast levels in the FLIR detector.

PREREQUISITE:

1. FLIR/IR matrix is active.

PROCEDURE:

1. Press BRT/CNTRST (lights amber).

   a. The following cue appears:

      SEL VIDEO ADJUST
      1 INCR BRT
      2 DECR BRT
      3 INCR CNTRST
      4 DECR CNTRST

   b. The BRT and CNTRST annotations appear below the FLIR display.

2. Respond to the cue.

Note

Only one adjustment can be made. Repeat or additional adjustments can be made after completion of each adjustment.

   a. Press number 1 on the keyset to increase brightness.

   b. Press number 2 on the keyset to decrease brightness.

   c. Press number 3 on the keyset to increase contrast.

   d. Press number 4 on the keyset to decrease contrast.

Note

Brightness and contrast each have four levels of adjustment. Once the limit of adjustment has been reached (highest or lowest), additional adjustment attempts beyond that limit will be ignored.

3. Press ENTER.

   a. Video adjusts in response to cue selection.

4. Repeat steps 2 and 3 until the desired video adjustment is reached.

Note

SEL VIDEO ADJUST cue and annotations remain displayed until BRT/CNTRST is deactivated. This allows the operator to repeatedly select a brightness or contrast adjustment until satisfactory video adjustment is made.

DEACTIVATION:

1. BRT/CNTRST is deactivated when one of the following occurs:

   a. BRT/CNTRST is pressed when amber.

   b. DSPL or EXTEND function is deactivated.

2. Deactivation results:

   a. BRT/CNTRST changes from amber to green.

      (1) BRT/CNTRST changes to black if DSPL is deactivated.

   b. SEL VIDEO ADJUST cue is removed from the MPD.

      (1) Current status of brightness and contrast of FLIR video is maintained.

6.1.6.10 ENTER FIX Option

TACCO
SENSO
COTAC

ENTER FIX

FLIR

PURPOSE:

Displays target fixes on the tactical plot and records all fix information in the data extract. The recorded data includes the event number, time, track number, latitude and longitude, classification, identification, and FOV.

PREREQUISITES:

1. FLIR/IR matrix is active.
2. AUTO TRK is active.

PROCEDURE:

1. Press ENTER FIX (lights amber).

   a. The following cue appears:

```
ENT CNTCT NUM
---
XXX
OPTNL
```

   - Where the default selection (XXX) is the next available number.
   - Valid entries are 100–356.

Note

- If the operator enters a Contact Number that matches that of an existing Datum, the entry is not accepted and the INVALID ENTRY alert appears; the ENT CNTCT NUM cue is redisplayed.
- If the entered Contact Number matches that associated with another fix/track, then the hooked item is assigned the Category and Identity of the associated fix/track.

2. Press ENTER.

   a. The following cue appears:

```
SEL CATEGORY
1 SURF
2 SUB
3 AIR
4 LAND
5 SURF UNK +
```

   The default option is Surface Unknown.

3. Respond to the SEL CATEGORY cue.

   If the operator selects 5 (SURF-UNKNOWN—the default category/identity), proceed to step 6.

4. Press ENTER.

   a. The following cue appears:

```
SEL IDENTITY
1 FRIEND
2 HOSTILE
3 UNKNOWN +
```

   Where the optional selection is Unknown.

5. Respond to the IDENTITY cue.

6. Press ENTER.

   a. The FLIR fix symbol is displayed on the TAC PLOT at the same geographic position as the FLIR LOS on all the MPDs in the tactical plot

mode. The fix is then used to update a Generated Track with the same Contact Number if one exists and is removed from the display.

Note

Error in the altitude reported to the GPDC will directly affect the accuracy of the FLIR fixes.

DEACTIVATION:

1. ENTER FIX is deactivated when one of the following occurs:

   a. ENTER FIX is pressed when amber.

   b. SKIP or TERM CUE is pressed during the cueing sequence.

   c. Cue sequence is completed.

   d. Deactivation of AUTO TRK.

2. Deactivation results:

   a. ENTER FIX changes from amber to green, if deactivation occurs as a result of 1a, 1b, or 1c above.

   b. ENTER FIX changes from amber to black, if deactivation occurs as a result of 1d above.

   c. Fix symbology is presented on the MPDs.

6.1.7 FLIR Reinitialization. The FLIR may be reinitialized through the SYSTEM STATUS tableau, REINIT matrix, or REINIT SYSTEM option in PROGRAM CONTROL matrix.

The FLIR is commanded to the last known configuration when reinitialization occurs.

6.1.8 AN/USH-42 Mission Recorder/ Reproducer Set. The AN/USH-42 Mission recorder/Reproducer Set (MR/RS) provides the capability to record in-flight data from the OR-263 FLIR and APS-137 radar, as well as standard and non-standard digital annotation (see Figure 6-6). In aircraft with AFC-287 incorporated, the AN/USH-42 provides the additional capability of recording missile video (Maverick or SLAM-ER). The data are recorded on two Hi-8 mm video tape cassettes that may also be used for post-flight replay and analysis. ME or MP Hi-8 cassettes of 120 minute length may be used. The two tape transport units have separate controls and indicators. The MR/RS extracts course, latitude, longitude, time, altitude data from the GPS, and video source from the 15553B bus for recording and display on each video frame.

The MR/RS comprises the following equipment:

1. Remote Control and Advisory Panel (RCAP)

2. Recorder/reproducer electronics unit (R/REU)

3. Video switch assembly (VSA)

4. 1553B bus couplers (2).

The system provides self test capability through initiated BIT (IBIT) and background BIT (BGBIT) functions. IBIT is executed when the system is powered up or reset. BGBIT runs continuously during system operation. additionally, an external BIT (EBIT) function provides the capability to monitor video and audio during the recording process, and a Record Video/Audio Test function tests the electronics and tape heads of the transport, permitting verification of the video and audio record/ playback quality by recording gray bars and an audio tone on a selected channel.

6.1.8.1 AN/USH-42 Remote Control And Advisory Panel. Remote Control and Advisory Panel is located at the TACCO station and contains the necessary controls and indicators for operation of the mission recorder/reproducer system. The controls and indicators of the RCAP are functional when the OVERRIDE switch on the recorder/reproducer electronics unit is in the off (down) position. There are two separate sets of controls and indicators on the RCAP, one set for each channel of the recorder/reproducer electronics unit. Refer to Figure 6-7 for an explanation of RCAP controls and indicators.

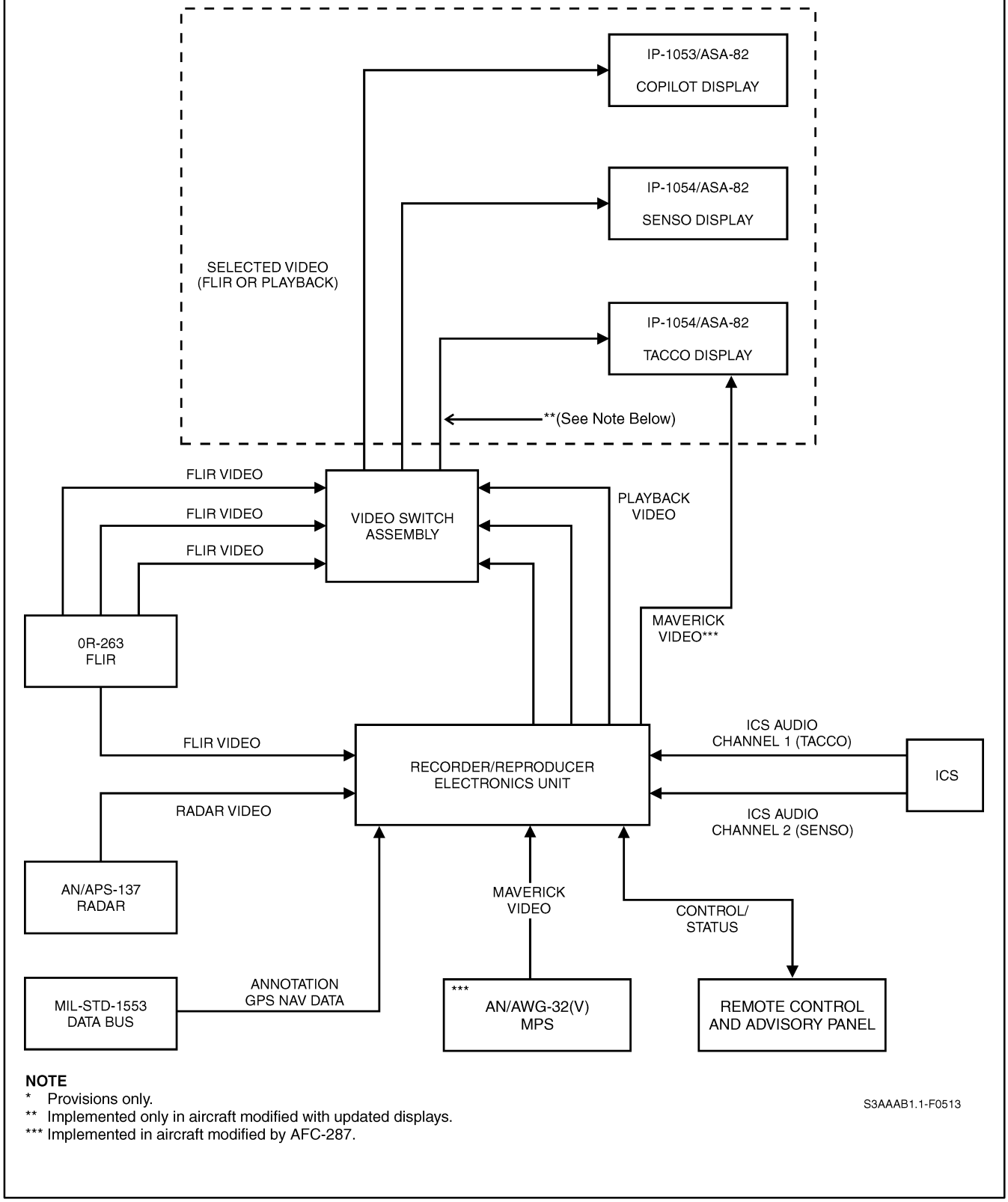

Figure 6-6. AN/USH-42 Mission Recorder/Reproducer Set

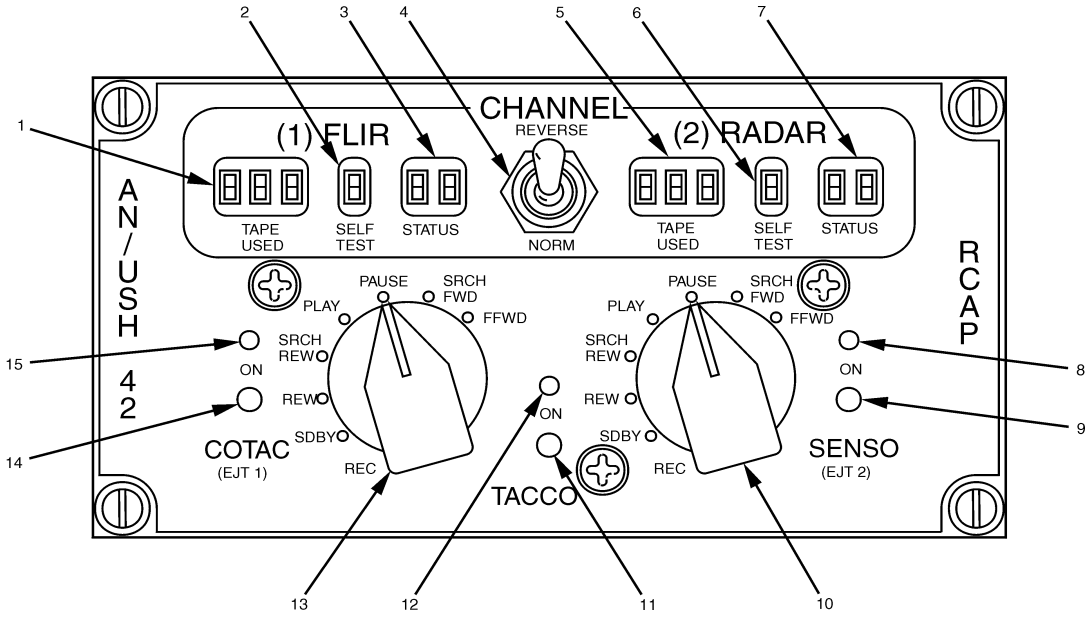

INDEX NO.	CONTROL/INDICATOR	FUNCTION
1	Channel 1 TAPE USED display	Displays channel 1 tape usage as: beginning of tape (BOT), minutes of tape used, or end of tape (EOT). DEW indicates a dew condition for the MR/RS.
2	Channel 1 SELF TEST display	Displays results of channel 1 self-test: E — electronics unit (R/REU) self-test failure. G — R/REU and RCAP pass self-test, system in ground mode. P — R/REU and RCAP pass self-test, input video present. R — RCAP self-test failure. T — Recording inhibited by tab on tape cassette. V — R/REU and RCAP pass self-test, input video not present. E/R (alternating) — 1553 data bus failure.

Figure 6-7. AN/USH-42 Remote Control and Advisory Panel (Sheet 1 of 3)

Note

If the play, search forward, search reverse, or pause function is selected on one of the two channels while the MR/RS is in the airborne mode (GROUND enable switch set to off (down) on the R/REU local control panel), these functions are not selectable on the other channel.

6.1.8.2 AN/USH-42 Recorder/Reproducer Electronics Units. The recorder/reproducer electronics unit is located underneath the step between the TACCO an the SENSO stations. The R/REU incorporates two tape transport units and a local control panel (LCP) that has a separate set of controls and indicators for each tape transport unit. The upper tape transport unit is normally used for channel 1 (FLIR) video recording/playback, and the lower tape transport is normally used for channel 2 (radar) video recording/playback. The local control panel enables the user to have full control of the MR/RS when the RCAP is not installed or when the OVERRIDE switch on the LCP is set to on (up). Refer to Figure 6-8 for an explanation of R/REU controls and indicators.

INDEX NO.	CONTROL/INDICATOR	FUNCTION
3	Channel 1 STATUS display	Displays channel 1 status: RC — recording in progress. PL — play is in progress. FF — fast forward is in progress. FR — fast rewind is in progress. SF — search forward is in progress. SR — search reverse is in progress. PA — pause is selected. ST — standby mode is selected. EJ — cassette ejected, no cassette in tape transport. OV — RCAP is overridden, R/REU has control of MR/RS. OT — overtemperature (tape damage may occur). UT — undertemperature (tape transport cannot accept tape).
4	CHANNEL switch	Designates recording channel for audio and video in the record (RC) mode: NORM — FLIR video on channel 1, radar video on channel 2, (missile video, when present, on aircraft incorporating AFC-287). TACCO AUDIO IN on channel 1, SENSO AUDIO IN on channel 2. REVERSE — FLIR video on channel 2, radar video on channel 1, (missile video, when present, on aircraft incorporating AFC-287). TACCO AUDIO IN on channel 2, SENSO AUDIO IN on channel 1. **Note** On aircraft incorporating AFC-287, missile video will not be displayed on the TACCO scope if the CHANNEL switch is in the REVERSE position.
5	Channel 2 TAPE USED display	Displays channel 2 tape usage using same codes as channel 1 TAPE USED display.
6	Channel 2 SELF TEST display	Displays channel 2 self-test results using same codes as channel 1 SELF TEST display.
7	Channel 2 STATUS display	Displays channel 2 status using same codes as channel 1 STATUS display.
8	SENSO enable light	Illuminates to indicate that active video is being sent to the SENSO MPD.

Figure 6-7. AN/USH-42 Remote Control and Advisory Panel (Sheet 2)

INDEX NO.	CONTROL/INDICATOR	FUNCTION
9	SENSO (EJT 2) button	Routes active channel 2 video to the SENSO MPD. Ejects cassette from the channel 2 tape transport when pressed for 5 seconds. **Note** On aircraft modified by AFC-278, video data can be played back only on updated MPDs.
10	Channel 2 tape control rotary switch	Selects the operating mode for the lower (channel 2) tape transport: REC — places tape transport in record mode. SDBY — places tape transport in standby mode. REW — places the tape transport in fast rewind mode. SRCH REW — rewinds at 2 times normal speed. PLAY — places tape transport in play mode, playing the video recorded on the tape. PAUSE — places the tape transport in pause mode. SRCH FWD — forwards tape at two times the normal speed. FFWD — places tape transport in fast forward mode at maximum rate.
11	TACCO button	Routes active channel 1 video to the TACCO MPD. **Note** On aircraft modified by AFC-278, video data can be played back only on updated MPDs.
12	TACCO enable light	Illuminates to indicate active video is being sent to the TACCO MPD.
13	Channel 1 tape control rotary switch	Selects the operating mode for the upper (channel 1) tape transport. Operating modes are the same as those of the channel 2 tape transport.
14	COTAC (EJT 1) button	Routes active channel 2 video to the COTAC MPD. Ejects cassette from the channel 1 tape transport when pressed for 5 seconds. **Note** On aircraft modified by AFC-278, video data can be played back only on updated MPDs.
15	COTAC enable light	Indicates that active video is being sent to the COTAC MPD.

Figure 6-7. AN/USH-42 Remote Control and Advisory Panel (Sheet 3)

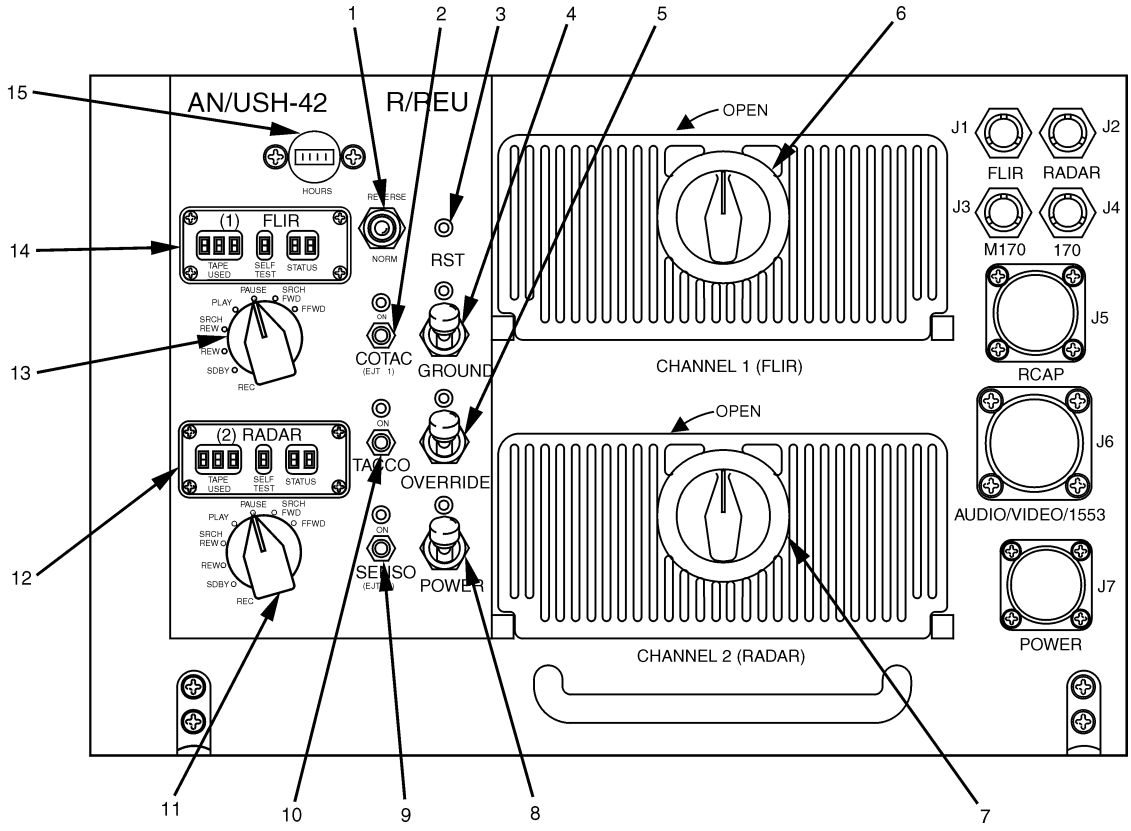

INDEX NO.	CONTROL/INDICATOR	FUNCTION
1	Channel switch	Designates recording channel for audio and video in the record (RC) mode: NORM — FLIR video on channel 1, radar video on channel 2, TACCO AUDIO IN on channel 1, SENSO AUDIO IN on channel 2. REVERSE — FLIR video on channel 2, radar video on channel 1, TACCO AUDIO IN on channel 2, SENSO AUDIO IN on channel 1.
2	COTAC (EJT 1) button	Routes active channel 2 video to the COTAC MPD. Ejects cassette from the channel 1 tape transport when pressed for 5 seconds. **Note** The COTAC enable light, located above the COTAC (EJT 1) button, illuminates to indicate that active video is being sent to the COTAC MPD. On aircraft modified by AFC-278, video data can be played back only on updated MPDs.

Figure 6-8. AN/USH-42 Recorder/Reproducer Electronics Unit (Sheet 1 of 4)

INDEX NO.	CONTROL/INDICATOR	FUNCTION
3	RST switch	Resets the R/REU: initiates IBIT self-test, ejects cassette if tape is being pulled, zeroizes the TAPE USED displays and removes active video from COTAC, TACCO, and SENSO MPDs. **CAUTION** Prior to pressing the RST switch, ensure that both channel 1 and channel 2 tape transports are in the SDBY mode.
4	GROUND enable switch	Selects ground or airborne operating mode for the MR/RS: On (up) — places MR/RS in the ground mode. Channel 1 video is sent for display on COTAC MPD only. Channel 2 video is sent for display on TACCO and SENSO MPDs only. Channel 1 and channel 2 tape transports may be operated simultaneously. **Note** The light above the GROUND enable switch illuminates when the switch is set to ON. Off (down) — places MR/RS in the airborne mode. Channel 1 or channel 2 video is sent for display on all three MPDs (COTAC, TACCO, SENSO). **Note** If the play, search forward, search reverse, or pause function is selected on one of the two channels while the MR/RS is in the airborne mode (GROUND enable switch set to off on the R/REU local control panel), these functions are not selectable on the other channel.
5	OVERRIDE enable switch	Selects the R/REU local control panel or the RCAP for control of the MR/RS: On (up) — places the R/REU local control panel in control of the MR/RS. **Note** The light above the OVERRIDE enable switch illuminates when the switch is set to on. Off (down) — places RCAP in control of the MR/RS.
6	Upper tape transport door knob	Controls access to the upper tape transport by locking (clockwise rotation) or unlocking (counter-clockwise rotation) the upper tape transport door.
7	Lower tape transport door knob	Controls access to the lower tape transport by locking (clockwise rotation) or unlocking (counter-clockwise rotation) the lower tape transport door.

Figure 6-8. AN/USH-42 Recorder/Reproducer Electronics Unit (Sheet 2)

INDEX NO.	CONTROL/INDICATOR	FUNCTION
8	POWER enable switch	Controls power to the MR/RS. On (up) — applies aircraft power to the MR/RS. **Note** The light above the POWER enable switch illuminates when the switch is set to on. Off (down) — removes power from the MR/RS.
9	SENSO (EJT 2) button	Routes active channel 2 video to the SENSO MPD. Ejects cassette from the channel 2 tape transport when pressed for 5 seconds. **Note** The SENSO enable light, located above the SENSO (EJT 2) button, illuminates to indicate that active video is being sent to the SENSO MPD. On aircraft modified by AFC-278, video data can be played back only on updated MPDs.
10	TACCO button	Routes active channel 1 video to the TACCO MPD. **Note** The TACCO enable light, located above the TACCO button, illuminates to indicate that active video is being sent to the TACCO MPD. On aircraft modified by AFC-278, video data can be played back only on updated MPDs.
11	Channel 2 tape control rotary switch	Selects the operating mode for the lower (channel 2) tape transport. REC — places tape transport 2 in record mode. SDBY — places tape transport in standby mode. REW — places the tape transport in fast rewind mode. SRCH REW — displays video while rewinding at 2 times normal speed and blanks audio. PLAY — places tape transport in play mode, playing the video recorded on the tape. PAUSE — places the tape transport in pause mode, freezing the video output on a single frame for approximately 7 minutes. Audio is blanked. SRCH FWD — displays video in forward mode at 2 times the normal speed and blanks audio. FFWD — places tape transport in fast forward mode at maximum rate.
12	Channel 2 TAPE USED display	Displays channel 2 tape usage as: beginning of tape (BOT), minutes of tape used, or end of tape (EOT).

Figure 6-8. AN/USH-42 Recorder/Reproducer Electronics Unit (Sheet 3)

INDEX NO.	CONTROL/INDICATOR	FUNCTION
	Channel 2 SELF TEST display	Displays results of channel 2 self-test. E — electronics unit (R/REU) self-test failure. G — R/REU and RCAP pass self-test, system in ground mode. P — R/REU and RCAP pass self-test, input video present. R — RCAP self-test failure. T — Recording inhibited by tab on tape cassette. V — R/REU and RCAP pass self-test, input video not present. E/R (alternating) — 1553 data bus failure.
	Channel 2 STATUS display	Displays channel 2 status: RC — recording in progress. PL — play is in progress. FF — fast forward is in progress. FR — fast rewind is in progress. SF — search forward is in progress. SR — search reverse is in progress. PA — pause is selected. ST — standby mode is selected. EJ — cassette ejected, no cassette in tape transport. OV — R/REU is overridden, RCAP has control of MR/RS. OT — overtemperature (tape damage may occur). UT — undertemperature (tape transport cannot accept tape).
13	Channel 1 tape control rotary switch	Selects the operating mode for the upper (channel 1) tape transport. Operating modes are the same as those selectable with the channel 2 tape control rotary switch.
14	Channel 1 TAPE USED display	Displays channel 1 tape usage as: beginning of tape (BOT), minutes of tape used, or end of tape (EOT).
	Channel 1 SELF TEST display	Displays results of channel 1 self-test. Display codes are the same as those used in the channel 2 SELF TEST display.
	Channel 1 STATUS display	Displays channel 1 status. Display codes are the same as those used in the channel 2 STATUS display.
15	Elapsed time HOURS meter	Indicates cumulative power-on time on the R/REU.

Figure 6-8. AN/USH-42 Recorder/Reproducer Electronics Unit (Sheet 4)

Note

On aircraft modified by AFC-278, video data can be played back only on updated MPDs. Video playback capability is not available on non-updated MPDs. Attempts to play back video on a non-updated MPD will blank the respective MPD display.

6.1.8.3 Video Switch Assembly. The video switch assembly is a wire assembly that routes selected video (FLIR video from the OR-263 FLIR or playback video from the R/REU) to the selected MPDs (COTAC, TACCO, or SENSO). Channel 1 record output is routed to the TACCO MPD and channel 2 record output is routed to the COTAC and SENSO MPDs. If the MR/RS is not installed or power is not applied to the system, the VSA routes OR-263 FLIR video signals to the MPDs.

6.1.8.4 AN/USH-42 Mission Recorder/ Reproducer Set Procedures

6.1.8.4.1 Tape Installation (Figure 6-9)

Note

Check the video cassette before going to the aircraft to ensure that the recording enabling tabs are intact.

1. Open the USH-42 RECORDER/REPRODUCER access door (underneath the step between the TACCO and SENSO stations) to gain access to the R/REU.
2. Ensure the POWER switch is set to off (down) on the local control panel.
3. Ensure the channel 1 and channel 2 tape control rotary switches are set to SDBY.
4. Ensure power is applied to the aircraft.
5. Ensure the USH-42 VIDEO RECORDER circuit breaker on the left hinged circuit breaker panel is in.
6. Set the POWER switch to on (up) on the local control panel. Wait for the MR/RS to complete BIT, then verify that a P (airborne mode) or G (ground mode) is displayed on the SELF TEST indicators.
7. On the R/REU front panel, rotate the tape transport door knob counter-clockwise to the stop and open the respective tape transport door.
8. Insert the video cassette with the window facing up into the tape transport unit and gently press the center of the front side of the cassette until the tape transport draws it into the compartment.

CAUTION

Care must be taken to ensure the tape cassette is inserted into the USH-42 Reproducer/Recorder Unit by applying moderate pressure to the middle of the cassette. Pushing on the left or right edges of the cassette while inserting it risks skewing the cassette and has the potential to damage the USH-42.

9. Verify that the TAPE USED indicators display 0.
10. Verify that the STATUS indicators display ST.
11. Close the tape transport door and rotate the tape transport door knob clockwise to the stop to lock the door.
12. Close the USH-42 RECORDER/REPRODUCER access door.

6.1.8.4.2 Cockpit Preflight Check

1. Open the USH-42 RECORDER/REPRODUCER access door (underneath the step between the TACCO and SENSO stations) to gain access to the R/REU.
2. Ensure the POWER switch is set to off (down) on the local control panel.
3. Ensure the channel 1 and channel 2 tape control rotary switches are set to SDBY.
4. Ensure power is applied to the aircraft.
5. Ensure the USH-42 VIDEO RECORDER circuit breaker on the left hinged circuit breaker panel is in.
6. Set the POWER switch to on (up), the OVERRIDE switch to on (up), the GROUND switch to on (up), and the REVERSE/NORM channel switch to NORM.

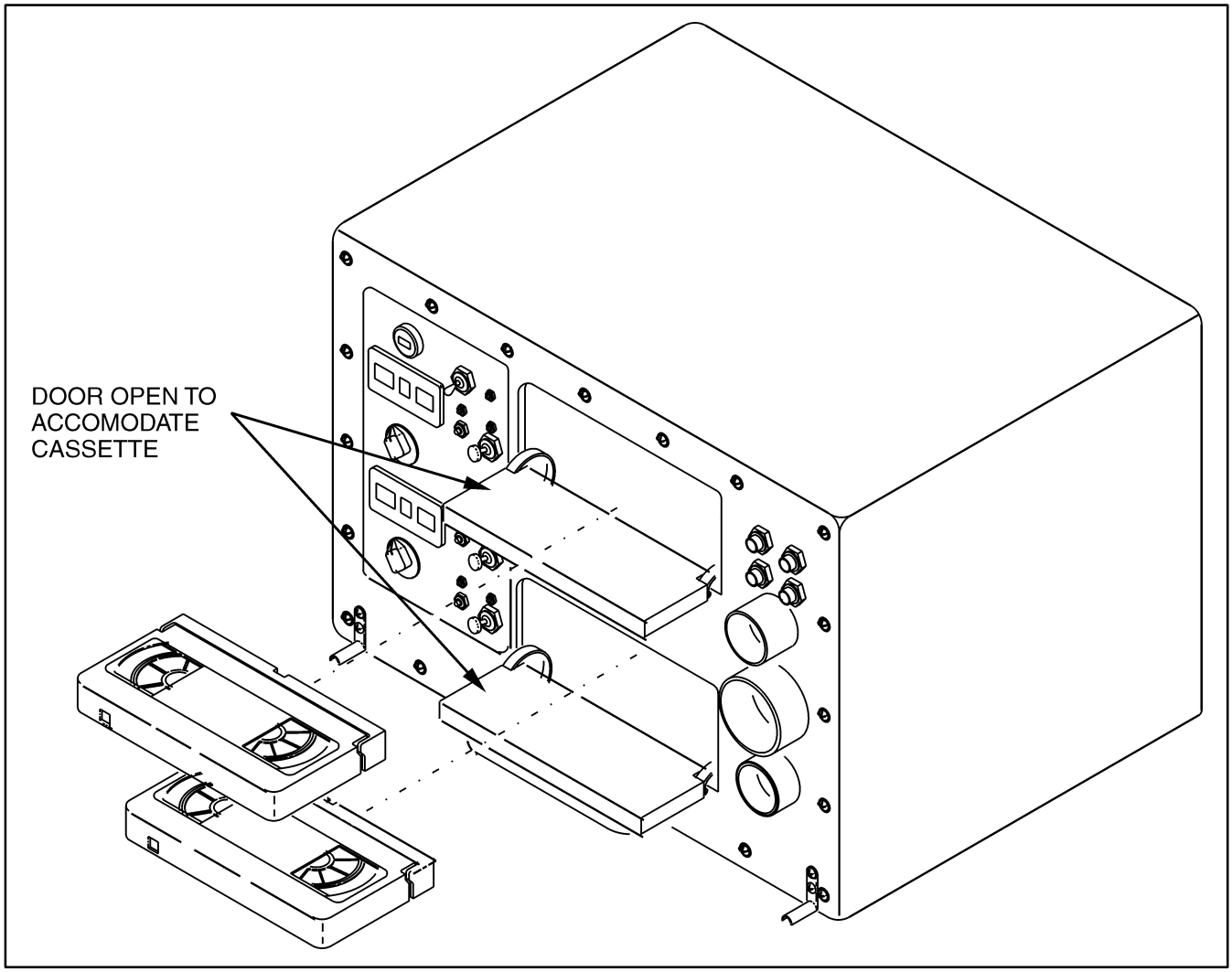

Figure 6-9. AN/USH-42 Recorder/Reproducer Electronics Unit

7. Wait for the MR/RS to complete BIT, then verify that a G (ground mode) is displayed on both CHANNEL 1 and CHANNEL 2 SELF TEST indicators.

8. Ensure that cassette tapes are loaded in the CHANNEL 1 and CHANNEL 2 tape transport units.

9. Press the RST button on the local control panel to perform initiated BIT and reset the displays.

10. Verify that the TAPE USED indicators display 0 for both channel 1 and channel 2.

11. Verify that the STATUS indicators display ST.

12. Verify that FLIR and radar are on.

13. Set the OVERRIDE switch to off (down).

14. Set the channel 1 and channel 2 tape control rotary switches on the RCAP to REC for approximately 60 seconds.

15. Set the channel 1 and channel 2 tape control rotary switches on the RCAP to PAUSE.

16. Verify the TAPE USED indicators display 001 (1 minute elapsed) on both channels.

17. Set the channel switch on the R/REU to REVERSE.

18. Repeat steps 14 and 15.

19. Verify the TAPE USED indicators display 002 (2 minutes elapsed) on both channels.

Note

- On aircraft modified by AFC-278, video data can be played back only on updated MPDs. Video playback capability is not available on non-updated MPDs. Attempts to play back video on a non-updated MPD will blank the respective MPD display.

- On aircraft modified by AFC-278 with non-updated displays, pressing the COTAC, TACCO, or SENSO buttons on the RCAP will blank the respective MPD display.

To verify that video data have been recorded on cassette tapes on aircraft modified by AFC-278 with non-updated displays, perform the following:

20. Using a stand-alone 8 MM video player and monitor, verify that the cassette tape from channel 1 plays back 1 minute of FLIR video followed by 1 minute of radar video. Then verify that the cassette tape from channel 2 plays back 1 minute of radar video followed by 1 minute of FLIR video.

6.1.8.4.3 Airborne Recording

1. Turn on FLIR or radar, as desired, for recording.

2. On the R/REU local control panel, set the POWER switch to on (up), the OVERRIDE switch to off (down), the GROUND switch to off (down), the REVERSE/NORM channel switch to NORM, and the channel 1 and channel 2 tape control rotary switches to SDBY.

3. Ensure cassette tapes are loaded in the channel 1 and channel 2 tape transport units.

4. Wait for the MR/RS to complete BIT, then verify that P is displayed on the SELF TEST indicators (see Figure 6-7 for self-test code list).

5. On the RCAP, set the channel 1 tape control rotary switch to REC to record FLIR video, or the channel 2 tape control rotary switch to REC to record radar video.

Note

The airborne recording function is normally performed using the RCAP controls, but the controls on the R/REU LCP may also be used.

6. Verify that the STATUS indicator displays RC, and the TAPE USED indicator begins to increment in 1 minute intervals.

7. To end recording, set the channel 1 and channel 2 tape transport rotary switches to SDBY and verify ST is displayed on the channel 1 and channel 2 STATUS indicators.

6.1.8.4.4 Airborne Playback. In the airborne playback mode, only one channel of previously recorded video is output to the TACCO and SENSO MPDs simultaneously.

Note

- On aircraft modified by AFC-278, video data can be played back only on updated TACCO and SENSO MPDs. Video playback capability is not available on non-updated MPDs. Attempts to play back video on a non-updated MPD will blank the respective MPD display.

- Video playback capability is not available on the COTAC MPD.

- Audio playback is not available during airborne playback.

1. Ensure the USH-42 VIDEO RECORDER circuit breaker on the left hinged circuit breaker panel is in.

2. Gain access to the R/REU. Set the channel 1 and channel 2 tape transport rotary switches on the LCP to SDBY, the POWER switch to on (up), the OVERRIDE switch to off (down), the GROUND switch to off (down), and the REVERSE/NORM channel switch to NORM.

3. Wait for the MR/RS to complete BIT, then verify that a P (input video present) is displayed on the SELF TEST indicators.

4. Verify that all three MPDs are displaying the default FLIR video.

5. Insert previously recorded cassette tapes in the channel 1 and channel 2 tape transport units.

6. At the RCAP, depress the COTAC, TACCO, and SENSO buttons and verify that the corresponding indicator lights illuminate.

7. Set the channel 1 tape control rotary switch to PLAY.

8. At the RCAP, verify that the channel 1 TAPE USED indicator begins to increment in 1-minute intervals, PL is displayed on the channel 1 STATUS indicator, and that channel 1 recorded video is displayed on the TACCO and SENSO MPDs.

Note

The airborne playback function is normally performed using the RCAP controls, but the LCP controls on the R/REU may also be used.

9. Set the channel 1 tape control rotary switch to SDBY.

10. At the RCAP, verify that ST is displayed on the channel 1 STATUS indicator.

11. Set the channel 2 tape control rotary switch to PLAY.

12. At the LCP, verify that the channel 2 TAPE USED indicator begins to increment in 1-minute intervals, PL is displayed on the channel 2 STATUS indicator, and that channel 2 recorded video is displayed on the TACCO and SENSO MPDs.

13. To end playback, set the channel 2 tape transport rotary switch to SDBY and verify ST is displayed on the channel 2 STATUS indicator.

6.1.8.4.5 Ground Recording

1. Open the USH-42 RECORDER/REPRODUCER access door (underneath the step between the TACCO and SENSO stations) to gain access to the R/REU.

2. Ensure the POWER switch is set to off (down) on the local control panel.

3. Ensure the channel 1 and channel 2 tape control rotary switches are set to SDBY.

4. Ensure power is applied to the aircraft.

5. Ensure the USH-42 VIDEO RECORDER circuit breaker on the left hinged circuit breaker panel is in.

6. Set the POWER switch to on (up) on the local control panel. Wait for the MR/RS to complete BIT, then verify that a G (ground mode) is displayed on the SELF TEST indicators.

7. Turn on FLIR or radar, as desired, for recording.

8. Set the OVERRIDE switch to on (up), the GROUND switch to on (up), and the REVERSE/NORM channel switch to NORM.

9. Ensure cassette tapes are loaded in the CHANNEL 1 and CHANNEL 2 tape transport units.

10. On the LCP, set the channel 1 tape control rotary switch to REC to record FLIR video, or the channel 2 tape control rotary switch to REC to record radar video.

Note

The ground recording function is normally performed using the LCP controls, but the controls on the RCAP may also be used.

11. Verify that for the respective channel, the STATUS indicator displays RC, and the TAPE USED indicator begins to increment in 1-minute intervals.

12. To end recording, set the channel 1 and channel 2 tape transport rotary switches to SDBY and verify ST is displayed on the channel 1 and channel 2 STATUS indicators.

6.1.8.4.6 Ground Playback. In the ground playback mode, the video recorded on the tape installed in the channel 1 tape transport is displayed on the TACCO MPD, and the video recorded on the tape installed in the channel 2 tape transport is displayed on the SENSO MPD.

Note

On aircraft modified by AFC-278, video data can be played back only on updated MPDs. Video playback capability is not available on non-updated MPDs. Attempts to play back video on a non-updated MPD will blank the respective MPD display.

1. Open the USH-42 RECORDER/REPRODUCER access door (underneath the step between the TACCO and SENSO stations) to gain access to the R/REU.

2. Ensure the POWER switch is set to off (down) on the local control panel.

3. Ensure the channel 1 and channel 2 tape control rotary switches are set to SDBY.

4. Ensure power is applied to the aircraft.

5. Ensure the USH-42 VIDEO RECORDER circuit breaker on the left hinged circuit breaker panel is in.

6. Set the POWER switch to on (up) on the local control panel. Wait for the MR/RS to complete BIT, then verify that a G (ground mode) is displayed on the SELF TEST indicators.

Note

The ground playback function is normally performed using the R/REU controls, but the controls on the RCAP may also be used.

7. Set the OVERRIDE switch to on (up), the GROUND switch to on (up), and the REVERSE/NORM channel switch to NORM.

8. Insert previously recorded cassette tapes in the channel 1 and channel 2 tape transport units.

9. At the LCP, depress the TACCO and SENSO buttons and verify that the corresponding indicator lights illuminate.

10. Set the channel 1 tape control rotary switch to PLAY.

11. At the LCP, verify that the channel 1 TAPE USED indicator begins to increment in 1-minute intervals, PL is displayed on the channel 1 STATUS indicator, and that channel 1 recorded video is displayed on the TACCO MPD.

12. Set the channel 1 tape control rotary switch to SDBY.

13. At the LCP, verify that ST is displayed on the channel 1 STATUS indicator.

14. Set the channel 2 tape control rotary switch to PLAY.

15. At the LCP, verify that the channel 2 TAPE USED indicator begins to increment in 1-minute intervals, PL is displayed on the channel 2 STATUS indicator, and that channel 2 recorded video is displayed on the SENSO MPD.

16. To end playback, set the channel 2 tape transport rotary switch to SDBY and verify ST is displayed on the channel 2 STATUS indicator.

6.1.8.4.7 Cassette Tape Removal

1. Ensure power is applied to the aircraft.

2. Open the USH-42 RECORDER/REPRODUCER access door (underneath the step between the TACCO and SENSO stations) to gain access to the R/REU.

3. Ensure the channel 1 and channel 2 tape control rotary switches are set to SDBY.

4. Ensure the USH-42 VIDEO RECORDER circuit breaker on the left hinged circuit breaker panel is in.

5. Ensure the POWER switch is set to on (up) on the local control panel, and wait for the MR/RS to complete BIT.

Note

To remove the cassette tape, power must be applied to the R/REU.

6. On the R/REU front panel, rotate the tape transport door knob counter-clockwise to the stop and open the respective tape transport door.

7. Press the COTAC (EJT 1) button for 5 seconds to eject the cassette tape from the upper (channel 1) tape transport, or the SENSO (EJT 2) button for 5 seconds to eject the cassette tape from the lower (channel 2) tape transport.

8. Remove the cassette tape from the respective tape transport.

9. Close the tape transport door and rotate the tape transport door knob clockwise to the stop to lock the door.

10. Close the USH-42 RECORDER/REPRODUCER access door.

CAUTION

The video tape cassettes and cassette cases present a FOD hazard. Positive control of video tape cassettes and cassette cases should be maintained and proper stowage procedures should be employed to prevent damage to the aircraft.

Note

An EJECT button located behind each tape transport access door may also be used to eject the cassette tapes when 28 vdc power is applied to the R/REU. These two EJECT buttons are not functional when their respective tape transports are in the RECORD mode.

6.2 APS-137(V) RADAR SYSTEM

6.2.1 Introduction. The APS-137(V) is an ISAR system that provides the aircraft with both a high resolution ASW/ASUW search capability as well as an imaging capability. It also provides the means to interrogate and receive IFF information. To accomplish these functions, the radar set, consisting of the transmitter, receiver/pulse compressor, under control of the RIU, generates and radiates I band RF energy as well as D band IFF energy on an antenna that rotates up to 360°. Radar system parameters are shown in Figure 6-10. The returned RF energy is detected by the radar set and processed by the SDC and is then displayed on the MPD. An interface diagram of the APS-137(V) radar is shown in Figure 6-11.

6.2.2 Hardware Introduction. A list of the radar system components is shown in Figure 6-12. The radar system interfaces with the following systems:

1. APX-76 IFF interrogator set
2. AYK-10/AYK-23 general purpose digital computer (GPDC)
3. ASA-82 tactical display system (TDS)
4. C-11229/APS-137(V) off-line control unit (OLCU).

The radar system comprises eight hardware components.

1. RIU
2. Synchronizer/exciter
3. Transmitter

PERISCOPE	NAV/WEATHER	SURFACE SEARCH	IMAGE
RF: 9.5–10.0 GHz	RF: 9.5–9.8 GHz	RF: 9.6–9.7 GHz	RF: 9.6–9.7 GHz
PRF: 1627.9–2027.1 Hz	PRF: 369.9–387.3 Hz	PRF: 369.9–387.3 Hz	PRF: 2025.6/508.6 Hz
PW: 0.003 μsec	PW: 0.5 μsec	PW: 0.012 μsec	PW: 0.012 μsec
ANT: 300 rpm	ANT: 6 rpm	ANT: 60 rpm	ANT: Searchlight (0)
Pulse Type: Compressed	Pulse Type: Frequency Agile	Pulse Type: Compressed	Pulse Type: Compressed

Figure 6-10. Radar System Parameters

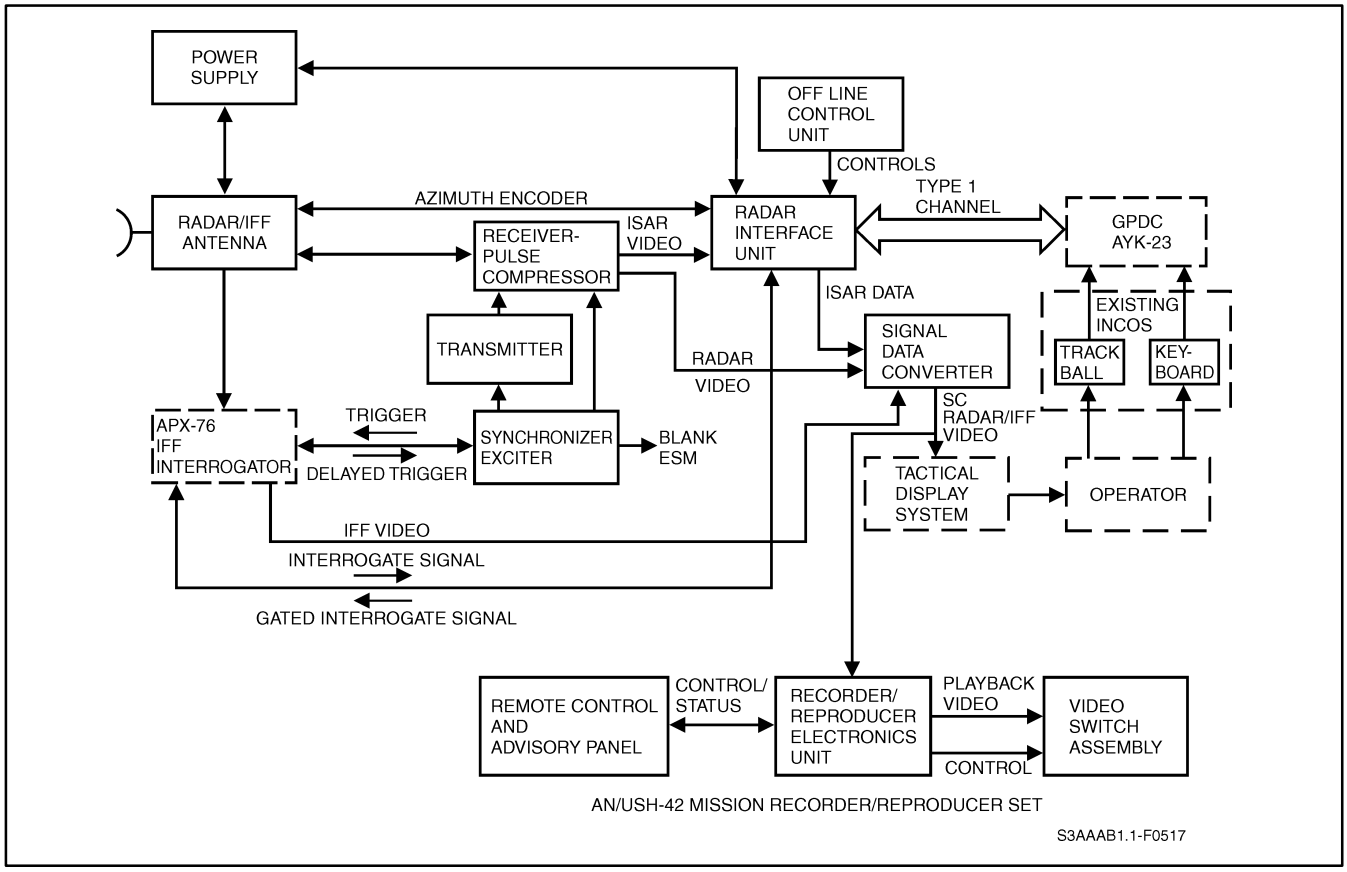

Figure 6-11. Radar Interface Block Diagram

TYPE DESIGNATOR	NOMENCLATURE	LOCATION
PP-7813/APS-137	Power Supply	Internal RH Aft Avionics Bay
SN-546/APS-137	Synchronizer/Exciter	Fwd External RH Rack
T-1203/APS-116	Transmitter	Fwd External RH Rack
R-2231/APS-137	Receiver/Pulse Compressor	Fwd External RH Rack
AS-3637/APS-137	Antenna	Radome
CV-3744/APS-137	Signal Data Converter	Internal RH Aft Avionics Bay
CV-11164/APS-137	Radar Interface Unit	Internal RH Aft Avionics Bay

Figure 6-12. Radar System Components

4. Receiver/pulse compressor

5. Antenna

6. SDC

7. Programmer/power supply

8. OLCU.

Associated equipment installed to perform as a complete avionics subsystem include an INCOS tray, an MPD, and a wave guide pressurization unit.

6.2.3 CV11164/APS-137 Radar Interface Unit. The RIU is located in the right internal avionics bay. The RIU has seven basic functions:

1. GPDC interfacing

2. Radar control

3. Display control

4. ISAR control

5. Target automatic tracking

6. BITE monitoring interface

7. IFF control.

When the radar is operating in the on-line configuration, the RIU is the only radar hardware component that interfaces with the GPDC. Information is transferred between the RIU and GPDC on a two-way data bus. This information includes radar set control (through the INCOS), and radar status information (through the BITE circuitry). The RIU supplies outputs to control all the radar set components. Whenever the RIU is under on-line control, the RIU receives and stores commands from the GPDC even though the radar may not be radiating. During off-line operations, the OLCU has control of the RIU and the GPDC control words are ignored. The RIU accepts control inputs from the OLCU for radar system operations. Figure 6-13 provides the RIU functional diagram.

During both on-line and off-line operations, the RIU controls antenna azimuth, tilt, and stabilization through the programmer/power supply. Radar stabilization is output from the NIU based on the System Source Selection made in the CDNU. Azimuth position data are used in the image mode to maintain correct antenna position. Antenna tilt, aircraft attitude, and ground speed are used in all modes of operation to compensate for aircraft motion.

CAUTION

The radar antenna must be locked by placing the OLCU to standby, 0° tilt, or by selecting LOCK STAB under ANT CONT option to prevent antenna damage if any of the following are expected:

1. Abrupt or prolonged aircraft maneuvers with angle-of-banks greater than 25° and/or pitch angles greater than 15°.

2. Takeoffs and landings.

Whenever the antenna is in the sector between 120 and 240° relative to the nose of the aircraft, the RIU inhibits transmitter radiation (bulkhead blanking) (Figure 6-14). In addition, when sector scan is selected, it inhibits transmitter radiation except in the selected sector area.

Display control is accomplished by the RIU through the SDC. This includes range and heading marks as well as TDS position.

Image video processing is accomplished by the RIU through the use of a Doppler processor. AGC for the image data are accomplished in the RIU by the sampling of the incoming data and automatically adjusting the receiver gain to enhance signal processing. Image A-scan data are produced by the conversion of image data to a linear amplitude signal. These data are stored digitally and transferred to the SDC for display.

The RIU contains automatic tracking circuitry that has the capability to track a single radar target. The TDS that controls the B-scan center is utilized to control the center of the target tracking area.

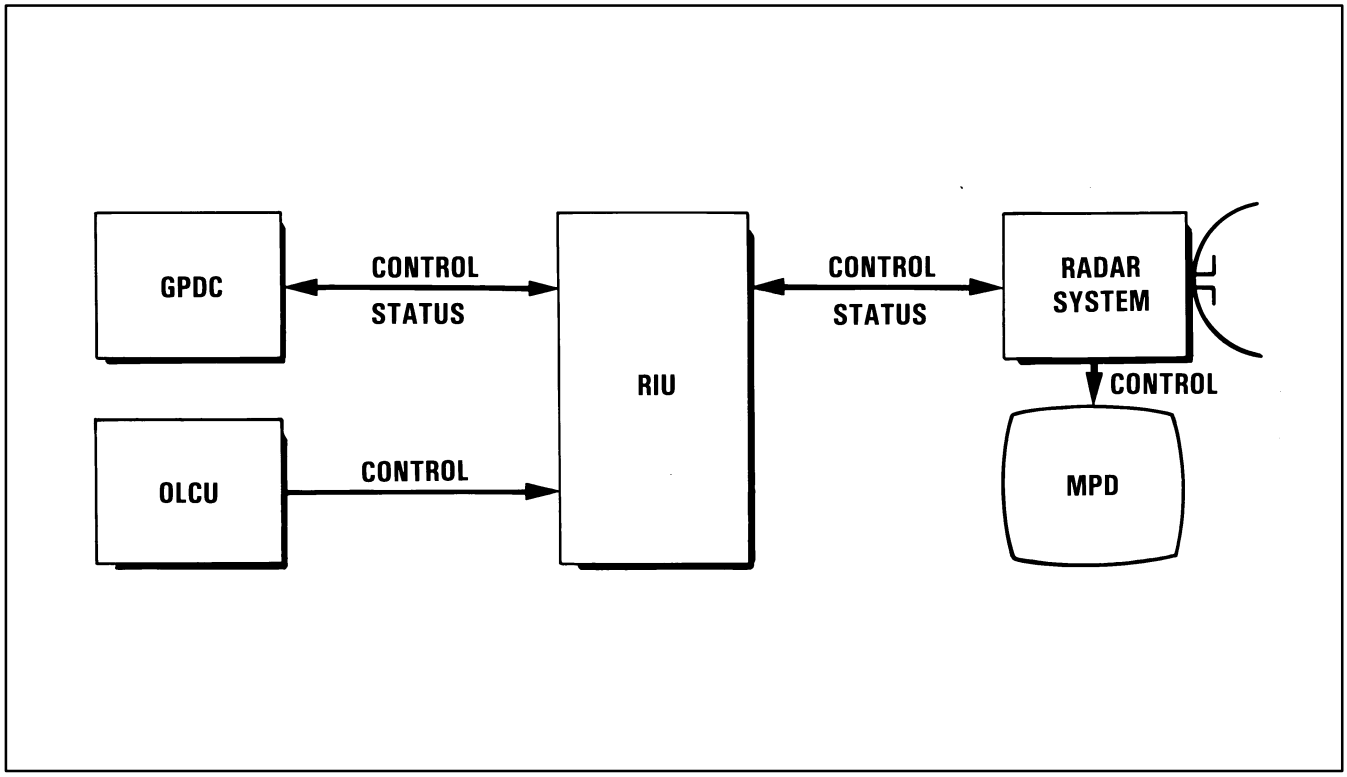

Figure 6-13. RIU Functional Diagram

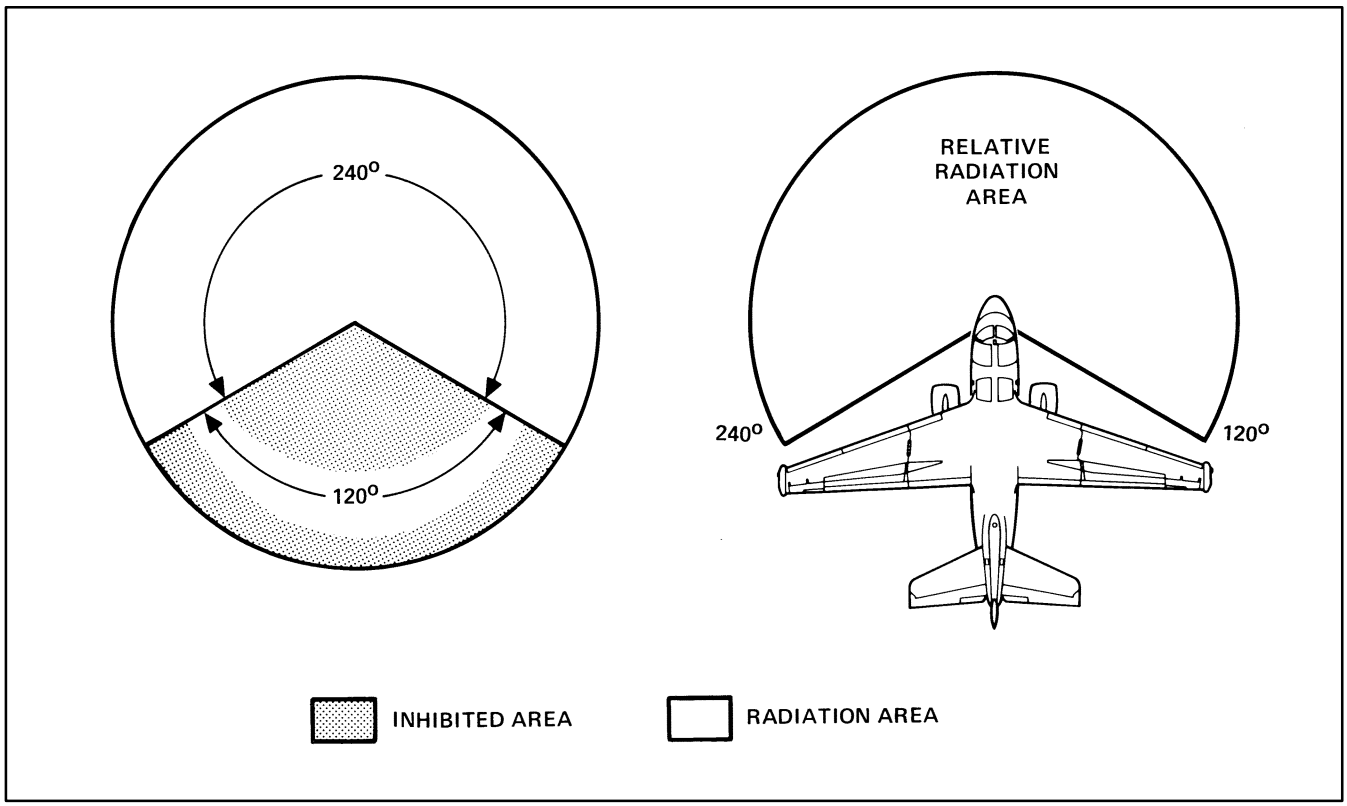

Figure 6-14. Antenna Radiation Area

The RIU monitors BITE signals from the programmer/power supply for each radar WRA component and notifies the GPDC of any failure. It also monitors component overtemperature sensor outputs. If an overtemperature condition exists, the RIU sends this data to the GPDC. If the overtemperature condition continues to exist after 2 minutes, the RIU sends an interrupt signal to the GPDC and uses a shutdown priority based upon the component in which the overtemperature condition exists.

If the radar system is operating in the off-line mode, the RIU does not report the overtemperature condition to the GPDC, but performs the overtemperature shutdown procedure in the same priority as on-line operations.

6.2.4 SN-546/APS-137 Synchronizer/Exciter. The synchronizer/exciter is located in the right forward external rack. It controls overall system timing as well as transmitter pulse generation and IFF synchronization.

All radar system timing is derived from a stable crystal-controlled oscillator. The oscillator output is sent to the RIU, receiver/pulse compressor, and transmitter for system timing. The synchronizer/exciter also receives a trigger pulse from the IFF interrogator to synchronize the IFF operation to the radar set. It also provides a blanking signal to the aircraft ESM system to prevent detection of the aircraft's own radar signal.

The generation of the radar pulse is accomplished by an internal signal generator that produces a trigger at the corresponding PRF for the selected radar mode. A programmed jitter is included in the radar trigger to vary the PRF. Varying the PRF between transmitting cycles helps eliminate second-time-around returns and provides for some protection from jamming sources.

The synchronizer/exciter contains a VCO that controls frequency agility. This VCO is decoupled from the system clock and timing signals and produces a random dc voltage. This allows the frequency from the VCO to be randomly selected for each PRF within a 300-MHz bandwidth.

The synchronizer/exciter also contains a transmitter wave form generator that uses the system clock, synchronization and timing signals, and agile control voltage to produce a drive signal to the transmitter. This drive signal consists of either an FM or FA pulse.

The synchronizer/exciter BITE monitors critical points and develops a BITE signal to indicate GO/NO GO operation. This signal is sent to the programmer/power supply for reporting to the GPDC via the RIU.

6.2.5 T-1203/APS-116 Transmitter. The transmitter is located in the right forward external rack. The transmitter's prime function is to amplify the RF pulse received from the synchronizer/exciter. It is considered a two-stage amplifier consisting of a TWT and cross field amplifier (CFA) that performs amplification of an original 1-watt pulse, received from the synchronizer/exciter, to a final value of 500 kw for transmission. The wideband, low-noise characteristics of the TWT enable the APS-137 to transmit an FM pulse and to obtain the rapid switching necessary for frequency agility.

The control signals from the RIU control transmitter operation are:

1. Output power control (antenna or dummy load)
2. Transmitter inhibit (nonradiation)
3. High-voltage on (radiate).

When the transmitter is inhibited, e.g., the aircraft senses weight-on-wheels, it is disabled from transmitting. If transmitter operation is required without radiating, DUMMY RADIATE can be selected via the GPDC. This routes the radar RF energy to a dummy load in the transmitter.

The transmitter BITE circuitry monitors critical points to detect failures. If a failure occurs, a BITE signal is sent to the programmer/power supply for reporting to the GPDC via the RIU. When other components fail, operation of the transmitter is inhibited to prevent its failure or to prevent it from exhibiting a false fail condition.

6.2.6 R-2231/APS-137 Receiver Pulse Compressor. The receiver/pulse compressor is located in the right forward external rack. The function of the receiver/pulse compressor is to accept the return RF energy received by the antenna, process this energy and convert it into video signals. These signals are sent to the SDC and RIU for additional processing and routing to the display. The wave guide passes through the receiver/pulse compressor and directs high-power transmitter RF to the antenna for radiation.

When the received RF enters the receiver/pulse compressor, it is amplified and combined with mixer signals sent from the synchronizer/exciter to produce an IF. The IF is then pulse compressed by a 3-nanosecond (periscope mode) or 12-nanosecond (surface search and image modes) pulse compressor to improve the signal-to-noise ratio and increase resolution. The compressed IF pulse is amplified and detected, and the resulting video passes through both a video preprocessor and threshold circuitry to provide analog and digital signals for subsequent processing. When in the image mode, the compressed IF is routed to a demodulator which removes the aircraft-to-target velocity Doppler components. After demodulation, the resultant analog components are converted (quantized) by passing through analog-to-digital converters. These data are then passed through an expander circuit to slow down its input to a level appropriate for subsequent processing in the RIU.

RF gain control, both automatic (AGC) and manual (PPI or B-scan FAR), occurs in the receiver/pulse compressor. The signal is passed through as many as three gain control loops, dependent on the mode selected. These loops are used to maintain a constant false-alarm rate out of the receiver/pulse compressor unit in both noise and sea-clutter environments.

6.2.7 AS-3637/APS-137 Antenna. The antenna is a conventional parabolic dish that is fed by a horizontally polarized feed horn. It is located in the nose radome. The antenna radiates and receives RF energy for radar and IFF operation.

Four servomechanisms move the reflector and/or feed horn assembly to direct the RF energy radiation and receiving patterns. The servomechanisms receive their drive signals from the programmer/power supply. The pitch and roll servomechanisms stabilize the antenna to compensate for aircraft position and attitude. The stabilization limit for pitch motion is ±15° with a rate of 20.05° per second, the roll limit is ±25° with a rate of 57.3° per second (Figure 6-15). The tilt servomechanism provides a means of positioning the reflector assembly for radiating and receiving signals in the range of –15° to +10° relative to the deck angle of the aircraft (Figure 6-16). The azimuth servomechanism provides for slow (6 rpm), medium (60 rpm), and fast (300 rpm) rotational rates through a 360° scan area, as well as providing for sector scan or searchlight positioning.

Antenna status is monitored by the programmer/power supply. BITE signals are input to the antenna by the programmer/power supply.

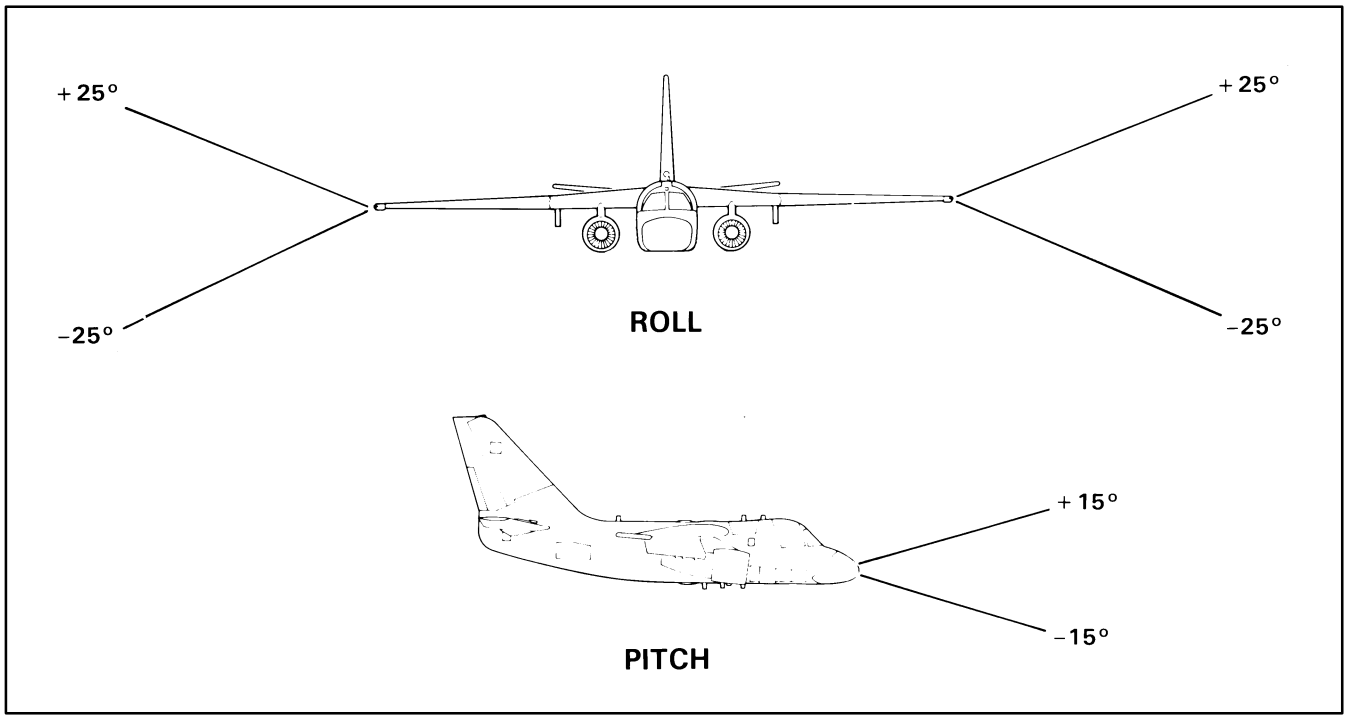

Figure 6-15. Antenna Stabilization

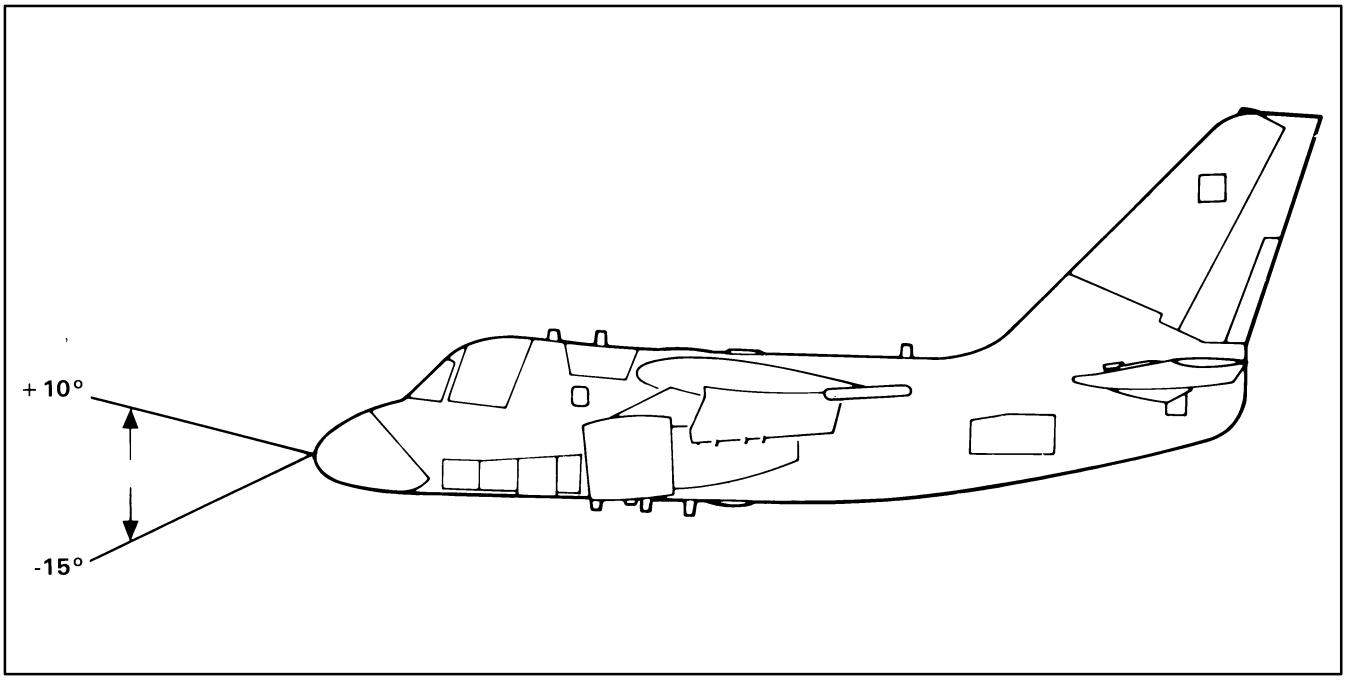

Figure 6-16. Antenna Tilt

6.2.8 CV-3744/APS-137 Signal Data Converter. The SDC is located in the right internal rack. The functions of the SDC include processing of the following:

1. Inputs from the radar set (radar video)
2. Inputs from the RIU (image data, control signals)
3. Inputs from the IFF interrogator (IFF video).

The SDC performs its basic function by storing data at the appropriate locations of a solid state, random access memory. This stored data are then read out of the memory in the order and at the rate required for the desired display. Video from the radar may be stored for display either separately or simultaneously with superimposed graphics.

The radar video from the radar set is processed through a video conditioner to improve signal-to-noise ratio. The control signals (from the RIU) are utilized to convert the video into appropriate display format for integration, storage, and readout of composite video to the TDS. The resultant PPI and B-scan video is passed through respective processors that perform analog to digital scan conversion. The video conditioner also delays the IFF video to provide radar and IFF video alignment for display.

The SDC receives image and A-scan data from the RIU and buffers it for display using the simultaneous image/A-scan format. This is accomplished by passing the combined data through an image interface that also performs integration based on operator aperture selection. When commanded, the SDC will remove the A-scan display from the presentation producing an image-only format.

The SDC also produces the PPI and B-scan formats. It produces these formats by accepting radar video data in polar coordinate form and converting it into the proper display format. The SDC provides simultaneous PPI and B-scan video using parallel processing circuitry. When commanded by the RIU, the SDC removes the B-scan format from the presentation providing a PPI only format. The B-scan circuitry will continue to process video even when the B-scan display is not selected.

When autotrack is selected, the SDC samples the video at the acquisition rate of the radar mode selected and displays the autotrack window to indicate the patch area on the B-scan display. Once the autotrack lock-on has been achieved, the SDC automatically reduces the sampling resolution and updates the autotrack window to reflect the track patch size.

With Auto Track active and locked on to the target, activation of the Enter Fix function will sample the RIU calculated range and bearing to calculated and update the radar contact positions. Radar tracks established through the GEN Track function will utilize these radar fixes to establish the target position, speed, and heading.

Tactical display symbology generated by the SDC includes range and heading marks (Figure 6-18). There are four range marks displayed on each selected range scale. The SDC generates a heading mark when the antenna heading is at 0° relative to the aircraft heading. This mark consists of an intensified line between the PPI origin and the inner (first) PPI range mark.

6.2.9 PP-7813/APS-137 Programmer/Power Supply. The programmer/power supply is located in the right internal rack. It provides power to the radar set, controls antenna operation, and processes BITE signals from the various radar set component BITE circuitry (Figure 6-19).

Primary power 115 vac, three-phase, 400 Hz, and reference voltage 26 vac, 400 Hz, is supplied to the power supply unit from the aircraft electrical system to produce unregulated dc power. The unregulated dc voltage is then regulated in the individual components for use. In addition to the unregulated dc voltage, the power supply also provides 115 vac to the transmitter unit.

Servo drive signals (tilt/roll/pitch/azimuth) are generated in the programmer/power supply on command from the RIU that controls antenna scan and position. These drive signals are derived from antenna scan mode and radar mode control signals from the RIU and error signals from the antenna. The programmer/power supply also reports status information from each radar set component via the RIU, to the GPDC. It also provides for reporting the wave guide pressurization status, IFF triggers, and overtemperature conditions in the following units:

1. Receiver/pulse compressor

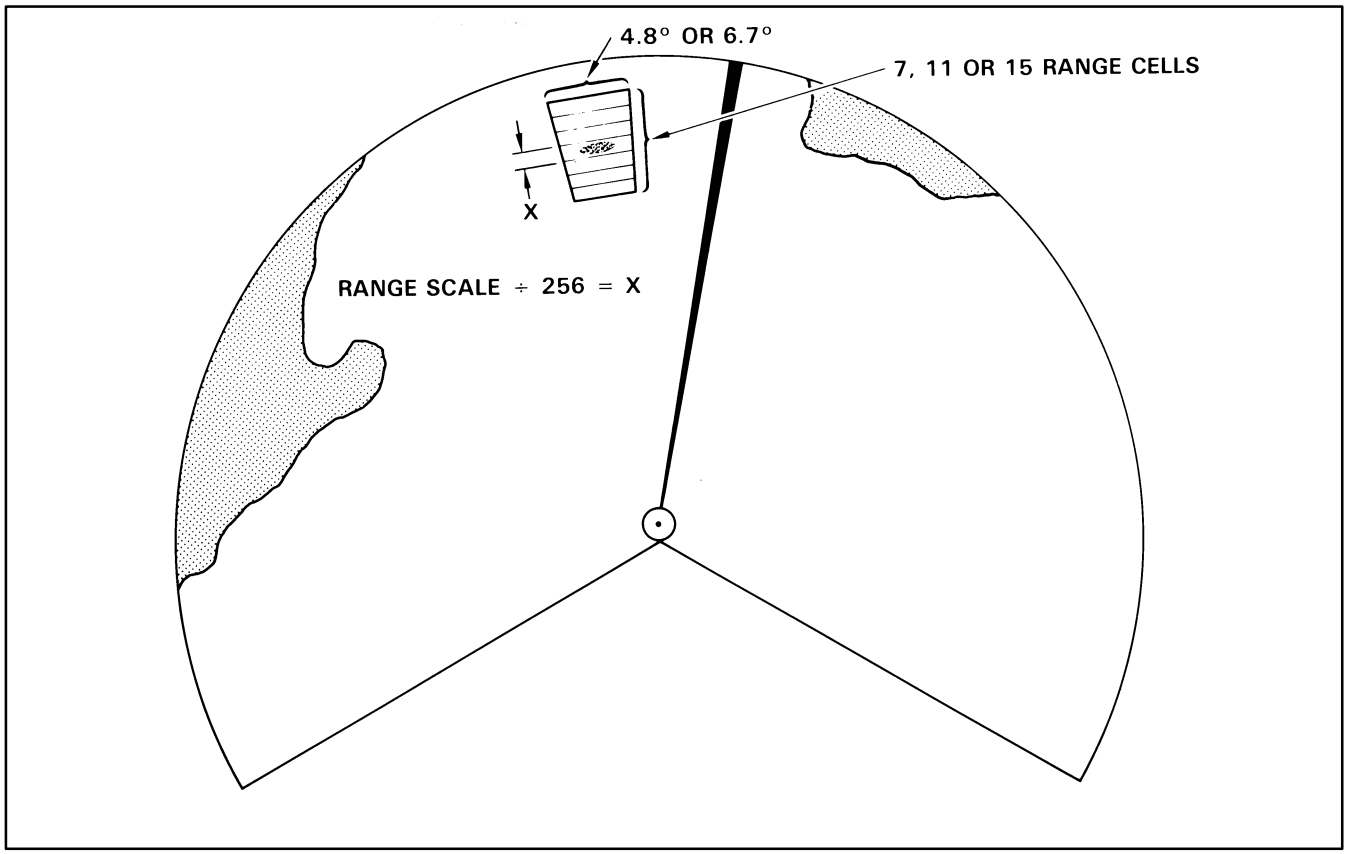

Figure 6-17. PPI Format with Patch

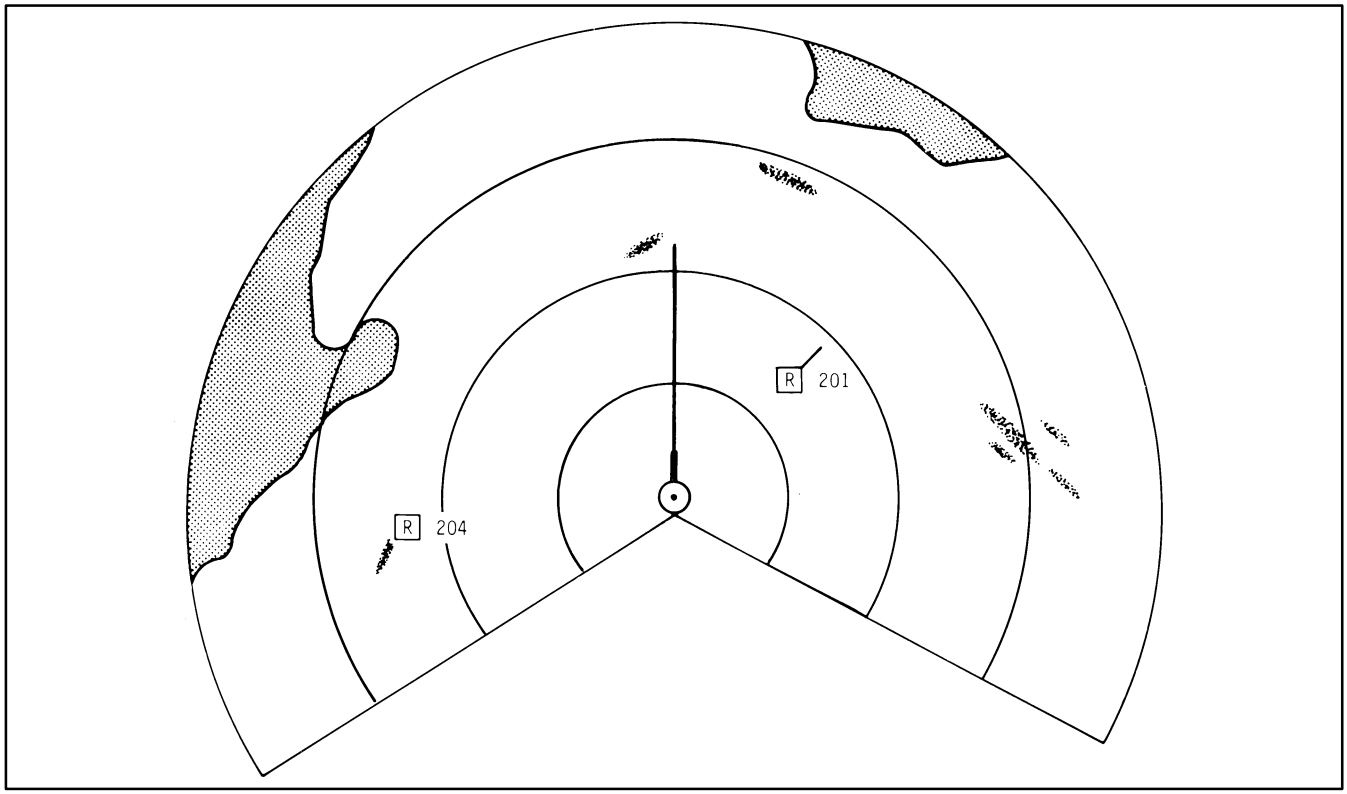

Figure 6-18. PPI Format with Range/Heading Marks

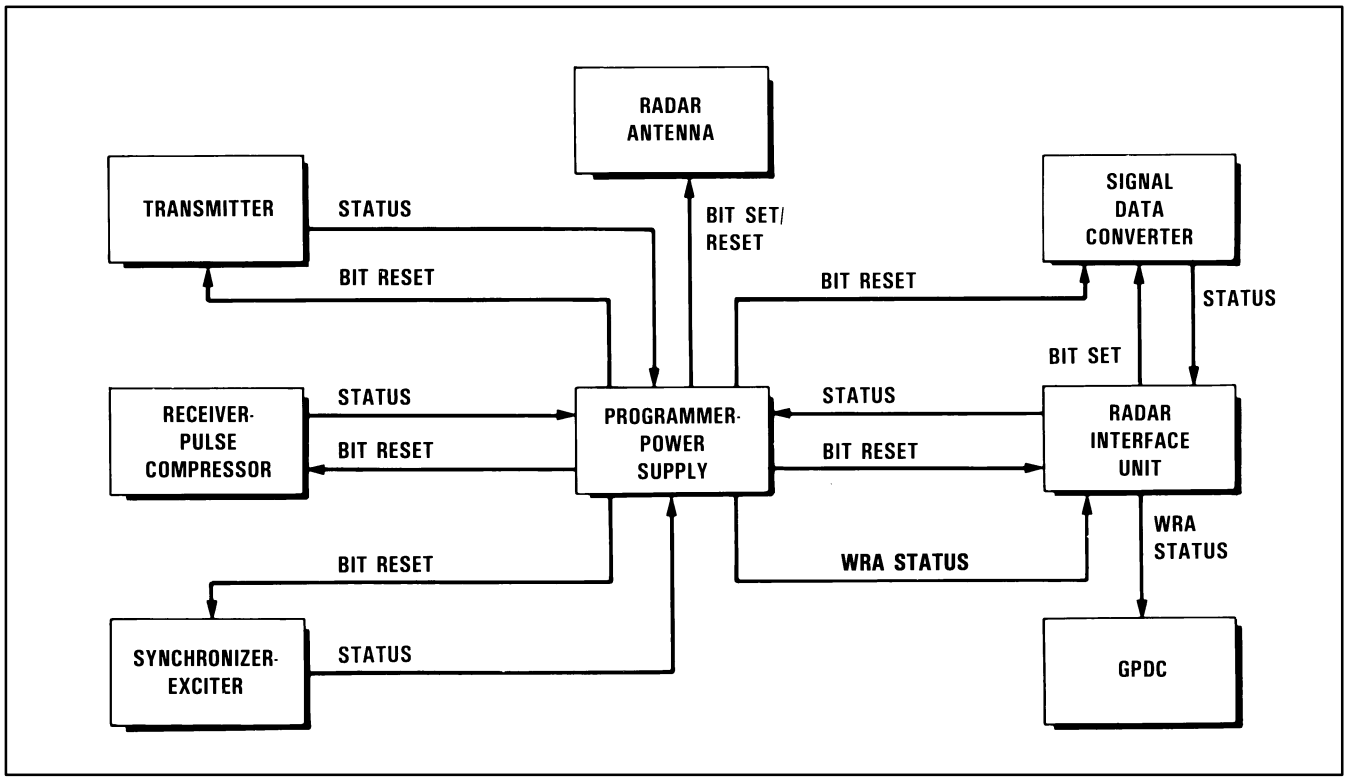

Figure 6-19. Programmer/Power Supply BITE Circuitry

2. Synchronizer/exciter

3. Programmer/power supply.

6.2.10 C-11229/APS-137(V) Off-Line Control Unit. The OLCU is located on the COTAC instrument panel (Figure 6-20). It controls overall radar system power as well as controlling the radar when in the off-line mode of operation.

In the off-line configuration, the only radar mode available to the operator is the navigation/weather avoidance mode. The OLCU inputs control signals to the radar system via the RIU. These off-line controls are a set of switches located on the face of the OLCU. These control switches include the following:

1. RANGE

2. CONTROL

3. TILT

4. GAIN.

CAUTION

The radar antenna must be locked by placing the OLCU to standby, 0° tilt, or by selecting LOCK STAB under ANT CONT option to prevent antenna damage if any of the following are expected:

1. Abrupt or prolonged aircraft maneuvers with angle-of-banks greater than 25° and/or pitch angles greater than 15°.

2. Takeoffs and landings.

Note

- The UDG must be on for off-line radar video to be available to the MPDs.

- Anytime the OLCU control switch is placed out of the OFF position, a warmup period of up to 5 minutes may be required before operating the radar.

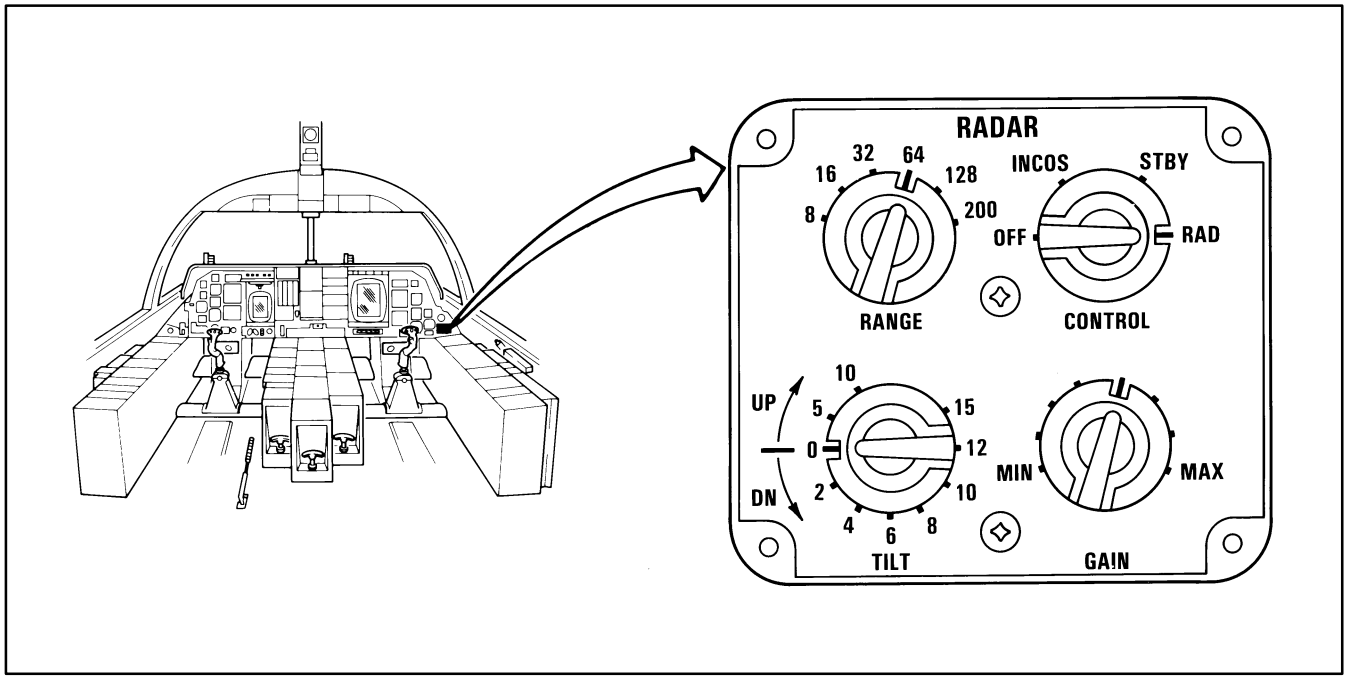

Figure 6-20. C11229/APS-137 Off-Line Control Unit

6.2.11 Peripheral Equipment. Peripheral equipment that interfaces with the radar system consists of the following:

1. ACLS/radar test switch
2. Wave guide pressurization system
3. USH-42 mission recorder.

The ACLS/radar test switch is located at the COTAC instrument panel (Figure 6-21). It is used to override the weight-on-wheels logic to enable radiation on the ground. Its primary use is with the ORT.

The wave guide pressurization system is located in the right forward external rack (Figure 6-22). The system provides pressurization to the wave guide to prevent wave guide arcing during radar pulse transmission. The wave guide pressure system consists of two supply bottles containing freon gas. Each bottle is capable of supplying enough freon, 20 psi minimum, to the wave guide to maintain a pressure of 26 psi, with an allowable tolerance of ±2 psi. The freon system will switch bottles automatically when one bottle becomes empty, if the selector valve senses pressure from the other bottle, and the selector valve is in the FWD or AFT position (not OFF).

6.2.12 Modes of Operation. The S-3B is capable of operating in any of four different modes. These modes, as described below, enable the operator to utilize the radar in a multitude of environments and for a wide range of purposes.

6.2.12.1 Periscope Mode. A high-resolution, fast antenna rotation rate, short-range mode. Optimized for the low altitude detection of periscope-size targets with a limited exposure time. The compressed pulse equates to a resolution of less than 1.5 feet. This mode provides excellent detection capability in higher sea states. The antenna rotates at 300 rpm. The maximum range is 32 nm.

6.2.12.2 Navigation/Weather Avoidance Mode. A low-resolution, slow antenna rotation rate, long-range mode. This frequency-agile mode has a range resolution of 250 feet, and enables the crew to safely identify navigational points and weather patterns in order to maintain safety of flight requirements. The navigation/weather avoidance mode can also be utilized for medium range surface search requirements. The antenna rotates at 6 rpm. The maximum range is 200 nm.

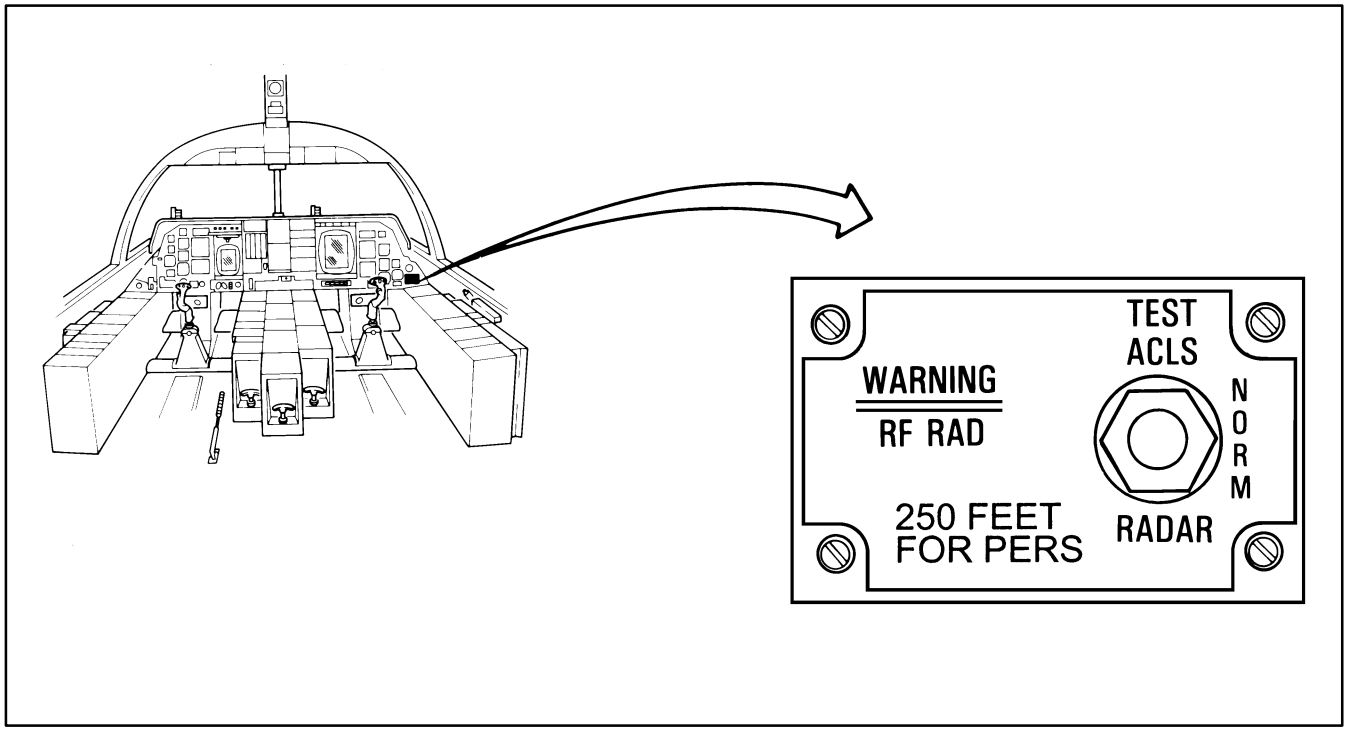

Figure 6-21. ACLS Radar Test Switch Location

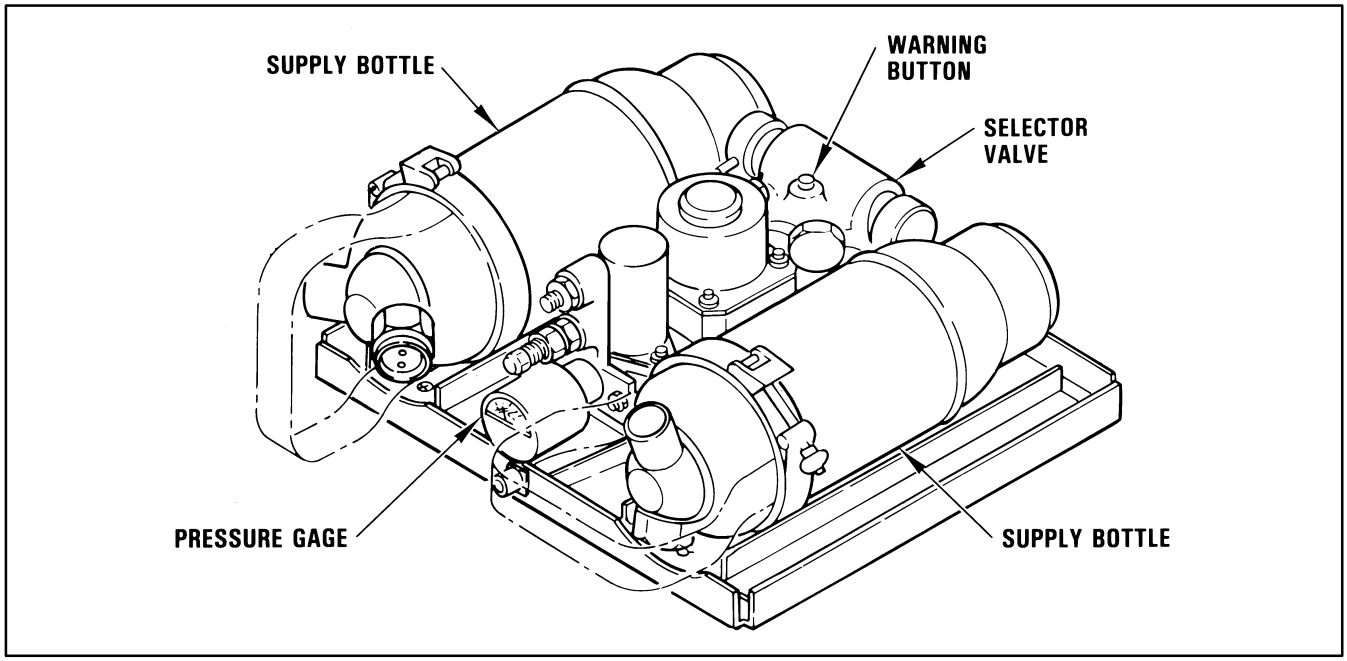

Figure 6-22. Wave Guide Pressurization System

6.2.12.3 Surface Search Mode. A medium-resolution, medium antenna rotation rate, long-range mode. Used primarily for long-range detection, it is well suited for detection of medium and large size ships. This mode also incorporates pulse compression which equates to a resolution of 6 feet. The surface search mode also has the capability to track numerous targets simultaneously. The antenna rotates at 60 rpm. The maximum range is 200 nm.

6.2.12.4 Image Mode. Provides visually identifiable images of surface targets. The antenna is stopped (search lighted) at an azimuth angle commanded by the GPDC. Operator selectable PRFs (2,000 or 500 pps) are available to aid in the reduction of clutter and sea return. While in this mode of operation, the operator also can use the classification aid function to assist him in the image interpretation process. Image window is 1,280 feet wide.

6.2.13 Radar Display Formats. All display formats present scan-converted video data only. The PPI display format is represented in Figure 6-23. Several operator aids can be used in this display format including range and heading markers and a TDS.

6.2.14 Target Designator and Hook Symbol. The Hook and TDS symbols shall always be aligned in the following way. The TDS symbol position is aligned to coincide with the hook position when auto track is not active. The hook position shall define the center of the desired search area when the auto track function is activated. Upon auto track lock-on the TDS position is updated and aligned to coincide with the target centroid and the hook position is updated to coincide with the TDS position. Control of the TDS position is accomplished with outputs of x, y distances by the GPDC through the RIU/GPDC interface. This offset position is established either at program start or through a re-center on A/C or hook. Control of the hook position while auto tracking a target is derived by the GPDC from the RIU transmitted target range and bearing, and origin offset. The B Scan center shall always be aligned with the TDS symbol.

6.2.15 Peripheral Readouts. When the PPI radar display is selected for viewing, the peripheral readout updates with the following information (reference Figure 6-24):

1. TTG — Fly-to-point time to go
2. DTG — Fly-to-point distance to go
3. ETA — Fly-to-point estimated time of arrival
4. ALT — Current altitude

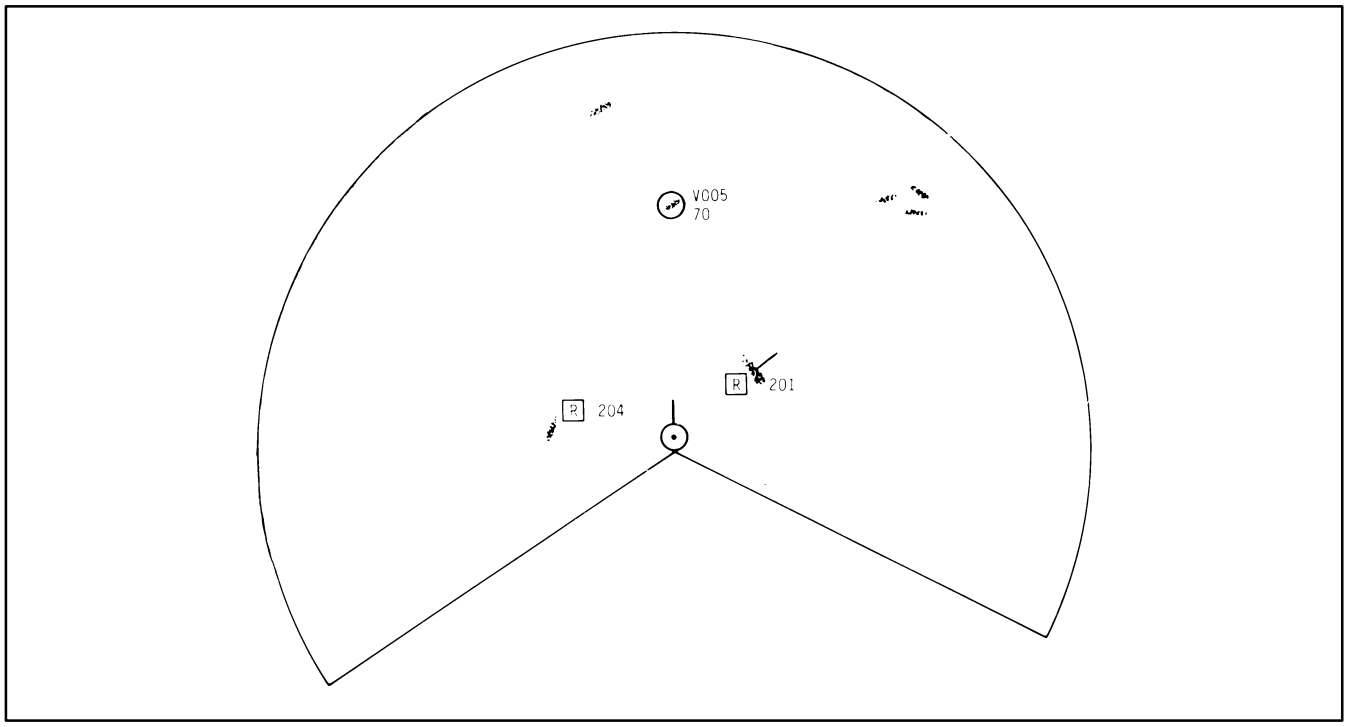

Figure 6-23. PPI Format

PPI PERIPHERAL READOUT (TACCO/SENSO/COTAC)

TIME TO GO	TTG XX XX	XXXX XX
DISTANCE TO GO	DTG XXX X	THRM OVRD
ESTIMATED TIME OF ARRIVAL	ETA XXXX XX	XXXX
AIRCRAFT ALTITUDE	ALT XXXXX	YYXXXXXX
RADAR ANTENNA TILT	TILT XXXX	FXXXX XX

TIME READ-OUT	
SCALE READ-OUT	
RADAR MODE (ALPHA-NUMERIC)	
ZULU TIME OF FROZEN PPI DISPLAY	

IMAGE PERIPHERAL READOUT (TACCO/SENSO/COTAC)

▮ TRACK NUMBER	CN XXX	XXXX XX
RANGE	RNG XXX X	THRM OVRD
TARGET ASPECT ESTIMATE	ASPECT XXX	INCL XX
AIRCRAFT ALTITUDE	ALT XXXXX	XXXXX
RADAR ANTENNA TILT	TILT XXXX	FXXXX XX

TIME READ-OUT	
ELEVATION ANGLE OF INCIDENCE	
RADAR MODE	
ZULU TIME OF EXPANDED FROZEN IMAGE	

S3AAB1.1-F0529

Figure 6-24. PPI/Image Peripheral Readouts

5. TILT — Tilt of antenna

6. Current radar range scale

7. Current radar processing mode

8. F — Time of frozen PPI display during minimum scan operations

9. THRM OVRD — Displayed if thermal shutdown override is active.

The PPI/B-scan format is available in periscope, navigation/weather avoidance, and surface search modes. Using this format centers the PPI scan on the display with the B-scan video displayed in the upper right corner (Figure 6-25). The B-scan has an azimuth of 22.5° and a size of either 2 or 4 nm dependent on radar mode selected. Periscope utilizes the 2 nm window and navigation/weather and surface search modes utilize the 4 nm window. This feature allows the operator to view a PPI scan with the higher resolution of B-scan to resolve closely spaced targets at long ranges.

In the image mode, two range versus Doppler display formats are available to the operator to assist in the interpretation of image contacts. When the image mode is selected, image peripheral readout is displayed to the operator. The peripheral readout contains the following data (Figure 6-24):

1. TN — Track number of multifix track symbol hooked

2. RNG — Range

3. ASPECT — Target aspect estimate

4. ALT — Current altitude

5. TILT — Current antenna tilt

6. Current system time

7. INCL — Elevation angle of incidence

8. F — Time of frozen image

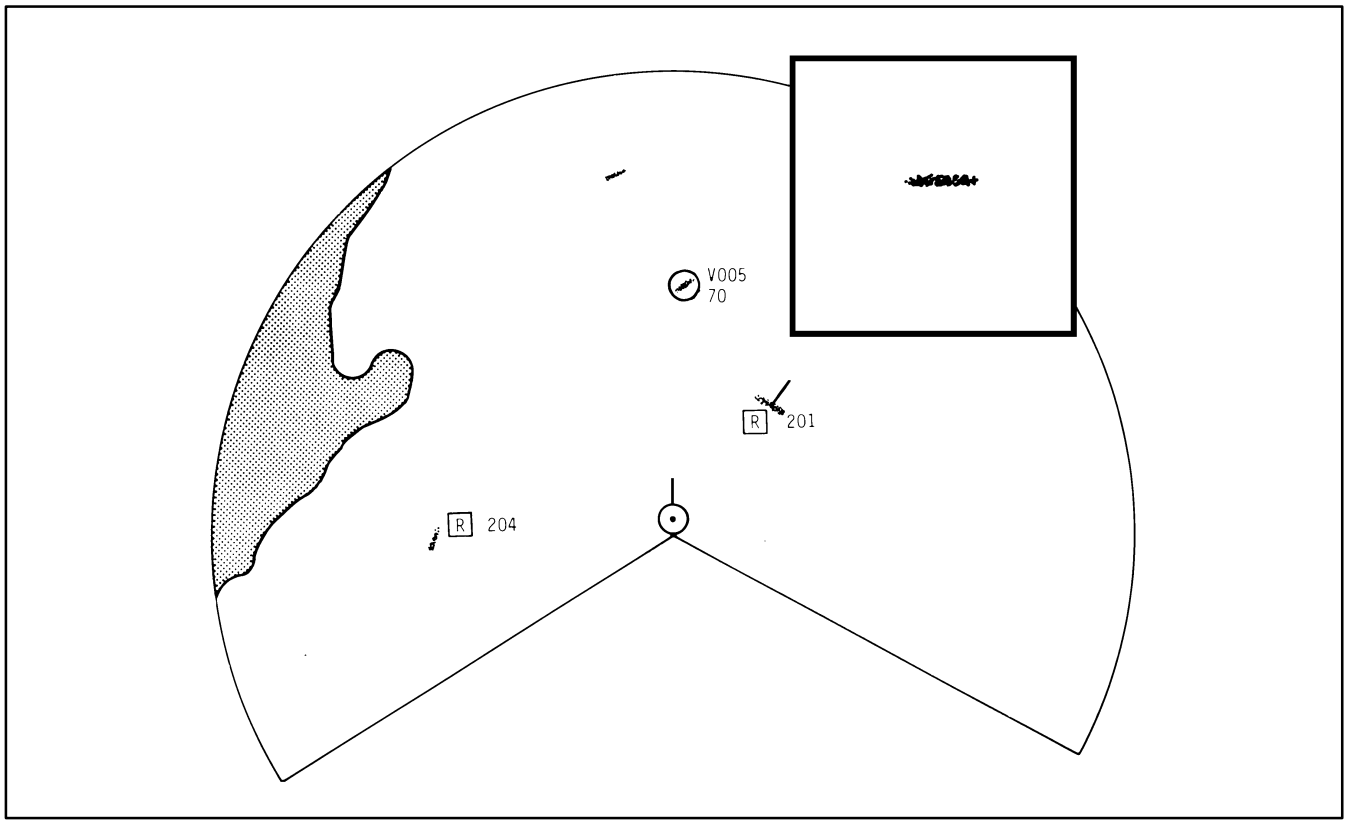

Figure 6-25. PPI/B-Scan Format

9. Current radar mode selected
10. THRM OVRD — Present if thermal shutdown override is selected.

Four image display (Figure 6-26) allows the operator to view a target from several different perspectives. It is important to point out that the four image format is not used to view four separate targets, but rather a single target from four separate aspect angles.

Four image/A-scan display (Figure 6-27) incorporates the use of a range versus amplitude A-scan display in conjunction with the four image display. While it is not possible to classify targets using A-scan presentation, the A-scan does allow the operator a means to perform azimuth tracking and provides an indication of the target signal-to-noise ratio.

The A-SCAN SHIFT option select switch enables the operator to move the A-SCAN window across the entire 512-cell processing area to view contacts that are larger than 1,280 feet.

Single image display (Figure 6-28) presents a target displayed across the entire display area. It is normally used to display a frozen target allowing the operator to perform classification procedures. This format may also be used as a dynamic display, showing target movement, to further assist in the target interpretation process.

Single image/A-scan display (Figure 6-29) enables the operator to view A-scan video in conjunction with the single image.

6.2.16 B-Scan Autotrack Window. The SDC generates symbology to indicate the limits of the auto track window. The SDC produces the autotrack window to indicate the autotrack patch area in both the acquisition and track window display.

6.2.17 Single Target Automatic Tracking. The automatic target tracking capability functions only during radar modes that utilize a rotating antenna.

When the autotrack function is enabled, the operator designates a target for automatic tracking. The function is normally used in conjunction with the B-scan window, but may be utilized anytime the antenna is scanning. When the autotrack function is enabled with B-scan enabled, the B-scan displays an autotrack window. This window begins as an acquisition window with a 5.6° azimuth and either a 3,038- or 6,076-foot window size (dependent on radar mode selected). Periscope mode is 3,038 feet and navigation/weather or surface search navigation mode is 6,076 feet. The

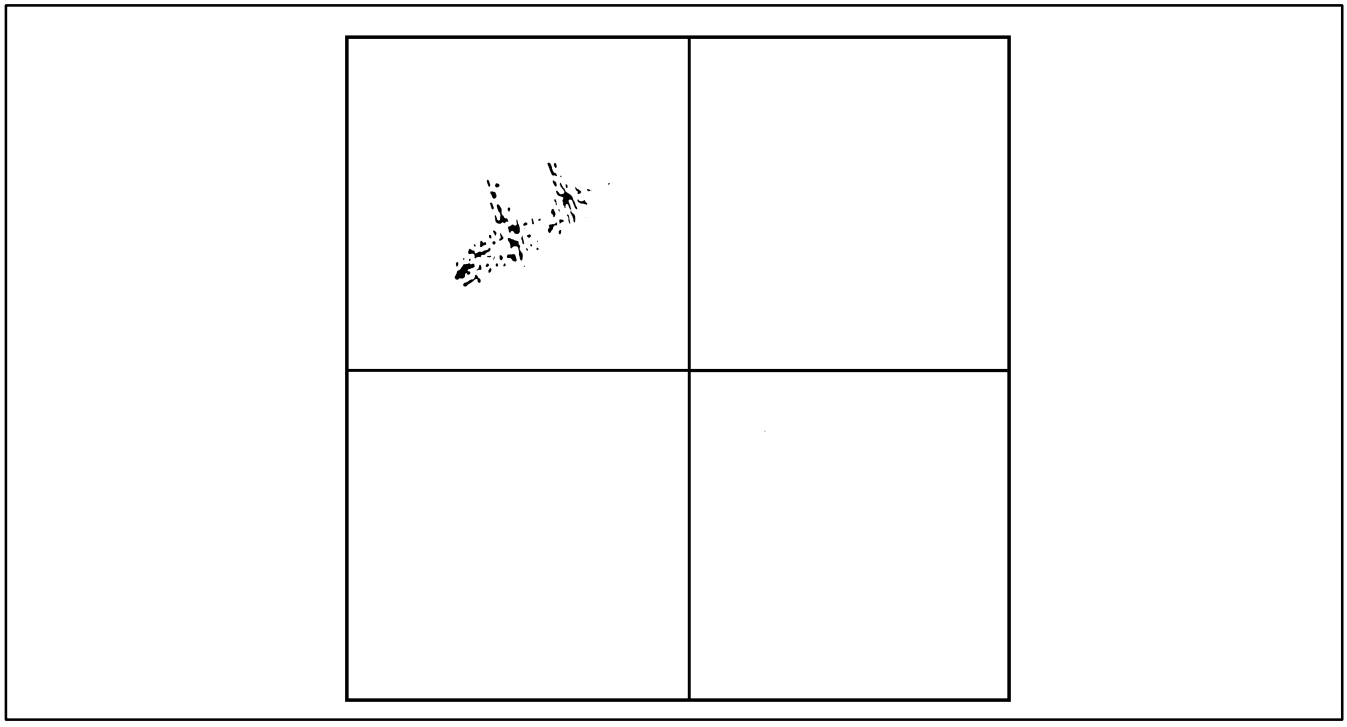

Figure 6-26. Four Image Display

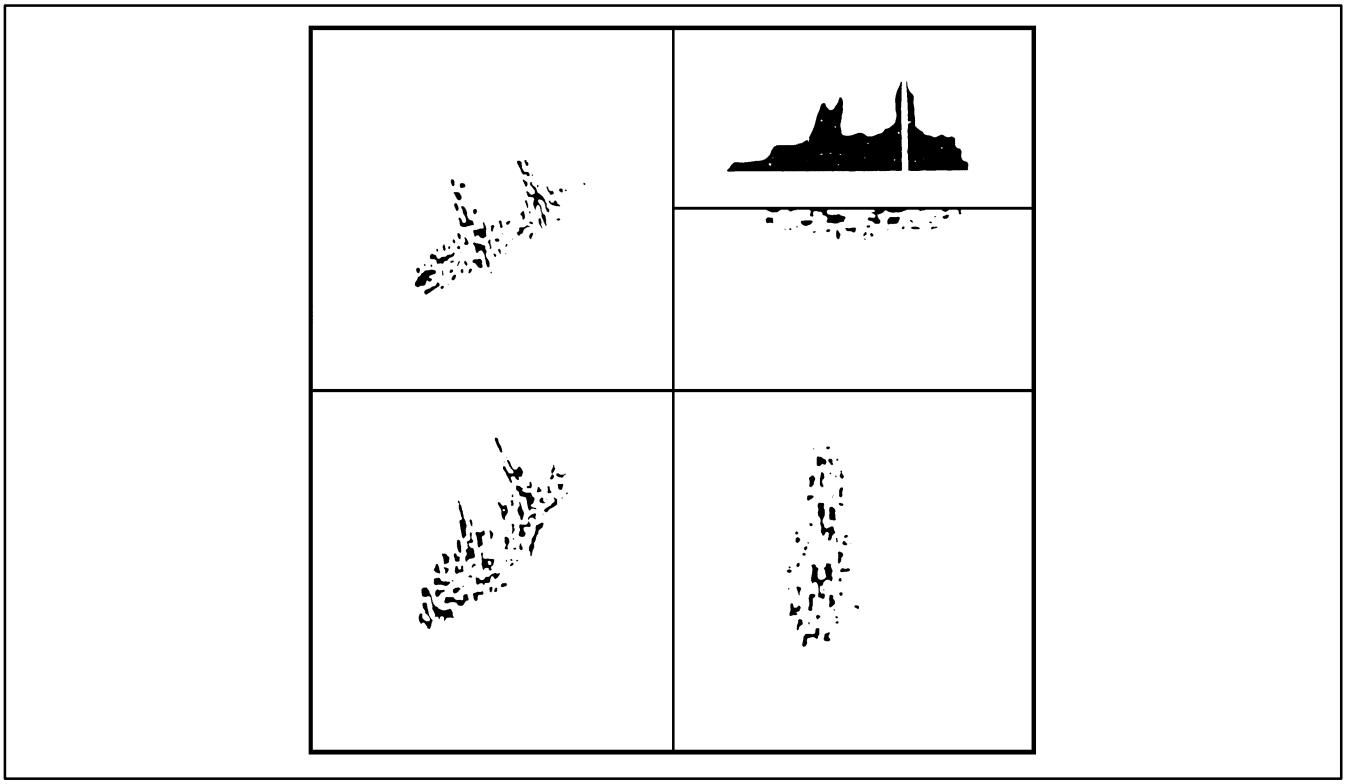

Figure 6-27. Four Image/A-Scan Display

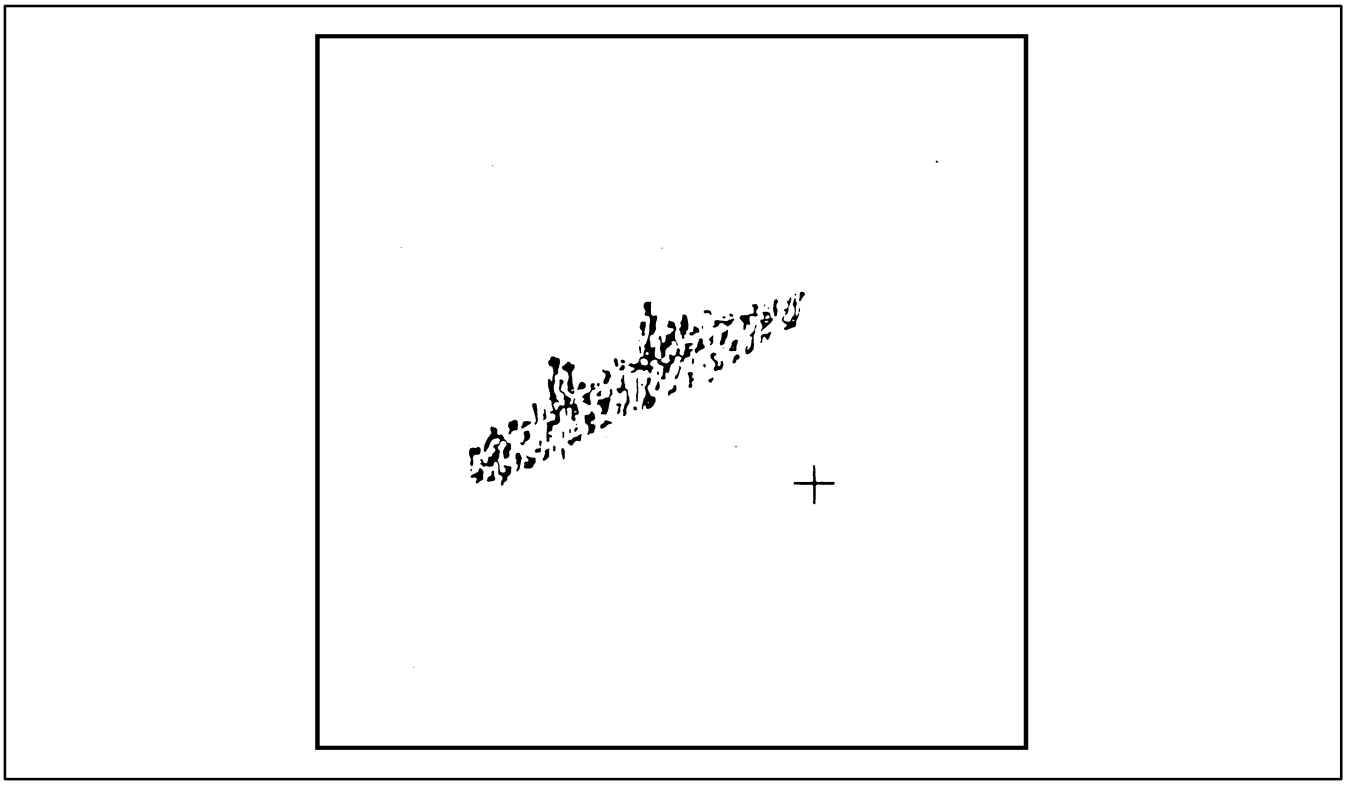

Figure 6-28. Single Image Display

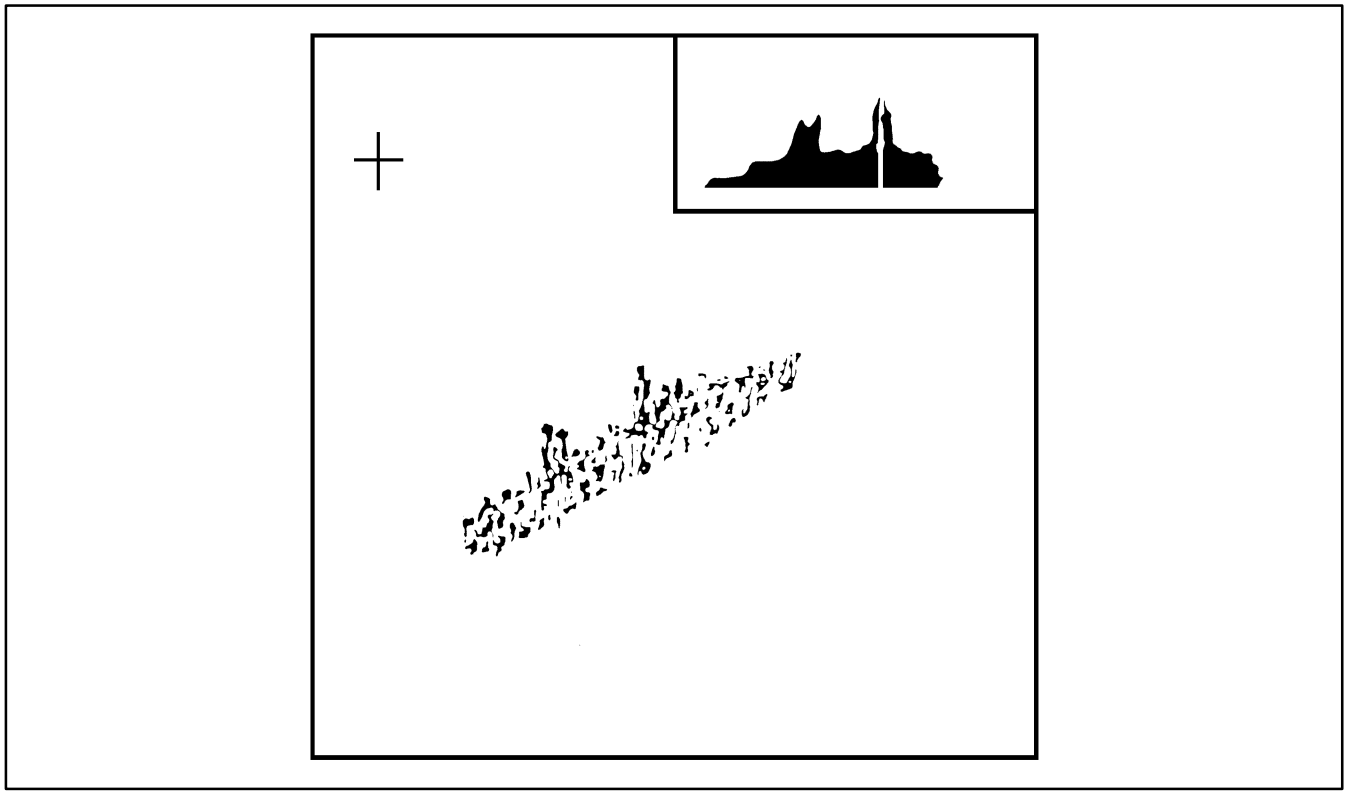

Figure 6-29. Single Image/A-Scan Display

autotrack window decreases in size (1,519 or 3,038 feet) and becomes centered on the target once the radar is locked on. This also disables trackball movement of the TDS symbol on the PPI but allows trackball control of the autotrack window.

6.2.18 Test Pattern Displays. The scan converter test patterns are used to evaluate scan converter operation. The test pattern displayed will depend on the mode and type of display selected for viewing. The test patterns selectable are shown in Figures 6-30 through 6-35.

6.2.19 Radar Operation. The operator has the capability of operating the radar in either the on-line or off-line configuration.

WARNING

The radar shall be secured during inflight refueling operations.

WARNING

- Proper safety shall be exercised by flightcrews during close formation flying within 250 feet.
- Observe the following radiation hazard distances to prevent fire or personnel injury during ground operations:

	Full Power	Dummy Load
Fueling Equipment	250 feet	0
Fuel tanks	250 feet	0
Personnel	250 feet	0

The on-line configuration (OLCU to INCOS) is considered the normal mode of operation and provides the operator with control over such functions as operating modes, display formats, radar parameters, antenna scan parameters, entering fixes, and target classification functions.

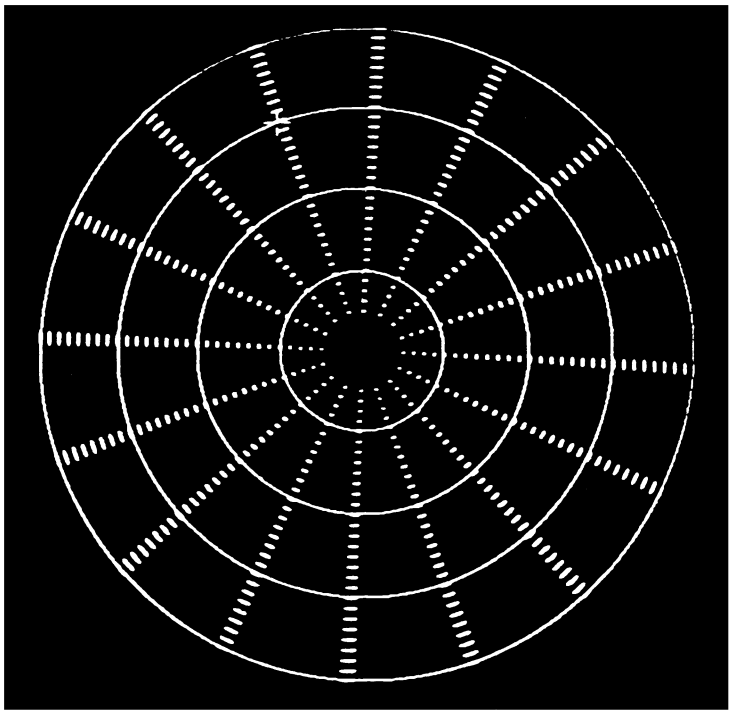

Figure 6-30. Periscope Mode Threshold Processing Test Pattern

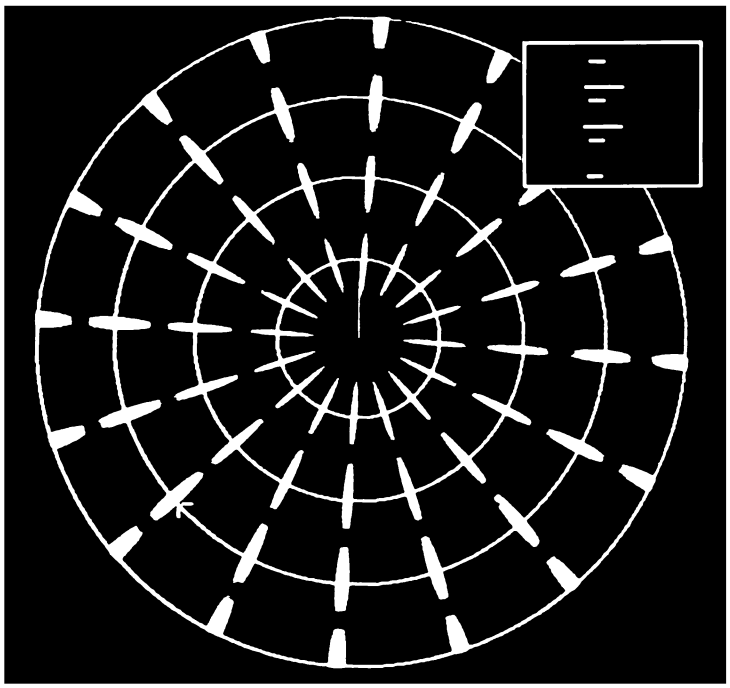

Figure 6-31. Periscope Mode Amplitude Processing with B-Scan Test Pattern

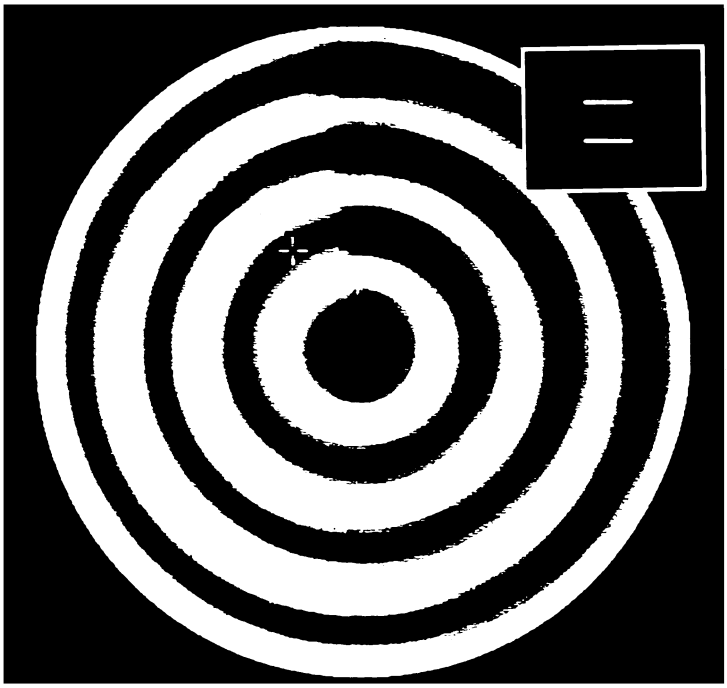

Figure 6-32. Navigation/Weather Mode with B-Scan Test Pattern

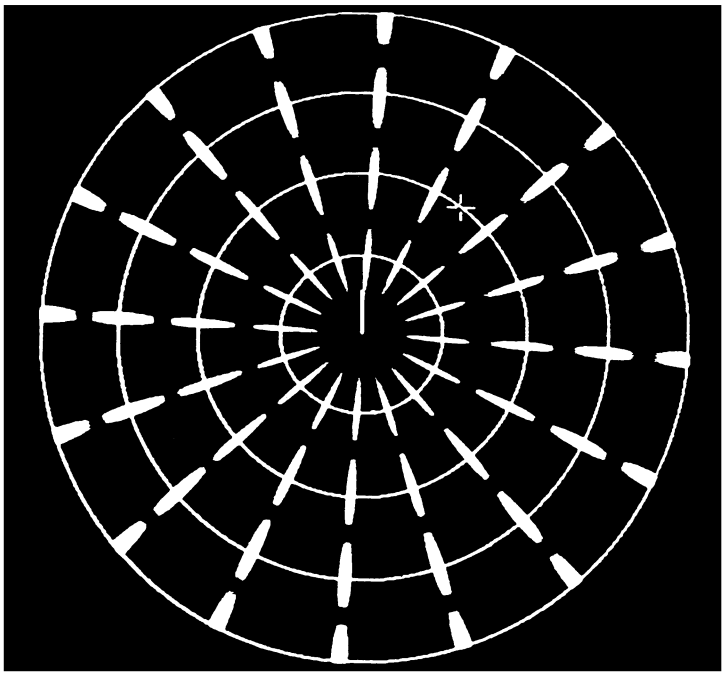

Figure 6-33. Surface Search Mode Amplitude Processing Test Pattern

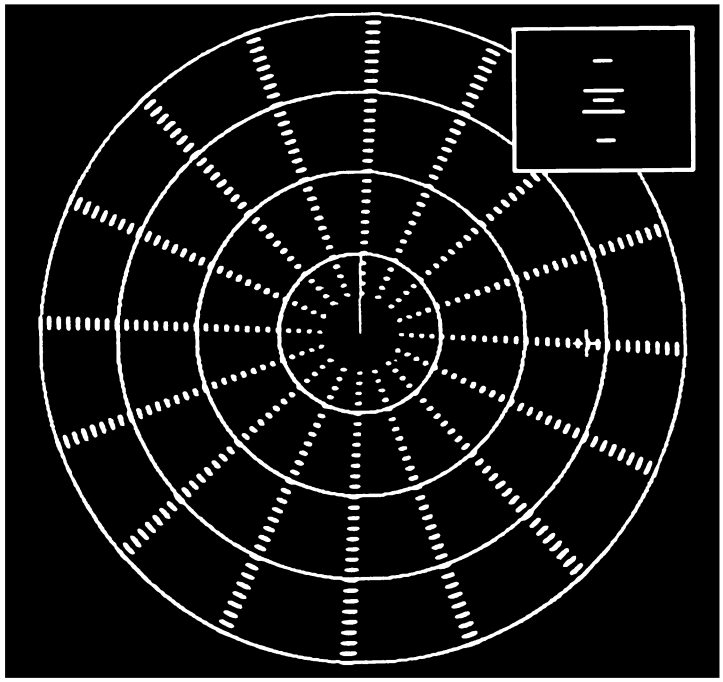

Figure 6-34. Surface Search Mode Threshold Processing with B-Scan Test Pattern

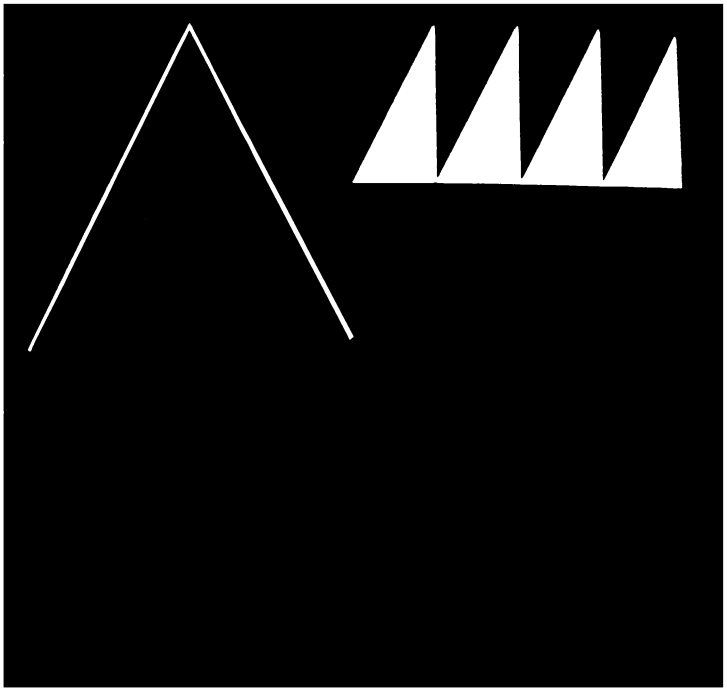

Figure 6-35. Image Mode A-Scan Test Pattern

Control selections enable the operator to configure the system to match the tactical and environmental conditions as follows:

1. Optimum navigation and weather avoidance
2. Optimum surface search
3. ISAR imaging and target classification
4. Automatic target tracking
5. Enhanced jamming resistance.

The operator has an off-line capability available for degraded operation. When operating in the off-line configuration (OLCU to RAD), the operator is restricted to the navigation/weather avoidance mode. The off-line configuration should be utilized primarily as a backup mode. The OLCU controls the following:

1. Transmitter standby selection
2. Transmitter radiate selection
3. PPI range scale selection
4. Receiver gain selection
5. Antenna tilt selection.

During off-line operation when the OLCU is in STBY, the following conditions are selected and maintained by the RIU, and are not under the control of the OLCU:

1. Radar is in standby, high PRF, no high voltage (HV), and no RF.
2. Antenna is locked in at selected tilt settings.
3. Antenna rotates at 6 rpm.
4. No target designator symbol is present.

During off-line operation when in the RAD position, the following conditions are selected and maintained by the RIU and are not under the control of the OLCU:

1. Radar operation is set to the navigation/weather avoidance mode.
2. Video selected is radar/IFF.
3. Range heading mark intensity is set to a predetermined level.
4. Antenna rotates 360° at 6 rpm.
5. No ISAR, B-scan, or TDS functions are available.
6. IFF gate is on except for bulkhead blanking.
7. Antenna is stabilized for pitch and roll.
8. PPI is heading referenced.
9. All other radar system controls are appropriately preset to accomplish the radar navigation/weather avoidance operation.

Note

- Tilt, range scale, and receiver gain functions are controlled by the operator through the OLCU.
- The UDG must be on for off-line radar video to be available to the MPDs.

6.2.20 RDR A Matrix

COTAC
TACCO
SENSO

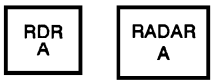

RDR A
RADAR A

PURPOSE:

Displays option select function legends associated with the RDR A (COTAC mode) or RADAR A (TACCO mode).

PREREQUISITE:

None.

PROCEDURE:

1. Press RDR A (lights amber), RADAR A (TACCO).
   a. RADAR A option select function legends are displayed in the upper half of the TACCO matrix A option select switches.

DSPL PPI	SEL MODE	CONTIN SCAN	ERASE	SET PRMTR
DSPL IMAGE	A/B SCAN	MIN SCAN	FREEZE	ENTER FIX

b. RDR A option select function legends are displayed in the lower half of the COTAC matrix A option select switches.

DEACTIVATION:

1. RDR A, RADAR A (TACCO) matrix is deactivated when another matrix select switch is pressed that requires replacing the option select legends.

DSPL PPI	SEL MODE	CONTIN SCAN	ERASE	SET PRMTR	AUTO TRK
DSPL IMAGE	A/B SCAN	MIN SCAN	FREEZE	ENTER FIX	ANT CONT

2. Deactivation result:

a. RDR A, RADAR A (TACCO) option select function legends are replaced by option select function legends associated with another matrix select.

6.2.20.1 DSPL PPI Option

COTAC
TACCO
SENSO

DSP PPI

RDR A
RADAR A

PURPOSE:

Provides operator viewing of the scan converted PPI video. The display also consists of the PPI or PPI/B-scan format depending upon the format last selected.

PREREQUISITES:

1. RDR A (COTAC) or RADAR A (TACCO) is active.

2. RADAR warmup cycle is complete.

3. A RADAR REINIT had been completed following system utilization to get the radar established as warmup is completed.

PROCEDURE:

1. Press DSPL PPI (lights amber).

a. The following options become available at the controlling operator's station:

(1) ERASE

(2) A/B SCAN

(3) CONTIN SCAN

(4) MIN SCAN

(5) SET PRMTR

(6) SEL MODE

(7) IFF ONLY

(8) ANT CONT

(9) ENTER FIX.

b. If DSPL IMAGE was active, the following options became unavailable:

(1) EXPAND

(2) A SCAN SHIFT

(3) REPOSN CURSOR

(4) CLASS AIDS

(5) FREEZE

(6) ISAR STAE.

c. If the last PPI display was PPI/B-scan, the A/B SCAN option becomes active.

d. Antenna tilt is initialized to the following values:

AIRCRAFT ALTITUDE (feet)	PPI RANGE SCALE (nm)					
	8	16	32	64	128	200
0 to 1,000	0°	0°	0°	0°	0°	0°
1,000 to 5,000	–0°	0°	0°	0°	0°	0°
5,000 to 10,000	–8°	–4°	–2°	–1°	0°	0°
10,000 to 20,000	–15°	–15°	–8°	–4°	–2°	0°
20,000 to 30,000	–15°	–15°	–15°	–8°	–4°	0°
over 30,000	–15°	–15°	–15°	–6°	–3°	–2°

e. Pressing DSPL PPI or selection of a nonradar function at the noncontrolling station causes the DSPL PPI to change from amber to green and all other radar options at the requesting station become unavailable.

f. Pressing DSPL PPI or selection of a nonradar function at the controlling station deactivates all radar functions and the following functions become available at all other stations:

(1) DSPL PPI

(2) MIN SCAN

(3) SEL MODE

(4) SET PRMTR.

DEACTIVATION:

1. DSPL PPI is deactivated when one of the following occurs:

a. DSPL PPI is pressed when amber.

b. Activation of another mode other than radar.

c. Activation of the DSPL IMAGE function.

2. Deactivation result:

a. DSPL PPI changes from amber to green.

6.2.20.2 SEL MODE Option

COTAC
TACCO
SENSO

SEL MODE

RDR A
RADAR A

PURPOSE:

Provides the operator with selection of the following radar modes:

1. Off
2. Standby
3. Periscope
4. Navigation/weather
5. Surface search.

Note

SEL MODE function is available to all stations when there is no controlling operator. If a controlling operator has been established, this function is available only to the controlling operator.

PREREQUISITES:

1. RDR A or RADAR A matrix is active.
2. Warmup cycle is complete.

PROCEDURE:

1. Press SEL MODE (lights amber).

a. The following cue appears:

SEL MODE
1 PERISCOPE
2 NAVIGATION-WEATHER
3 SURFACE SEARCH
4 STANDBY
5 OFF

2. Respond to the SEL MODE cue.

a. If decision 1 is selected, proceed to step 3.

b. If decision 2 is selected, proceed to step 4.

c. If decision 3 is selected, proceed to step 5.

d. If decision 4 is selected, proceed to step 6.

e. If decision 5 is selected, proceed to step 7.

3. Press ENTER.

a. If the current radar mode is off:

(1) Radar is set to the standby mode.

b. If CONTIN SCAN or MIN SCAN is active:

(1) Radar is set to the periscope mode.

(2) ENTER FIX option becomes available.

c. If sector scan is currently set to a 0°:

(1) Radar is set to a 20° sector scan mode.

d. If the current PPI range scale is greater than 32 nm:

(1) Radar is set to the 32 nm scale.

4. Press ENTER.

a. If the current radar mode is off:

(1) Radar is set to the standby mode.

b. If CONTIN SCAN or MIN SCAN is active:

(1) Radar is set to navigation/weather mode.

(2) ENTER FIX option becomes available.

5. Press ENTER.

a. If the current radar mode is off:

(1) Radar is set to the standby mode.

b. If CONTIN SCAN or MIN SCAN is active:

(1) Radar is set to the surface search mode.

(2) ENTER FIX option becomes available.

6. Press ENTER.

a. If the current radar mode is off:

(1) Radar is set to the standby mode.

b. DSPL PPI, MIN SCAN, and SEL MODE become available.

7. Press ENTER.

a. Radar is set to off.

b. SEL MODE becomes available.

Note

Radar will require a new warmup cycle (up to 5 minutes).

DEACTIVATION:

1. SEL MODE is deactivated when one of the following occur:

a. SEL MODE is pressed when amber.

b. Activation of another function requiring use of the cueing area.

c. Deactivation of the DSPL PPI or DSPL IMAGE options.

d. Pressing SKIP CUE in response to the SEL MODE cue.

2. Deactivation results:

a. SEL MODE changes from amber to green.

b. SEL MODE cue is removed from the display.

6.2.20.3 CONTIN SCAN Option

COTAC
TACCO
SENSO

CONTIN SCAN

RDR A
RADAR A

PURPOSE:

Provides the controlling operator with the capability of displaying continuous scan or continuous image video on the display.

PREREQUISITES:

1. RDR A (COTAC) or RADAR A (TACCO) matrix is active.

2. DSPL PPI or DSPL IMAGE is active.

PROCEDURE:

1. Press CONTIN SCAN (lights amber).

   a. If the current radar display mode is a PPI mode the following options become available:

      (1) DSPL IMAGE

      (2) AUTO TRK.

   b. If the current radar mode is surface search, the AREA SRCH and MULTI FIX options (SCH matrix and RDR matrix) become available.

      (1) FREEZE

      (2) ISAR STAE

      (3) A-SCAN SHIFT (if the A/B SCAN option is active)

      (4) REPOSN CURSOR (if the A/B SCAN option is active).

DEACTIVATION:

1. CONTIN SCAN is deactivated when one of the following occurs:

   a. CONTIN SCAN is pressed when amber.

   b. Activation of the scan converter pattern.

   c. Selection of the standby or OFF radar mode.

   d. Deactivation of the DSPL IMAGE or DSPL PPI options.

   e. Freezing of the fourth image display quadrant.

2. Deactivation results:

   a. CONTIN SCAN changes from amber to green.

   b. RF radiation is inhibited.

6.2.20.4 ERASE Option

COTAC
TACCO
SENSO

ERASE

RDR A
RADAR A

PURPOSE:

Provides the controlling operator with the capability of initiating a fast erase of the digital scan converter video when in a PPI mode, or selectively clearing an individual quadrant or all four quadrants of the digital scan converted video when in the image mode.

PREREQUISITES:

1. RDR A (COTAC) or RADAR A (TACCO) matrix is active.

2. DSPL PPI or DSPL IMAGE option is active.

PROCEDURE:

1. Press ERASE (lights amber).

   a. If DSPL PPI option is active, the following occurs:

      (1) Scan converter's video is erased.

      (2) Current Zulu time is saved.

      (3) Zulu time of the last freeze is cleared.

   b. If DSPL IMAGE option is active, the following cue appears:

      ERASE IMAGE
      1 UPPER LEFT
      2 UPPER RIGHT
      3 LOWER LEFT
      4 LOWER RIGHT
      5 ALL QUADRANTS

2. Respond to the ERASE IMAGE cue.

   a. Press numerics on the keyset to select the desired number.

   b. If decision 1, 2, 3, or 4 is selected, proceed to step 3.

   c. If decision 5 is selected, proceed to step 4.

3. Press ENTER.

   a. The selected quadrant is cleared.

   b. FREEZE option becomes available.

4. Press ENTER.

   a. All quadrants are cleared.

   b. FREEZE option becomes available.

DEACTIVATION:

1. ERASE is deactivated when one of the following occurs:

   a. ERASE is pressed when amber.

   b. Activation of another function requiring the use of the cueing area.

   c. Deactivation of DSPL IMAGE or DSPL PPI by the controlling operator.

2. Deactivation results:

   a. ERASE changes from amber to green.

   b. ERASE IMAGE cue is removed from the display (if DSPL IMAGE option is active).

6.2.20.5 SET PRMTR Option

COTAC
TACCO
SENSO

SET PRMTR

RDR A
RADAR A

PURPOSE:

Changes or views radar parameters.

PREREQUISITES:

1. RDR A (COTAC) or RADAR A (TACCO) matrix is active.

2. Operator is the radar controller.

PROCEDURE:

1. Press SET PRMTR (lights amber).

   a. RADAR PARAMETERS tableau is displayed. (Refer to Figure 6-36.)

   b. The following cue appears:

```
SEL RDR 1
1 FAR PPI      6 APER
2 FAR B        7 XMTR LOAD
3 RCVR GAIN
4 VID THRESH
5 VID GAIN       OPTNL
```

2. Respond to the SEL RDR 1 cue.

   a. If decision 1 is selected, proceed to step 3.

   b. If decision 2 is selected, proceed to step 7.

   c. If decision 3 is selected, proceed to step 10.

   d. If decision 4 is selected, proceed to step 13.

   e. If decision 5 is selected, proceed to step 16.

   f. If decision 6 is selected, proceed to step 19.

   g. If decision 7 is selected, proceed to step 22.

   h. If SEL RDR 2 is to be displayed, proceed to step 25.

3. Press ENTER.

   a. The following cue appears (if in the periscope or surface search modes).

```
SEL PPI FAR
+ INCR
– DECR
    OPTNL
```

Note

Attempts to adjust PPI FAR while radar is in the navigation/weather avoidance, or image mode results in display of the NOT AVAIL alert.

4. Respond to SEL PPI FAR cue.

5. Press + or – on the keyset or if the current displayed PPI FAR is satisfactory, proceed to step 6.

6. Press SKIP CUE.

   a. The following cue appears:

```
SEL RDR 1
1 FAR PPI      6 APER
2 FAR B        7 XMTR LOAD
3 RCVR GAIN
4 VID THRESH
5 VID GAIN       OPTNL
```

   b. Perform procedures in step 2.

APS-137					
1. RADAR PARAMETERS	RANGE	PERI	NAV/WX	S/S	CONDITION
2. VID THRESH	0-6	(4)	2	(3)	THRESHOLD ONLY
3. RCVR GAIN	1-8	5	(5)	5	
4. FAR PPI	1-7	(3)	5	(3)	THRESHOLD ONLY
5. FAR B-SCAN	1-7	(2)	3	(3)	THRESHOLD/ AMPLITUDE
6. XMTR LOAD	ANT, DUMMY				
7. APERTURE	1X, 2X, 4X	2X	2X	2X	IMAGE MODE ONLY
8. TDS INTENS	OFF-7	2	2	2	
9. RNG-HD MARKS	OFF-7	1	1	1	
10. HDG MK	AVAIL. INHB				
12. VID GAIN	0-7	(4)	4	(4)	AMP. ONLY
13. AMPTD PROC	ON, OFF	(ON)	ON	(ON)	
	( ) MODIFIABLE PARAMETER				

Figure 6-36. APS-137 Radar Parameters

7. Press ENTER.

   a. The following cue appears (if in the periscope or surface search modes):

      SEL B-SCAN FAR
      + INCR
      – DECR
      OPTNL

8. Respond to SEL B-SCAN FAR cue.

9. Press + or – on the keyset or if the current B-SCAN FAR is satisfactory, return to step 6.

10. Press ENTER.

    a. The following cue appears (if in the navigation/weather avoidance mode):

       SEL RCVR GAIN
       + INCR
       – DECR
       OPTNL

Note

Attempts to adjust the receiver gain while the radar is in other than the navigation/ weather avoidance mode results in display of the NOT AVAIL alert.

11. Respond to the SEL RCVR GAIN cue.

12. Press + or – on the keyset or if the current displayed receiver gain is satisfactory, return to step 6.

13. Press ENTER.

    a. The following cue appears (if in the periscope or surface search mode), and threshold processing is active:

       SEL THRESHOLD
       + INCR
       – DECR
       OPTNL

Note

Attempts to adjust the video threshold while the radar is in the navigation/weather avoidance or image mode results in display of the NOT AVAIL alert.

14. Respond to the SEL THRESHOLD cue.

15. Press + or – on the keyset or if the current displayed video thresholds is unsatisfactory, return to step 6.

16. Press ENTER.

    a. The following cue appears (if in the periscope or surface search modes):

    SEL VIDEO GAIN
    + INCR
    – DECR
    OPTNL

Note

Attempts to adjust the video gain while the radar is in the navigation/weather avoidance or image mode results in display of the NOT AVAIL alert.

17. Respond to the SEL VIDEO GAIN cue.

18. Press + or – on the keyset or if the current displayed video threshold is satisfactory, return to step 6.

19. Press ENTER.

    a. The following cue appears (if in the image mode):

    SEL APERTURE
    1 1X
    2 2X
    3 4X
    OPTNL

Note

Attempts to adjust the aperture while the radar is not in the image mode results in display of the NOT AVAIL alert.

20. Respond to the SEL APERTURE cue.

21. Press 1, 2, or 3 on the keyset or if the current displayed aperture is satisfactory, return to step 6.

22. Press ENTER.

    a. The following cue appears:

    SEL XMTR LOAD
    1 ANTENNA
    2 DUMMY LOAD
    OPTNL

Note

The XMTR LOAD selection does not secure all RF emissions via dummy load. Spurious RF emissions will be prevented by placing the OLCU control switch in STBY or OFF.

23. Respond to the SEL XMTR LOAD cue.

24. Press 1 or 2 on the keyset or if the current transmitter load selection is satisfactory, return to step 6.

25. Press SKIP CUE.

    a. The following cue appears:

    SEL RDR 2
    1 TDS INT
    2 RNG+HDG MARKS
    3 PATTERN
    4 AMP PROC
    5 SHUTDN OVRD
    6 ALIGN TDS
    OPTNL

26. Respond to the SEL RDR 2 cue.

    a. If decision 1 is selected, proceed to step 27.

    b. If decision 2 is selected, proceed to step 31.

    c. If decision 3 is selected, proceed to step 37.

    d. If decision 4 is selected, proceed to step 44.

    e. If decision 5 is selected, proceed to step 47.

    f. If decision 6 is selected, proceed to step 48.

    g. To return to the SEL RDR 1 cue, return to step 6.

27. Press ENTER.

    a. The following cue appears:

    SEL INT
    ENTER
    1 ON + INCR
    2 OFF – DECR
    OPTNL

28. Respond to the SEL INT cue.

    a. If decision 1 is selected, proceed to step 29.

    b. If decision 2 is selected, proceed to step 30.

29. Press ENTER.

    a. The TDS symbol is displayed at the last selected intensity level.

30. Press ENTER.

    a. The TDS symbol is removed from the display.

31. Press ENTER.

    a. The following cue appears:

    SEL RNG+HDG MARKS
    ENTER
    1 ON + INCR
    2 OFF – DECR
    3 HDG AVAIL
    4 HDG INHB OPTNL

32. Respond to the SEL RNG + HDG MARKS cue.

    a. If decision 1 is selected, proceed to step 33.

    b. If decision 2 is selected, proceed to step 34.

    c. If decision 3 is selected, proceed to step 35.

    d. If decision 4 is selected, proceed to step 36.

33. Press ENTER.

    a. The range and heading markers are displayed at the current intensity level.

    b. The RADAR PARAMETERS tableau is updated to reflect the operator's selection.

34. Press ENTER.

    a. The range and heading markers are removed from the display.

    b. The RADAR PARAMETERS tableau is updated to reflect the operator's selection.

35. Press ENTER.

    a. The heading marker is only displayed at the current intensity level.

    b. The RADAR PARAMETERS tableau is updated to reflect the operator's selection.

36. Press ENTER.

    a. The heading marker is removed from the display.

    b. The RADAR PARAMETERS tableau is updated to reflect the operator's selection.

37. Press ENTER.

    a. The following cue appears:

    SEL TEST PATTERN
    1 PERISCOPE
    2 NAV/WEATHER
    3 SURFACE SEARCH
    4 IMAGE
    5 OFF

38. Respond to the SEL TEST PATTERN cue.

    a. If decision 1 is selected, proceed to to step 39.

    b. If decision 2 is selected, proceed to step 40.

    c. If decision 3 is selected, proceed to step 41.

    d. If decision 4 is selected, proceed to step 42.

    e. If decision 5 is selected, proceed to step 43.

39. Press ENTER.

    a. The continuous display function is deactivated.

    b. The minimum scan function is deactivated.

    c. The radar is placed in the periscope mode.

    d. The periscope mode test pattern is displayed.

40. Press ENTER.

    a. The continuous display function is deactivated.

    b. The minimum scan function is deactivated.

c. The radar is placed in the navigation/weather avoidance mode.

d. The navigation/weather avoidance mode test pattern is displayed.

41. Press ENTER.

a. The continuous display function is deactivated.

b. The minimum scan function is deactivated.

c. The radar is placed in the surface search mode.

d. The surface search mode test pattern is displayed.

42. Press ENTER.

a. The continuous display function is deactivated.

b. The minimum scan function is deactivated.

c. The radar is placed in the image mode.

d. The image mode test pattern is displayed.

43. Press ENTER.

a. The radar is placed in the standby mode.

b. The test pattern is removed from the display.

44. Press ENTER.

a. The following cue appears (if in the periscope or surface search mode):

SEL PROCESSING
1 AMPLITUDE
2 THRESHOLD
OPTNL

Note

Attempts to change the radar processing mode while the radar is in the navigation/ weather avoidance or image mode results in display of the NOT AVAIL alert.

45. Respond to the SEL PROCESSING cue.

46. Press 1 or 2 on the keyset.

a. A selection of 1 initiates amplitude processing.

b. A selection of 2 initiates threshold processing.

c. The RADAR PARAMETERS tableau is updated to reflect the selection.

47. Press ENTER.

a. The thermal shutdown circuitry is overridden.

WARNING

Utilizing the shutdown override function for an extended period could cause equipment damage.

48. Press ENTER.

a. The following cue appears:

SEL ALIGN
1 ALIGN TDS
2 RESET TDS BIAS

OPTNL

49. Respond to the SEL ALIGN cue.

a. Press 1 or 2 on the keyset.

b. If decision 1 is selected, proceed to step 50.

c. If decision 2 is selected, proceed to step 51.

Note

- If TDS INT is turned off or CONT SCAN is not active, responding to the ALIGN TDS cue will display a NOT AVAIL alert and the SEL RDR 2 cue set will redisplay.

- A TDS ALIGN must be performed at each RADAR operating station. A bias applied at one station does not apply to the other stations. The numeric bias values at each of the three controlling stations may be drastically different from

each other depending on the state of the respective MPD hardware.

50. Press ENTER.

    a. The ALIGN TDS function is activated.

        (1) The CONTIN SCAN function will deactivate and the switch will become green lit.

        (2) An alignment symbol (a stationary hook symbol) will appear at 45° and approximately 1 inch from the center of the display.

    b. The following cue appears:

        ACTIVATE CONTIN SCAN
        POSITION TDS OVER
        ALIGNMENT SYMBOL
        PRESS ENTER

    c. Depress CONTIN SCAN.

        (1) Radar scale shifts to 32 nm.

        (2) TDS symbol is redisplayed.

Note

Radar must be in 32 nm scale while alignment is being performed. Alignments performed in any other scale will cause gross misalignments when the scale is subsequently changed to a different value.

    d. Center the TDS symbol over the alignment symbol and press ENTER.

    e. The following cue appears:

        TDS DISPLAY BIAS
        X±NNN
        Y±NNN

        1 ACCEPT
        2 REJECT

    f. Enter 1 if given bias is acceptable.

        (1) The CONTIN SCAN function will deactivate and the switch will become green lit.

    g. Enter 2 if bias is too large to enhance tracking capabilities.

Note

- Bias is applied during AUTOTRACK operations. The TDS will jump to the strongest point of target return when LOCK ON is achieved, and the hook, will reposition to the new TDS position.
- Any X or Y value that is greater than ±300 may be too severe to adequately align the TDS symbol.

    h. Depress CONTIN SCAN to resume radar scan.

51. Press ENTER.

    a. The RESET TDS BIAS function clears any display bias previously entered.

Note

If TDS ALIGN is terminated before the cueing sequence has been completed, TDS INT defaults to OFF and must be turned back on to make the ALIGN TDS function available.

DEACTIVATION:

1. SET PRMTR is deactivated when one of the following occurs:

    a. Pressing SET PRMTR switch when amber.

    b. Relinquishing radar control.

    c. Activating another function that causes a cue to be displayed at the activating operator console.

    d. Pressing TERM CUE SEQ at the activating operator console.

    e. The radar is reinitialized.

2. Deactivation results:

    a. Cues associated with SET PRMTR are removed.

    b. SET PRMTR changes from amber to green if radar control is maintained and changes from amber to black if radar control is relinquished.

c. Amplifying readout associated with SET PRMTR is removed.

6.2.20.6 DSPL IMAGE Option

COTAC
TACCO
SENSO

RDR A
RADAR A

PURPOSE:

Provide the controlling operator with the means to display ISAR images at all active radar stations.

Allows a nonradar operator to establish radar monitor status and display ISAR images when the controlling operator is viewing images.

PREREQUISITES:

1. RDR A (COTAC) or RADAR A (TACCO) matrix is active.
2. DSPL PPI and CONTIN SCAN is active.
3. Target position is identified.

PROCEDURE:

1. Press DSPL IMAGE (lights amber).

Note

Waiting 5 seconds after autotrack "RADAR LOCK-ON" alert is displayed prior to selecting image (allows autotrack to get into fine position mode) will further enhance image acquisition.

a. If the requesting operator is the controller, the following occurs:

(1) DSPL PPI is deactivated.

(2) Current selected PPI mode is saved.

(3) SCAN converter is erased.

(4) CONTIN SCAN is activated.

(5) A/B-scan is activated.

(6) Radar is placed in the image mode.

(7) The following options become available:

(a) FREEZE

(b) EXPAND

(c) A-SCAN SHIFT (if A/B-scan option is active)

(d) REPOSN CURSOR (if A/B-scan option is active)

(e) ISAR STAE

(f) DSPL IMAGE (all radar stations).

b. If a multifix symbol was hooked prior to activation, the following occurs:

(1) Track number of the multifix is determined.

(2) Track number is displayed.

(3) Antenna position coincides with track position.

c. If the requesting station is not the controlling operator:

(1) DSPL IMAGE lights amber (requesting station).

(2) All other options at requesting station become unavailable.

(3) Display the following on peripheral readout.

(a) Current Zulu time

(b) Zulu time of each frozen quadrant

(c) Aircraft altitude

(d) Target course

(e) Target aspect

(f) Target speed

(g) Elevation angle of incidence

(h) Track number.

DEACTIVATION:

1. DSPL IMAGE is deactivated when one of the following occurs:

   a. Pressing DSPL IMAGE when amber.

   b. Pressing DSPL PPI when green.

   c. Operator activation of a display mode other than radar.

   d. Controlling operator selection of the standby or off radar modes (SEL MODE option).

2. Deactivation results:

   a. DSPL IMAGE changes from amber to green.

   b. CONTIN SCAN is deactivated.

6.2.20.7 A/B SCAN Option

COTAC
TACCO
SENSO

RDR A
RADAR A

PURPOSE:

Provides for operator selection and deselection of simultaneous PPI/B-scan or image/A-scan display.

PREREQUISITES:

1. RDR A (COTAC) or RADAR A (TACCO) matrix is active.

2. DSPL PPI option is active.

3. DSPL IMAGE option is active.

PROCEDURE:

1. Press A/B SCAN (lights amber).

   a. If the current radar mode is PPI, the PPI B-scan mode is activated.

   b. If the CONTIN SCAN option is active, the following is updated:

      (1) True bearing from the aircraft to the latitude/longitude of the center of the B-scan window.

      (2) Slant range (yards or nm) from the aircraft to the latitude/longitude of the B-scan window center.

   c. If the current radar mode is image and CONTIN SCAN is active, the following occurs:

      (1) A-scan is displayed.

      (2) A-scan SHIFT and REPOSN CURSOR become available.

DEACTIVATION:

1. A/B SCAN is deactivated when one of the following occurs:

   a. A/B SCAN is pressed when amber.

   b. Deactivation of DSPL PPI by the controlling operator.

   c. Deactivation of DSPL image by the controlling operator.

2. Deactivation results:

   a. A/B SCAN changes from amber to green.

6.2.20.8 MIN SCAN Option

COTAC
TACCO
SENSO

RDR A
RADAR A

PURPOSE:

Initiates system radiation for the minimum integration time interval when in the PPI mode (10 seconds for periscope and navigation/weather modes and 30 seconds for surface search mode).

PREREQUISITES:

1. RDR A (COTAC) or RADAR A (TACCO) matrix is active.

2. IFF ONLY option is not active.

Note

If MIN SCAN is activated while the display is in TAC PLOT the aircraft recenters, but the TAC PLOT does not rescale.

PROCEDURE:

1. Press MIN SCAN (lights amber).
   a. The PPI display is frozen (after integration period).
   b. The radar ceases to radiate (after integration period).

DEACTIVATION:

1. MIN SCAN is deactivated when one of the following occurs:
   a. Completion of minimum scan processing.
   b. MIN SCAN is pressed when amber.
   c. Deactivation of DSPL PPI by the controlling operator.
   d. Activation of IFF ONLY.
   e. Selection of off or standby radar modes.
2. Deactivation results:
   a. MIN SCAN changes from amber to green.
   b. CONTIN SCAN illuminates green.
   c. Update tracks is deactivated.
   d. Single target autotrack is deactivated.

6.2.20.9 FREEZE Option

COTAC
TACCO
SENSO

FREEZE

RDR A
RADAR A

PURPOSE:

Provides the controlling operator with the capability to freeze active ISAR images and to store up to four images on the digital scan converter for display.

PREREQUISITES:

1. RDR A (COTAC) or RADAR A (TACCO) matrix is active.
2. DSPL image option is active.
3. CONTIN SCAN option is active.

PROCEDURE:

1. Press FREEZE (lights amber).
   a. The active ISAR image is frozen and stored in the next available scan converter quadrant.

Note

The quadrant freezing order is as follows: Lower right, lower left, upper right, upper left.

DEACTIVATION:

1. After the fourth image is frozen.

6.2.20.10 ENTER FIX Option

COTAC
TACCO
SENSO

ENTER FIX

RDR A
RADAR A

PURPOSE:

Allows operator to enter, update, classify, and assign track numbers to fixes. The ENTER FIX function enters essential radar target data into the database for data extract, data link activities, and display.

PREREQUISITES:

1. RDR A (COTAC) or RADAR A (TACCO) matrix is active.
2. DSPL PPI is active.
3. Hook verify has been performed.

PROCEDURE:

1. Press ENTER FIX (lights amber).

a. The following cue appears:

ENT CNTCT NUM

XXX
OPTNL

- Where the default selection (XXX) is the next available number.
- Valid entries are 100–356.

Note

- If the operator enters a Contact Number that matches that of an existing Datum, the entry is not accepted and the INVALID ENTRY alert appears; the ENT CNTCT NUM cue is redisplayed.
- If the entered Contact Number matches that associated with another fix/track, then the hooked item is assigned the Category and Identity of the associated fix/track.

2. Press ENTER.

a. The following cue appears:

SEL CATEGORY
1 SURF
2 SUB
3 AIR
4 LAND
5 SURF UNK +

The default option is Surface Unknown.

3. Respond to the SEL CATEGORY cue.

If the operator selects 5 (SURF-UNKNOWN — the default category/identity), proceed to step 6.

4. Press ENTER.

a. The following cue appears:

SEL IDENTITY
1 FRIEND
2 HOSTILE
3 UNKNOWN +

Where the optional selection is Unknown.

5. Respond to the IDENTITY cue.

6. Press ENTER.

The radar system fix symbol is displayed at the requesting station. At all other stations a flashing fix symbol will be displayed with a type 3 ZZZZ ACK CNTCT alert. The fix is then used to update a Generated Track with the same Contact Number if one exists and is removed from the display.

Note

Radar fixes always appear under the hook symbol but because of possible misalignment, the TDS or B-scan window center symbol should be utilized to designate the target.

DEACTIVATION:

1. ENTER FIX is deactivated when one of the following occurs:

a. ENTER FIX is pressed when amber.

b. Activation of another process requiring use of the cue area.

c. Completion of activation processing.

d. Termination of the PPI processing at the controlling station.

e. Cue sequence is completed.

2. Deactivation results:

a. ENTER FIX changes from amber to green.

b. Fix symbology is presented on the MPDs upon completion of the cueing sequence.

6.2.21 RDR B Matrix

COTAC
TACCO
SENSO

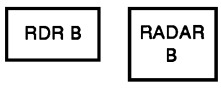

RDR B
RADAR B

PURPOSE:

Displays option select function legends associated with the RDR B (COTAC mode) or RADAR B (TACCO mode).

PREREQUISITE:

None.

PROCEDURE:

1. Press RDR B (lights amber), RADAR B (TACCO).

   a. RADAR B option select function legends are displayed in the upper half of the TACCO matrix B option select switches.

AUTO TRK	EXPAND	REPOSN CURSOR	A SCAN SHIFT	CLASS AIDS
ANT CONT	IFF ONLY	ISAR STAE	MIDCRS UPDATE	MULTI FIX

   b. RDR B option select function legends are displayed in the lower half of the COTAC matrix B option select switches.

•	EXPAND	REPOSN CURSOR	A SCAN SHIFT	CLASS AIDS	•
•	IFF ONLY	ISAR STAE	MIDCRS UPDATE	MULTI FIX	•

DEACTIVATION:

1. RDR B, RADAR B (TACCO) matrix is deactivated when another matrix select switch is pressed that requires replacing of the option select legends.

2. Deactivation results:

   a. RDR B, RADAR B (TACCO) option select function legends are replaced by option select function legends associated with another matrix select.

6.2.21.1 AUTO TRK Option

COTAC
TACCO
SENSO

[AUTO TRK]

RDR B
RADAR B

PURPOSE:

Locks on and automatically tracks a radar target in either the PPI or PPI/B-scan mode.

PREREQUISITES:

1. RDR B (COTAC) or RADAR B (TACCO) matrix is active.
2. Operator is the radar controller.
3. DSPL PPI and CONTIN SCAN are active.

PROCEDURE:

1. Move hook over active target on PPI display alerts the RIU to align the TDS to the hook when AUTO TRACK is inactive.
2. Press AUTO TRK (lights amber).

   a. If viewing PPI only:

      (1) Prior to Lock movement of the track ball will change the Radar Range and will adjust the TDS position towards or away from A/C.

      (2) When Lock On is achieved the hook position shall be set to the RIU reported TDS position.

      (3) Movement of the hook after Lock On will deactivate target Lock and reactivate the search mode that is centered on the new hook position.

   b. If viewing PPI/B-scan:

      (1) Prior to Lock movement of the track ball will change the Radar Range adjusting the TDS position towards or away from the A/C. The center of the B Scan window will be aligned with the adjusted TDS position.

      (2) When Lock On is achieved the hook position will be set to the RIU reported position for the TDS. The B Scan window patch size will be reduced and centered on the reported TDS position.

      (3) Movement of the hook after Lock On will deactivate target Lock, expand the B Scan

patch window size to the search mode and reset the TDS to the updated position of the hook.

3. The ZZZZ RADAR LOCKED-ON alert appears when the Radar has assumed that a target is present and can automatically track this target.

Note

With the RADAR LOCKED ON to a target and either a re-center on A/C or re-center on hook is performed the following occurs:

a. The origin of the tactical and PPI displays is set to the current A/C position. The auto track function is deactivated and the TDS position is recomputed and set to the hook position defined by the Radar transmitted range and bearing prior to the activation of the re-center function. AUTO TRK is reactivated with Lock normally achieved.

b. The origin of the tactical and PPI displays is set to the current hook position. The A/C and Radar origin is set to the position defined by the distance between the hook and A/C position. The TDS position is set to the hook position defined at the center of the Tactical and PPI displays. AUTO TRK is deactivated in order to set the TDS position to the hook position and then automatically reactivated with Lock normally achieved.

DEACTIVATION:

1. AUTO TRK is deactivated when one of the following occurs:

a. AUTO TRK is pressed when amber.

b. DSPL PPI is pressed when amber and AUTO TRK is active.

c. Deactivation of CONTIN SCAN or MIN SCAN.

2. Deactivation results:

a. AUTO TRK changes from amber to green.

b. RADAR LOCKED-ON alert is removed.

Note

If the last target range is greater than the display scale, the TDS will be positioned at the edge of the PPI on a bearing to the target.

6.2.21.2 EXPAND Option

COTAC
TACCO
SENSO

EXPAND

RDR B
RADAR B

PURPOSE:

Provides the controlling operator with the capability of selecting one of four ISAR images for expansion on all active radar displays.

PREREQUISITES:

1. RDR B (COTAC) or RADAR B (TACCO) matrix is active.
2. DSPL IMAGE option is active.

PROCEDURE:

1. Press EXPAND (lights amber).

a. The following cue appears:

SEL QUADRANT
1 UPPER LEFT
2 UPPER RIGHT
3 LOWER LEFT
4 LOWER RIGHT

2. Respond to the SEL QUADRANT cue.
3. Press ENTER.

a. The selected quadrant is expanded.

b. If CONTIN SCAN option is not active the peripheral information is updated with elevation angle, antenna tilt angle, and target range and aspect angle of the frozen image, plus time of quadrant freeze and track number of the expanded image.

c. The SEL QUADRANT cue remains displayed.

DEACTIVATION:

1. EXPAND is deactivated when one of the following occurs:

   a. EXPAND is pressed when amber.

   b. Selection of any radar mode other than image.

2. Deactivation results:

   a. EXPAND changes from amber to green.

   b. Four image format is displayed.

   c. The SEL QUADRANT cue is removed.

6.2.21.3 REPOSN CURSOR Option

COTAC
TACCO
SENSO

REPOSN CURSOR

RDR B
RADAR B

PURPOSE:

Allows the operator the designate the zero Doppler point.

PREREQUISITES:

1. RDR B (COTAC) or RADAR B (TACCO) matrix is active.
2. DSPL IMAGE option is active.
3. CONTIN SCAN option is active.
4. A/B option is active.

PROCEDURE:

1. Press REPOSN CURSOR (lights amber).

   a. The following cue appears:

      REPOSITION CURSOR
      \+ SEARCH OUT
      – SEARCH IN

2. Respond to the REPOSITION CURSOR cue.

   a. Press + or – to select outward or inward as desired.

3. Press ENTER.

   a. Press ENTER to stop outward or inward movement of the image range.

DEACTIVATION:

1. REPOSN CURSOR is deactivated when one of the following occurs:

   a. REPOSN CURSOR is pressed when amber.

   b. Activation of another function requiring the use of the cueing area.

   c. Deactivation of the CONTIN SCAN option.

   d. Deactivation of the A/B SCAN option.

   e. Deactivation of the DSPL IMAGE option.

2. Deactivation results:

   a. REPOSN CURSOR changes from amber to green.

   b. All related cues are removed from the display.

6.2.21.4 A-SCAN SHIFT Option

COTAC
TACCO
SENSO

A SCAN SHIFT

RDR B
RADAR B

PURPOSE:

Provides the controlling operator with the capability of shifting the target data within the A-scan window, left or right in increments of one-eighth full scale.

PREREQUISITES:

1. RDR B (COTAC) or RADAR B (TACCO) matrix is active.
2. DSPL image option is active.

3. CONTIN scan option is active.

4. A/B-scan option is active.

PROCEDURE:

1. Press A-SCAN SHIFT (lights amber).

   a. The following cue appears:

   SEL A-SCAN SHIFT
   + RIGHT
   – LEFT

2. Respond to SEL A-SCAN SHIFT cue.

   a. Press + or – to select desired shift.

3. Press ENTER.

   a. If (+) was selected, the A-scan display shifts to the right in increments of one-eighth full scale.

   b. If (–) was selected, the A-scan display shifts to the left in increments of one-eighth full scale.

DEACTIVATION:

1. A-SCAN SHIFT is pressed when amber.

   a. A-SCAN SHIFT is pressed when amber.

   b. Activation of another function requiring the use of the cueing area.

   c. DSPL IMAGE is deactivated by the controlling operator.

2. Deactivation results:

   a. A-SCAN SHIFT changes from amber to green.

   b. SEL A-SCAN SHIFT cue is removed from the display.

6.2.21.5 ANT CONT Option

COTAC
TACCO
SENSO

RDR B
RADAR B

PURPOSE:

Provides the controlling operator with control over the following antenna parameters:

1. Tilt
2. Tilt initialization
3. Automatic tilt
4. Antenna lock stabilization
5. Sector scan.

PREREQUISITES:

1. RDR B (COTAC) or RADAR B (TACCO) matrix is active.
2. DSPL PPI function is active.

PROCEDURE:

1. Press ANT CONT (lights amber).

   a. ANTENNA PARAMETERS tableau is displayed.

   b. The following cue appears:

   SEL ANT CONTROL
   1 UP 1 6 AUTO TILT
   2 UP 5 7 LOCK STAB
   3 DN 1 8 SECTOR
   4 DN 5
   5 INIT

Note

Options 1, 2, 3, 4, and 5 are not available with automatic tilt ON.

2. Respond to the SEL ANT CONTROL cue.

   a. If decision 1 or 2 is selected, proceed to step 3.

   b. If decision 3 or 4 is selected, proceed to step 4.

c. If decision 5 is selected, proceed to step 5.

d. If decision 6 is selected, proceed to step 6.

e. If decision 7 is selected, proceed to step 7.

f. If decision 8 is selected, proceed to step 8.

3. Press ENTER.

a. Antenna tilt is increased 1° or 5°, as selected.

4. Press ENTER.

a. Antenna tilt is decreased 1° or 5°, as selected.

5. Press ENTER.

a. Antenna tilt is set to the initialized value based on aircraft altitude and PPI range scale.

6. Press ENTER.

a. If the current status of automatic tilt is OFF, automatic antenna tilt is performed.

b. If the current status of automatic tilt is ON, automatic antenna tilt is discontinued.

7. Press ENTER.

a. If the antenna is currently stabilized, the antenna is locked to the airframe.

b. If the antenna is currently locked, the antenna is stabilized.

8. Press ENTER.

a. The following cue appears:

SEL SECTOR

0	0	5	50
1	10	6	60
2	20	7	90
3	30	8	120
4	40	9	FULL

b. If decision 0 is selected, proceed to step 9.

c. If 1 through 8 is selected, proceed to step 10.

d. If decision 9 is selected, proceed to step 11.

9. Press ENTER.

a. The antenna is set to the searchlight mode.

10. Press ENTER.

a. The antenna is set to the sector selected.

11. Press ENTER.

a. The antenna is set to the full scan mode.

12. The following cue appears:

SEL SOURCE
1 TDS
2 REL A/C
3 REL NORTH
OPTNL

13. Respond to the SEL SOURCE cue.

a. If decision 1 TDS is selected, proceed to step 14.

b. If decision 2 REL A/C is selected, proceed to step 15.

c. If decision 3 REL NORTH is selected, proceed to step 16.

14. Press ENTER.

a. The TDS is used as the antenna sector reference angle source.

15. Press ENTER.

a. Antenna azimuth angle is maintained constant relative to aircraft heading. Proceed to step 17.

16. Press ENTER.

a. Antenna azimuth angle is maintained constant relative to north.

17. Press ENTER.

a. The following cue appears:

ENT BEARING — DEG
_ _ _

18. Respond to the ENT BEARING DEG cue.

    a. Press numerics on the keyset to select the desired bearing.

DEACTIVATION:

1. ANT CONT is deactivated when one of the following occurs:

    a. ANT CONT is pressed when amber.

    b. Activation of another function requiring the use of the cueing area.

    c. Deactivation of DSPL PPI function by the controlling operator.

2. Deactivation result:

    a. ANT CONT changes from amber to green.

6.2.21.6 IFF ONLY Option

COTAC
TACCO
SENSO

RDR B
RADAR B

PURPOSE:

Provides the controlling operator with the capability of inhibiting radar RF radiation, while permitting a ground stabilized PPI display format and the display of land-based shipboard and airborne IFF/SIF transponders interrogated by the APX-76 interrogator set.

PREREQUISITES:

1. RDR B (COTAC) or RADAR B (TACCO) matrix is active.

2. DSPL PPI option is active.

Note

With DSPL PPI, CONTIN SCAN, and IFF ONLY active, the radar will not radiate, but subsequent operator activation of the correct code challenge switch on the APX-76 will allow IFF radiation and display.

PROCEDURE:

1. Press IFF ONLY (lights amber).

    a. MIN SCAN option becomes unavailable.

    b. If CONTIN SCAN is active, RF radiation is inhibited. Radar antenna rotates at 6 rpm.

    c. MPD displays the IFF data.

DEACTIVATION:

1. IFF ONLY is deactivated when one of the following occurs:

    a. IFF ONLY is pressed when amber.

    b. Deactivation of the DSPL PPI option by the controlling operator.

2. Deactivation results:

    a. IFF ONLY changes from amber to green.

    b. CONTIN SCAN is deactivated.

    c. MIN SCAN option becomes available.

6.2.21.7 ISAR STAE Option

COTAC
TACCO
SENSO

RDR B
RADAR B

PURPOSE:

Provides the controlling operator with the capability of selecting the low PRF when ISAR image indicates problems with the second or multiple time around echoes.

PREREQUISITES:

1. RDR B (COTAC) or RADAR B (TACCO) matrix is active.

2. DISPL IMAGE option is active.

3. CONTIN SCAN option is active.

PROCEDURE:

1. Press ISAR STAE (lights amber).

   a. The RIU is commanded to the image mode low PRF (500 pps).

DEACTIVATION:

1. ISAR STAE is deactivated when one of the following occurs:

   a. ISAR STAE is pressed when amber.

   b. Deactivation of the DSPL IMAGE option.

   c. Deactivation of the CONTIN SCAN option.

2. Deactivation results:

   a. ISAR STAE changes from amber to green.

   b. The RIU is commanded to the image mode high PRF (2,000 pps).

6.2.21.8 MIDCOURSE UPDATE Option

COTAC
TACCO
SENSO

MIDCRS UPDATE

RDR A
RADAR A

PURPOSE:

Provides the controlling operator the selection of fix data to send over the NIU for SLAM-ER targeting purposes. The latitude, longitude, time and elevation of the surface fix will be sent.

PREREQUISITES:

1. RDR B (COTAC) or RADAR B (TACCO) matrix is active.

2. TAC PLOT or radar PPI is displayed.

3. A LINK-11 remote track or local Radar track or fix or TACCO Designated track or fix is hooked.

PROCEDURE:

1. Press MIDCRS UPDATE (lights amber):

   If an ineligible item is hooked, the REPOSITION HOOK alert is displayed.

2. The advisory alert:

   ZZZZ CHECK FIX TIME

   and following cue are displayed (at the same time):

   ENT TGT ELEV-FT
   _ _ _ _ _
   0
   OPTNL

3. The operator enters the desired target elevation (in feet) or selects SKIP CUE.

Note

The valid range of values in feet is –300 feet to +26866 feet.

4. If SKIP CUE is selected or if no elevation is entered and the ENTER keyset selection is pressed, the default elevation value of zero will be sent.

5. When the fix data (which includes local fix number or Link remote track number, time of entry, position and entered elevation) has been sent over the NIU, the following advisory will be displayed (at all stations):

   ZZZZ MIDCRS UPDATE

Note

If the NIU is determined to be unavailable, the following alert is displayed:

NAV INTF DOWN

No data is sent. The operator should check the NIU interface status and reinitialize before attempting to use the MIDCRS UPDATE option.

6. The same fix information is extracted.

WARNING

To ensure that the correct seconds after the hour are transmitted, a MARK TIME, using GPS TIME must be performed before using this function.

Note

If a midcourse update is requested for a fix, then the parameters associated with that fix will be transmitted over the NIU to the SLAM-ER pod. However, if a midcourse update is requested for local or remote track, then the parameters associated with the last fix update of that track will be transmitted over the NIU to the SLAM-ER pod. The parameters associated with the actual track will not be sent.

DEACTIVATION:

1. MIDCRS UPDATE is deactivated if pressed when amber, if TERM CUE is selected or when the cueing sequence is completed.

2. Deactivation results:

   MIDCRS UPDATE changes from amber to green.

6.3 INTERROGATOR SET

The interrogator set, Figure 6-37, provides an IFF/SIF capability to interrogate land-based, shipboard, and airborne IFF/SIF transponders. The encoded replies are processed and then displayed on the COTAC, TACCO, or SENSO radar display on the MPD. In addition to identifying friendly transponder equipped units, the interrogator is capable of identifying a specific friendly unit by the use of selectable codes. Five operating modes are provided: Modes 1, 2, 3/A, 4A, and 4B. Modes 1, 2, and 3/A provide for military and/or civil aircraft traffic control. Modes 4A and 4B provide for secure military SIF and require a computer to be included in the system.

6.3.1 Interrogator Equipment. The interrogator set is operated off-line and is composed of the components shown in Figure 6-38.

The interrogator set interfaces with components shown in Figure 6-39.

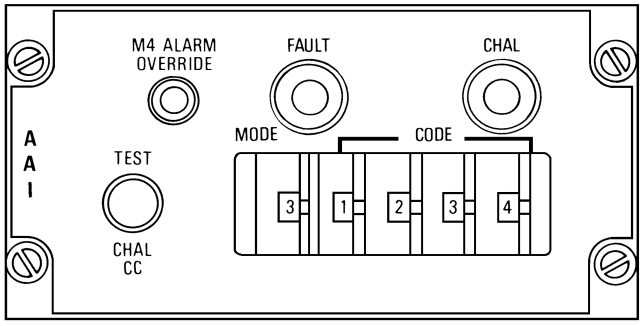

CONTROL	POSITION	INDICATION	FUNCTION
M4 ALARM OVERRIDE	Forward	Visual	Removes the M (mode) 4 audio alarm tone from COTAC headset by disabling the Mode 4 computer. Modes 1, 2, and 3/A are not affected.
	Aft	Visual	Enables normal operation and notifies the COTAC of Mode 4 computer faults.
FAULT		OFF	No faults detected.
		Amber	The CHAL CC switch is actuated during the first 90-second warmup period or a fault is detected during an interrogation.
			Temporary faults are cleared automatically and the light goes out. A continuous amber light indicates the system is not functioning.

Figure 6-37. Air-to-Air Interrogator Control Panel and Indicators (Sheet 1 of 2)

CONTROL	POSITION	INDICATION	FUNCTION
CHAL		OFF	Challenge pulses are not being transmitted.
		Green	Challenge pulses are being transmitted and the CHAL CC/TEST switch is in either position.
CHAL CC/TEST	Center	Visual	Off. Neither a challenge nor a test is provided.
	TEST	Visual	Provides a test of the interrogator and transponder.
			A CHAL CC response is displayed at a range of 4 miles when identical modes and codes are selected on the interrogator and transponder.
Note In addition to own aircraft transponder reply, returns from all other transponders squawking on the selected mode will also be displayed, regardless of their code.			
	CHAL CC (Challenge Correct Code)	Visual	Provides continuous challenges in the selected mode.
			Responses in the selected code are available for display.
MODE	1, 2, 3/A, 4A, or 4B	Visual in window	Selected the challenge mode by thumbwheel rotation.
	STANDBY (White square on thumbwheel)	Visual in window	Places APX-76 in standby and removes 28 Vdc on signal from radar synchronizer/exciter.
CODE	Setting compatible with mode (see Note)	Visual in window	Selects the code to be matched with the received transponder response by rotating the thumbwheels. Codes 0 through 7 can be selected on each switch.
			Code 73 is the maximum setting used with Mode 1 providing 32 combinations. Code 7777 is the maximum setting used with Modes 2 and 3/A, providing 4096 combinations. The code thumbwheels are not used with Modes 4A and 4B.

Figure 6-37. Air-to-Air Interrogator Control Panel and Indicators (Sheet 2)

TYPE DESIGNATOR	NOMENCLATURE	LOCATION
RT-868A/APX-76A	Receiver Transmitter	Left external bay
SN-416A/APX-76A	Synchronizer	Left external bay
SA-1568/APX-76A	Switch Amplifier	Left external bay
KIR-1A/TSEC	Mode 4 Computer	Left external bay
AS-2719/AP	Antenna	Forward radome

Figure 6-38. Interrogator Components

TYPE DESIGNATOR	NOMENCLATURE	LOCATION
AN/ASA-82	Tactical-Acoustic Indicator Display Group	Crew stations and forward of entrance hatch
AN/APS-l37	Radar System	Nose section

Figure 6-39. Interrogator Interfaces

6.3.2 IFF Controls and Indicators. The IFF operates only off-line and interfaces with the radar system and the tactical display system. IFF mode and code assignments are normally established during preflight procedures. The AAI (air-to-air interrogator) panel, located on the flight station center console, is shown in FO-1.

6.3.3 Interrogator Displays. An identification challenge is initiated by transmitting an interrogation. The type of interrogation is determined by the mode selection on the interrogator control panel. All transponders of those similarly equipped units within range, respond by transmitting coded replies which are received and compared to the interrogation code. When a match (code and mode) occurs, an identifying bracket consisting of one video line on each side of the radar video is displayed on the radar plot. Coded replies that do not match are ignored. Figure 6-40 illustrates the interrogation process and the resulting display.

Thus IFF replies can be displayed:

1. Off-line with the OLCU switch in RAD.
2. On-line with the radar radiating in the periscope, navigation/weather, or surface search modes displayed in the PPI format.
3. On-line with the radar not radiating by selecting the IFF ONLY option.

Challenge CC interrogation of a unit squawking MODE 1 IDENT will provide a double bracket if the unit is interrogated correctly with its Mode 1 code. Idents will not be displayed using challenge CC mode 2 or 3/A codes (Figure 6-41). Mode 1 and 2 emergency squawks will display the emergency brackets (4 sets) only if those codes happen to be set to all zeros. The emergency brackets will not be displayed for Mode 3/A emergency squawks. All other emergency squawk conditions will provide a single bracket if the unit is interrogated correctly with its Mode 1 or 2 code or Mode 3/A code 7700 (Figure 6-42).

6.4 ELECTRONIC SUPPORT MEASURES SYSTEM

Refer to NAVAIR 01-S3AAB-1A NATOPS Supplemental Flight Manual for additional information related to ESM.

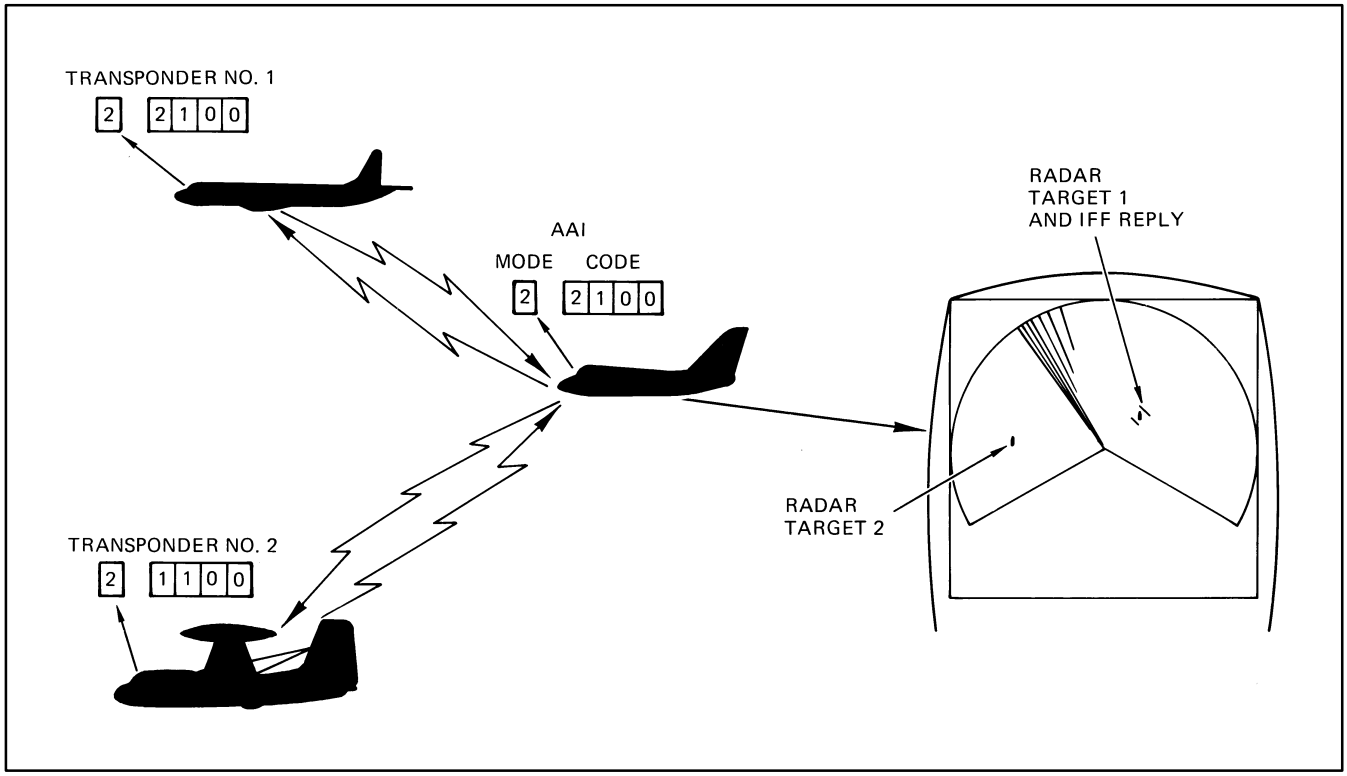

Figure 6-40. IFF/SIF Procedure and Display

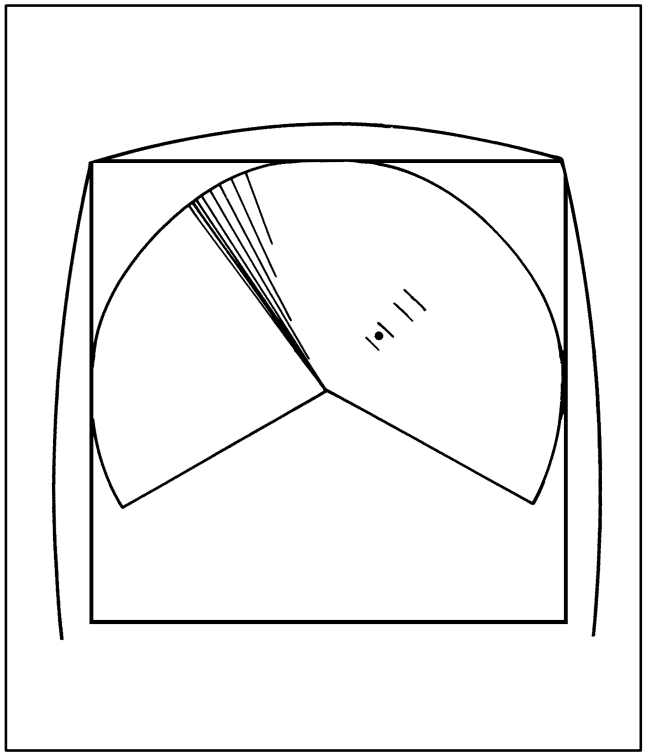

Figure 6-41. IFF Mode 1 Display

CONDITION	MODE	CORRECT DISPLAY
Incorrect Mode and/or Incorrect Code	1, 2, 3/A	(No returns)
Correct Mode Correct Code	1, 2, 3/A	) .)
Correct Mode Correct Code	1(IDENT)	) .)))
Correct Mode Correct Code	2, 3/A(IDENT)	) .)
Correct Mode Correct Code	1, 2(EMERG)*	) .)
Correct Mode 7700 Code	3/A(EMERG)	) .)
* If code happens to be all zeros, there will be four sets of pulses (eight total).		

Figure 6-42. IFF Mode Code Displays for Challenge CC

6.4.1 AN/ALR-76 ESM. The AN/ALR-76 ESM system is a passive acquisition and direction finding system designed to detect and analyze electromagnetic signals in the designated frequency region. The ESM Operational Mission Program (OMP) reports emitter signature and bearing information to the ESM subprogram in the GPDC for display. The OMP predictably tracks emitters and reports activity. System hardware components include the following:

1. Eight (8) AS-3643/ALR-76 antennas
2. Two (2) R-2257/ALR-76 receivers
3. One (1) CM-499/ALR-76 signal comparator.

The antennas are divided into two separate arrays of four each and are located in two wing tip pods.

Their purpose is to sense emitter signals present within their respective beams.

The receivers, one located in each wing tip pod, detect the sensed signals from the antenna array, perform the necessary frequency conversion, send information to the signal comparator, and respond to signal comparator commands.

The signal comparator (with embedded OMP) receives the signals from the receivers and performs the following:

1. Pulse sorting
2. Pulse tracking
3. Emitter identification
4. Emitter location determination
5. Emitter correlation
6. Emitter reporting
7. Subsystem control
    a. Antenna selection
    b. Receiver tuning control
    c. Pulse load management.
8. All subsystem analog and digital processing
9. Warning tone generation
10. All DPS interface tasks.

A block diagram of the ESM system is shown in Figure 6-43.

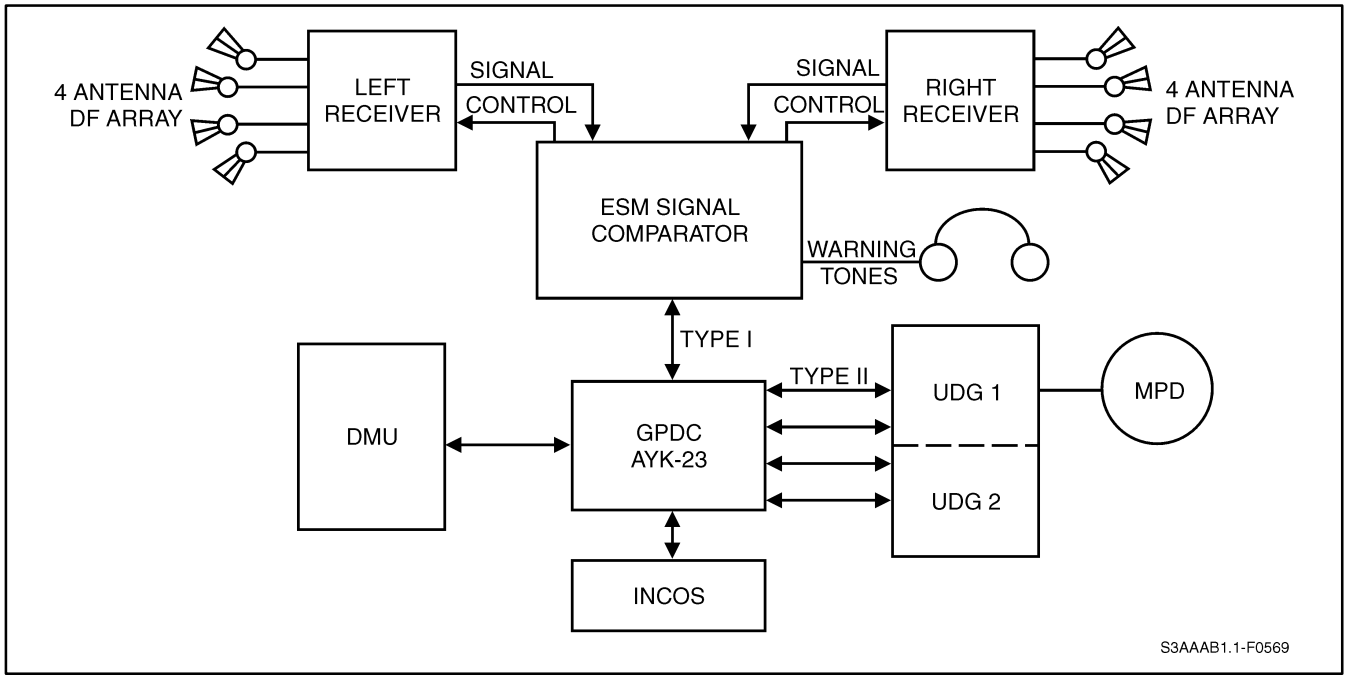

Figure 6-43. ESM System Block Diagram

PART VI

Acoustic Sensors

Chapter 7 — Acoustic Data Processing System (ADPS)

CHAPTER 7

Acoustic Data Processing System (ADPS)

7.1 ACOUSTIC SYSTEM

The ASW mission has been removed from the S-3B. Therefore, most ADPS equipment and software has also been removed from the aircraft. The remaining ASW-related switches, equipment, or indicators fall into one of the following categories:

1. Switch/equipment/indicator is no longer operational.

2. Switch/equipment/indicator also serves a non-ASW-related function.

7.2 SRX POWER CONTROL AND SAU TEMPERATURE INDICATOR

The SRX power switch and SAU temperature indicator share a panel with the ESM power switch, as shown in Figure 7-1. The SRX power switch and SAU temperature indicator are no longer operational.

7.3 SONOBUOY MONITOR PANEL

The Sonobuoy Monitor Panel (SMP) is shown in Figure 7-2. The only settings/controls at the Sonobuoy Monitor Panel that will be used are ICS, LEFT VOL,

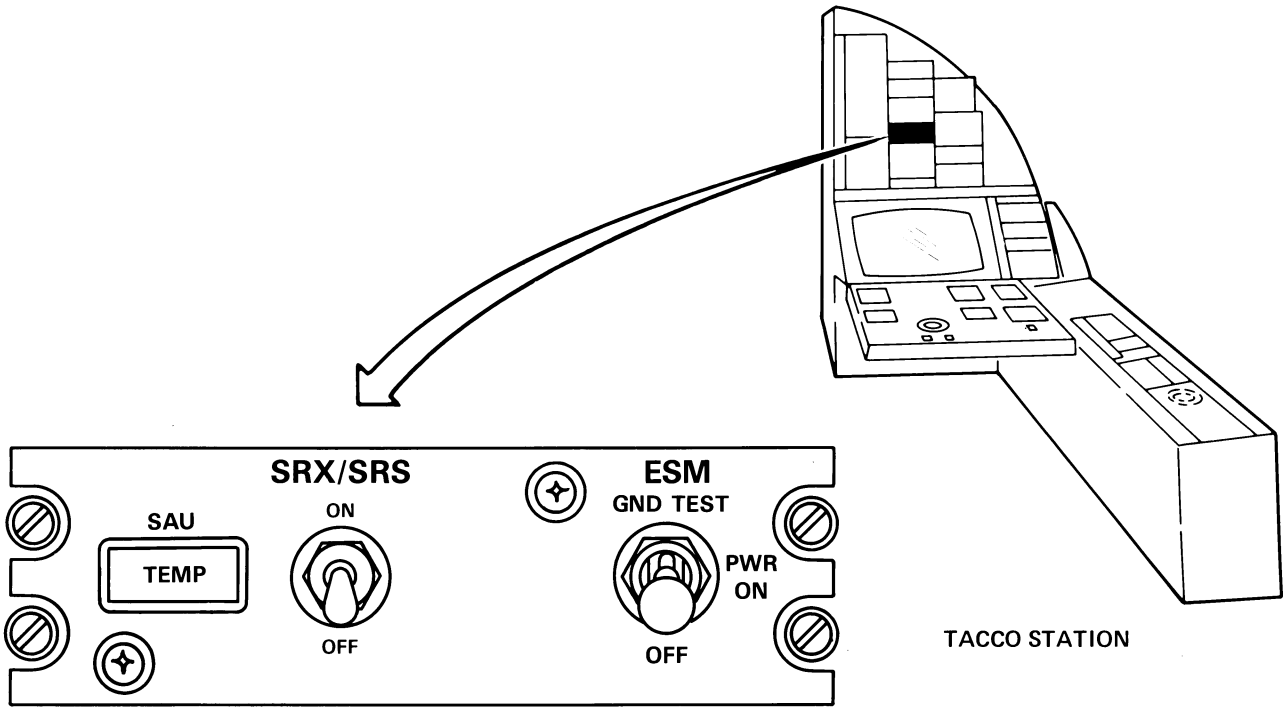

Note

The SAU TEMP indicator and SRX/SRS switch are no longer operational.

Figure 7-1. SRX Power ON/OFF Switch and Location

and RIGHT VOL. All other selections (AUX, A, B, A+B, SONO, SONO+ICS) are ASW controls that will either disable ICS capability or have no effect on internal communications. Figure 7-3 describes the SMP functions.

7.4 SAU POWER ON/OFF SWITCH

The SAU power ON/OFF switch is located above the TACCO MPD as shown in Figure 7-4. The SAU and PDP/DRUM switches are no longer operational.

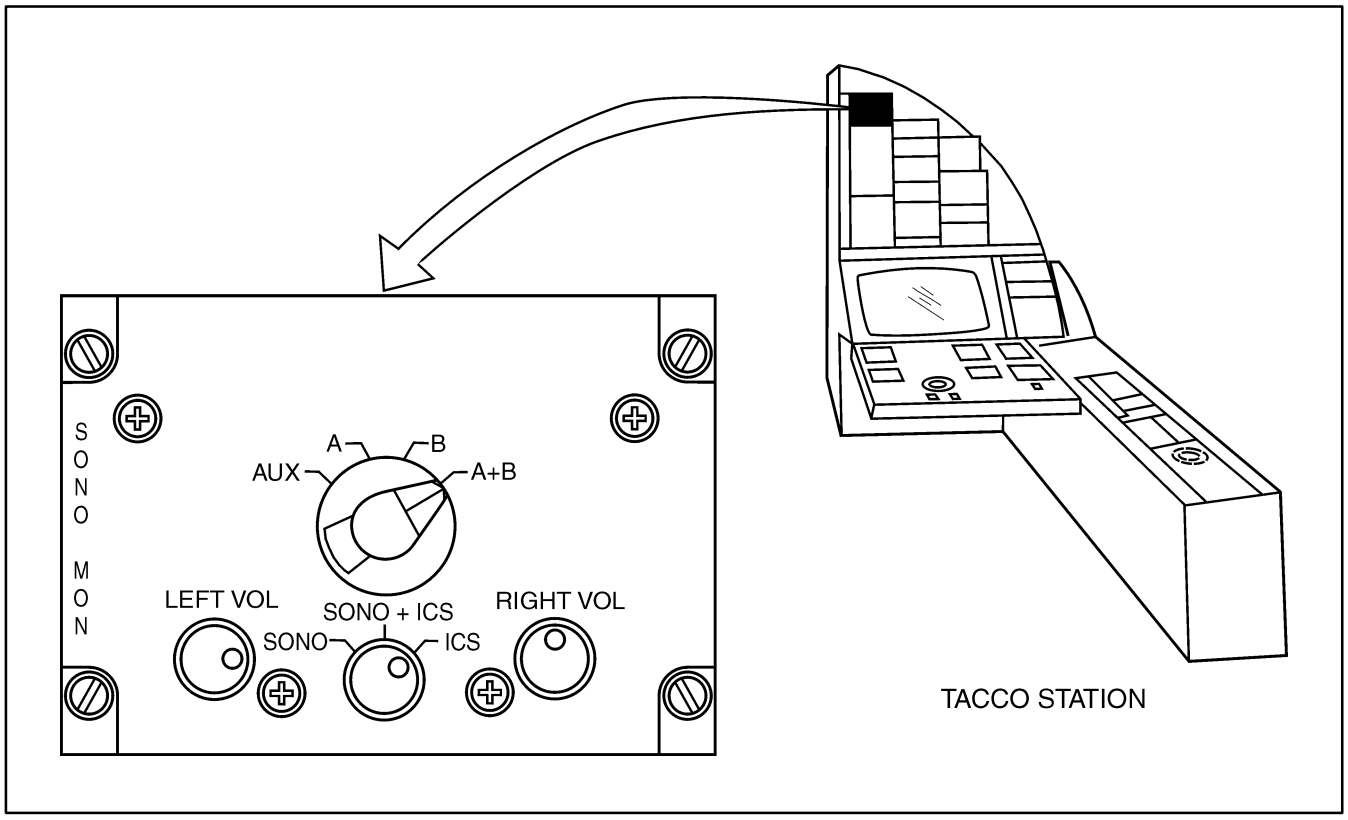

Figure 7-2. Sonobuoy Monitor Panel and Location

CONTROL NAME	CONTROL POSITION	CONTROL POSITION FUNCTION
SONO	SONO	Disables ICS.
SONO+ICS	SONO+ICS	Disables ICS.
ICS	ICS	Routes ICS and operator selected radio receiver audio to headset.
	LEFT/RIGHT	Controls the volume to operator's left or right earphone of the headset.
AUX	AUX	Not operational.
A	A	Not operational.
B	B	Not operational.
A+B	A+B	Not operational.

Figure 7-3. Sonobuoy Monitor Panel Controls and Functions

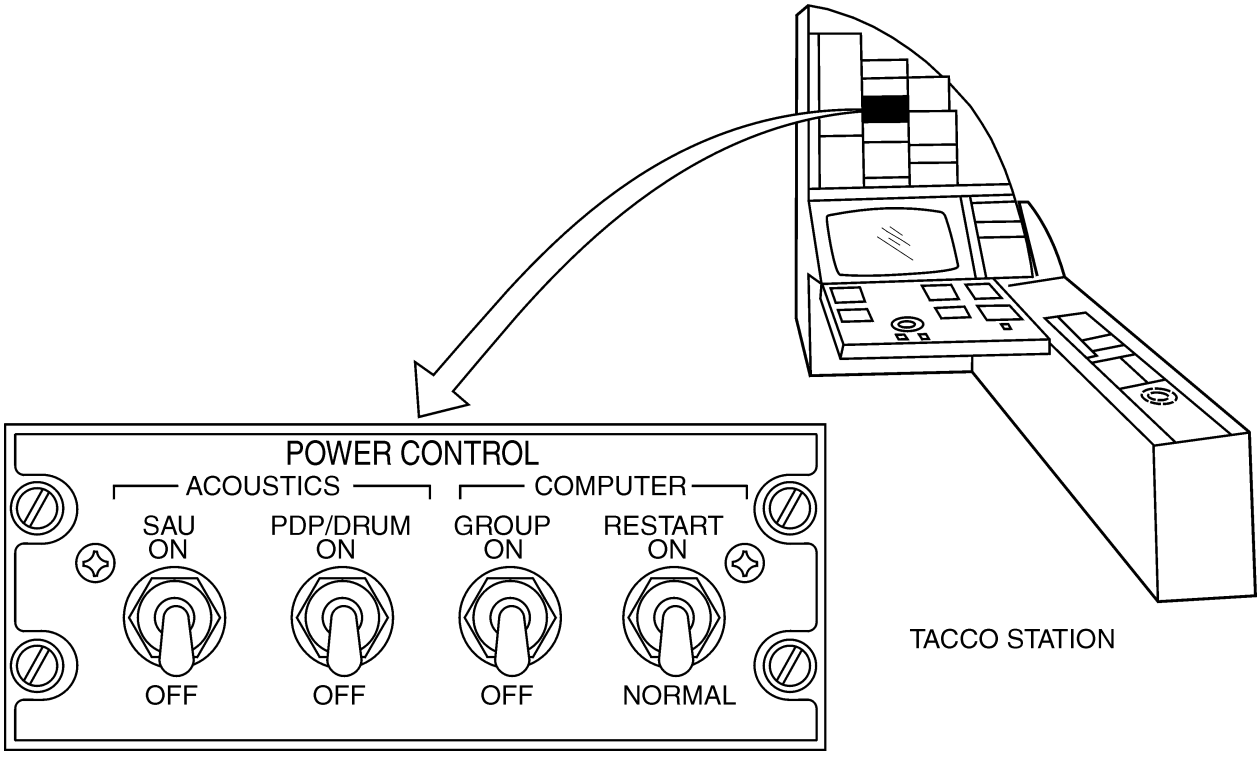

Note

The SAU and PDP/DRUM switches are no longer operational.

Figure 7-4. SAU Power ON/OFF Switch Location

PART VII

Cues

Chapter 8 — Cues

CHAPTER 8

Cues

8.1 INTRODUCTION

Cues are GPDC messages displayed on the MPDs that give directions to the COTAC, TACCO, and SENSO operators when processing a particular function. Cues are not displayed at the pilot station.

There are four types of cues:

1. Data entry
2. Decision
3. Function activation
4. Loader.

Basic cues and usage are described in Chapter 1. Each cue and the purpose of that cue, with applicable selection ranges, are described in the following pages and in S-3B NATOPS Supplemental Flight Manual (NAVAIR 01-S3AAB-1A).

Data entry and decision cues are classified as optional or mandatory. Function activation and loader cues are always mandatory.

8.2 DATA ENTRY CUES

Data entry cues are displayed when a numeric input is required. Mandatory data entry cues instruct the operator to type in the number appropriate for the function being processed or to use the suggested entry displayed below the cue entry verification line. When there is no suggested entry, the operator types in the appropriate numbers which then appear on the cue verification line. The operator visually checks the entry, then presses ENTER. This enters the data into the system and removes the cue from the display.

Optional data entry cues have OPTNL displayed in the lower right-hand corner of the display cue area. The operator can type in appropriate numbers which then appear from right to left replacing the dashes in the cue verification area. The operator visually checks the entry and presses ENTER. This enters the data into the system and removes the cue from the display. Figure 8-1 lists the data entry cues and purposes.

8.3 DECISION CUES

Decision cues (Figure 8-2) are displayed when the program requires the operator to select one of several specific responses. The operator types in the number representing the decision. The decision is checked by observing the entry in the cue verification area located in the upper left corner of the display cue area. The ENTER switch is then pressed to enter the decision into the program and remove the cue from the display. The operator can choose to skip the cue if it is an optional cue.

When SKIP CUE is pressed, the program continues processing the function using preprogrammed data.

8.4 FUNCTION ACTIVATION CUES

Function activation cues are displayed when an additional specific function is required to complete processing of an active function (Figure 8-3).

Function activation cues instruct the operator to enter data into the program, or to activate, designate, or position symbology on the display. When data is entered in the program, the ENTER switch is pressed to complete the function and remove the cue from the display. When function activation cues instruct the operator to hook symbology or points of interest on the display, the HOOK VERIFY and ENTER switches are pressed to complete the function and remove the cue from the display.

8.5 LOADER CUES

Loader cues (Figure 8-4) are displayed during program loading and initialization.

Loader cues allow the operator to instruct the program to select a particular program and also to enter information unique to a given mission.

DATA ENTRY CUE	PURPOSE
ASSIGN TN ____ XXXX OPTNL	Assign a link track number. Entry range is 1 through 7776 octal.
ENT BEARING—DEG _ _ _ OPTNL	Enter a bearing in degrees. Entry range is 000 through 359°. Cue is optional in SONB PATT function. SKIP CUE causes an undesignated expendable FTP to be displayed.
ENT BEARING—DEG _ _ _	To allow the operator to enter an azimuth reference relative to north or the aircraft.
ENT BEARING—DEG XXX	Enter wind bearing in degrees for target aids function. Entry range is 000 through 359°.
ENT BRG RATE—DPM XYYY	Enter bearing rate in degrees per minute. X = + (clockwise) or – (counterclockwise). YYY = 000 to 999° per minute.
ENT CLASSIFICATION	To classify the frozen ISAR image. Entry range is lines 5 to 30 of CLASS AIDS Tableau.
ENT CNTCT NUM XXX	Enter a contact number, 1 through 377 (octal). XXX = The suggested entry, if applicable, is the next sequential unused contact number.
ENT COURSE—DEG _ _ _	Enter an estimated target course in degrees. Entry range is 000 through 359°.
ENT DI CODE ____ XXXX OPTNL	Assign or remove a DI (Link Discrete Identifier) Code. Entry range is 0000 through 7777 octal. Suggested entry is current value.
ENT DTOT—STA X _ _ _ _ _ _	X = 5 or 6. Entry range is 0000 00 to 23 59 59.
ENT END BRG _ _ _ OPTNL	Allows the operator to enter a bearing stop point to inhibit emitter detection.

Figure 8-1. Data Entry Cues and Purposes (Sheet 1 of 6)

DATA ENTRY CUE	PURPOSE
ENT ESM LBRY NUM ____ OPTNL	Select ESM Library number within range of valid entries.
ENT EXPAN RATE—KTS _ _	Enter a circle expansion rate in knots. Entry range is 0 through 99.
ENT INTERVAL—MIN X	Enter the time interval (in minutes) between aircraft track history symbols. If the aircraft track history function is active, the present interval will be displayed as suggested entry, X. If the function is not active, there will be no suggestion. Entry range is 1 through 9.
ENT LATITUDE ___ __.___ X XX XX.XXX	Enter a latitude. Entry range S 90°00′.000′ through N 90° 00′.000′. X XX XX.XXX = The suggested entry, if applicable. Enter direction, followed by degrees, minutes, and optionally decimal minutes.
ENT LINE NUM XX OPTNL	Enter a tableau line number. The suggested entry is the next modifiable line of the tableau on the display. Entry range is 1 through 30. Cue is optional in SELECT LINE function only. SKIP CUE displays next modifiable line number as suggested entry.
ENT LINK TN XXXX OPTNL	Assign a link track number for assemble report. Entry range is 1 through 7776 octal. XXXX = Computer suggested entry. Cue is optional in ASSEM REPORT function. SKIP CUE results in automatic track number assignment if net is active.
ENT LOCAL TN XXXX OPTNL	Enter a local track number of a fix. Entry range is 200 through 7776 octal. Suggested entry is the next sequential unused track number. Cue is optional in MOD CAT-ID function.
ENT LONGITUDE ____ __.___ X XXX XX.XXX	Enter a longitude. Entry range W 180°00′.000′ through E 180° 00′.000′. X XXX XX.XXX = The suggested entry, if applicable. Enter direction, followed by degrees, minutes, and optionally decimal minutes.
ENT LOWER TN XXXX	Enter the lower limit for the track number block. The lower track number must be less than the upper track number. Entry range is 200 through 7776 (octal).
ENT MODE 1 _ _ 00 OPTNL	Enter or request a mission purpose code to be associated with a previously hooked track. Mission purpose codes are 100 through 7300, by 100s, and therefore have two present zeros. SKIP CUE allows response to ENT MODE 2 only.

Figure 8-1. Data Entry Cues and Purposes (Sheet 2)

DATA ENTRY CUE	PURPOSE
ENT MODE 2 ____ OPTNL	Enter or request an IFF/SIF identification code to be associated with a previously hooked track. Entry range is 0 through 7777 octal. SKIP CUE allows response to ENT MODE 1 cue only.
ENT NUM __ XX	Enter number to be assigned to Geographic point of interest. Entry range is 1 through 99.
ENT NUM MASTS _	To designate the number of masts on the frozen ISAR image. Entry range is 1 through 4.
ENT NUM SUPERSTRCT _	To designate the number of superstructures on the frozen ISAR image. Entry range is 1 through 4.
ENT OAC ADDRESS XX	Enter or change own aircraft address. Entry range is 1 through 76 octal. XX = Computer suggested entry if OAC address has previously been assigned.
ENT OFFSET—YDS ____	Enter the distance that the torpedo splash point will lead the target.
ENT PROBABILITY 05	Enter the probability level of a probability contour. Entry range is 1 through 9. 05 is always the suggested entry.
ENT PU ADDRESS _ _	Enter the address of a participating unit of the Link 11 net. Entry range is 1 through 76 (octal).
ENT PU OR RU ___ DEFAULT ALL OPTNL	Enter a Link PU or a RU number. Entry range for PU is 1 through 76 (octal). Entry range for RU is 100 through 176 (octal). Optional selects all PUs and RUs.
ENT QTY _	Enter the number of sonobuoys desired in a sonobuoy pattern. Entry range is 2 through 6.
ENT QTY XX AVAIL _ _	Enter a quantity of kill stores. XX = 1 through 10 (quantity available).

Figure 8-1. Data Entry Cues and Purposes (Sheet 3)

DATA ENTRY CUE	PURPOSE
ENT RADIUS—NM ____	Enter a circle radius in nautical miles. Entry range is 0 through 9999.
ENT RADIUS—YDS ____	Enter a circle radius in yards. Entry range is 0 through 65535.
ENT RANGE—NM __.-	Enter a circle radius in nautical miles. Entry range is 0 through 99.9.
ENT RF XX	Enter a sonobuoy RF channel number. Entry range is 1 through 99. XX is the suggested entry, if applicable.
ENT RNG TO NCS—NM	Enter a range value into the system when NET SYNC mode has been selected. Enter range to net control station is 0 through 775.
ENT SECRET CODE ____	Enter Code for Secret Lock. Range is 0 through 9999.
ENT SONB TYPE __	Enter a sonobuoy type. Entries are 41, 53, 62, or 77.
ENT SPACING—YDS __	Enter the spacing in yards for multiple drops of bombs. Entry range is 25 through 70.
ENT SPACING—YDS ____	Enter the spacing in yards for multiple drop of mines, practice stores, and cluster bombs. Entry range is 50 through 9999.
ENT SPEED—KTS XXXX	Enter wind speed in knots for target aids function. Entry range is 000 through 999 knots.
ENT STA ELEV—FT ____ OPTNL	Enter the elevation in feet of a tacan station. Entry range is 0 through 9999. SKIP CUE (OPTNL) enters station elevation of zero feet.
ENT STA M VAR—DEG ____ OPTNL	Enter the magnetic variation of a tacan station. Entry range is –180 through +180°. SKIP CUE (OPTNL) enters aircraft magnetic variation (NAV PARAMETERS Tableau).

Figure 8-1. Data Entry Cues and Purposes (Sheet 4)

DATA ENTRY CUE	PURPOSE
ENT START BRG --- OPTNL	Allows the operator to enter a bearing start point to inhibit emitter detection.
ENT STORE TYPE XX	Enter a store type. XX — The suggested entry will be 25, 41, 53, 58, 62, 77, or 84, and is the search store currently listed in the line of the SRCH STRS INV Tableau that is to be modified.
ENT TGT ELEV-FT	Enter the elevation in feet between –300 and +26866 feet. SKIP CUE (OPTNL) enters an elevation of zero feet. **Note** Target elevation entry determines formatting of the Mid-course Update command message. Entry of 0 for elevations sends a message formatted for TOO ASUW missions, while entering a non-zero value formats the command for LAND missions (PP and TOO LAND missions-not available in SLAM-ER with SSV prior to 1.9). A command in the incorrect format will result in missile rejection of the Mid-course Update.
ENT TGT ELEV-FT ----- 0 OPTNL	Enter target elevation for Midcourse Update function. Range is –300 to 26866. Default is 0.
ENT TIME ACQUIRED ---- XXXX OPTNL	Enter estimated time acquired as part of ASSIGN TN.
ENT TIME LEFT—HRS -.- OPTNL	Enter the remaining life (in hours and tenths of hours) of an inserted sonobuoy. SKIP CUE for this optional cue will cause the remaining life to be set to the maximum for the sonobuoy type entered. Entry range is 0 through 9.9.
ENT TIME LOST ---- XXXX OPTNL	Enter estimated time lost as part of ASSIGN TN.
ENT TIME—MIN ---	Enter the time interval for the desired probability contour. Entry range is 0 through 999.

Figure 8-1. Data Entry Cues and Purposes (Sheet 5)

DATA ENTRY CUE	PURPOSE
ENT TIME—ZULU XXXX	Enter a time in hours and minutes. Entry range is 0000 through 2359. XXXX is the suggested entry, if applicable.
ENT TYPE LEVEL – 0 OPTNL	Enter sub type level as part of MODIFY CAT/ID. Default is 0.
ENT UNCERTAINTY—YDS XXXXX	Enter uncertainty of designated fixes in yards. Entry range is 200 through 64000. XXXXX = The suggested entry of 500 yards.
ENT UPPER TN XXXX	Enter the upper limit for the track number block. Entry range is 200 through 7776 (octal). The upper track number must be greater than the lower track number.
ENT X—NM ––––	Enter an X grid coordinate in nautical miles. Entry range is –999 through +999.
ENT Y—NM	Enter a Y grid coordinate in nautical miles. Entry range is –999 through +999.
MODIFY LINE XX OPTNL	Modify the previously selected tableau line. XX = Number of the tableau line to be modified. Line 5 contains the modifiable data presently displayed. The modified data will be entered on line 4. Dashes will appear across the top of line 5 if the line is modifiable by alphanumerics. SKIP CUE allows selection of another line number.

Figure 8-1. Data Entry Cues and Purposes (Sheet 6)

DECISION CUE	PURPOSE
ACCEPT SOI 1 YES 2 NO	To enable the operator to select an alternate SOI list for computing the ESM subsystem scanning strategy.
ACCEPT SOI MOD 1 YES 2 NO	To enable operator to accept or reject a SOI list modification.
ALIGN FLIR 1 YES 2 NO OPTNL	Choose whether or not to align the FLIR turret when FLIR DSPL is first activated.
ASSIGN WING STA 1 STA 5 2 STA 6	Designate which wing station selections are to be assigned.
ENTER WIND 1 YES 2 NO	Enables the operator to enter wind for TGT AIDS function.
ERASE IMAGE 1 UPPER LEFT 2 UPPER RIGHT 3 LOWER LEFT 4 LOWER RIGHT 5 ALL QUADRANTS	Gives the operator the option of erasing individual or all quadrants of the image display.
FLIR BIAS XXX EL YYY AZ 1 ACCEPT 2 REJECT	Allows the operator to accept or reject the calculated FLIR bias. XXX = FLIR Turret elevation (0 to –84) degrees. YYY = FLIR Turret azimuth (000 to 359) degrees.

Figure 8-2. Decision Cues and Purposes (Sheet 1 of 26)

DECISION CUE	PURPOSE
GEO CORRECT YYY XX.X AA.A NM Z.Z HRS 1 ACCEPT 2 REJECT	Accept or reject a geographic correction with the exception of TACAN, which has a separate cue. XX.X = Suggested system drift speed in knots, 0.0 through 99.9. NM = Nautical miles. YYY = Suggested system drift direction (from which the system drift is acting) in degrees, positive clockwise from true North, 0 through 359. AA.A NM = Magnitude of the geographic correction in nautical miles, 0.0 through 99.9. Z.Z Time in hours since the last accepted geographic correction, 0 through 9.9. HRS = Hours. In the event that XX.X or AA.A have magnitudes larger than their limits, the cue limit shall be displayed.
LOST CONTACT 1 YES 2 NO	Determine whether or not a subsurface track is a lost contact.
MISSILE SIGHTED 1 YES 2 NO	State whether or not the operator has sighted a missile.
RECYCLE HACLC PWR 1 ACKNOWLEDGE	Informs the operator to cycle the HACLC power switch.
RESERVED SLC 1 ACCEPT 2 RESELECT	Accept a previously selected buoy located in a reserved sonobuoy launch chute or require reselection of another buoy.
RELINQUISH RR 1 YES 2 NO	Choose whether or not to relinquish reporting responsibility. Displayed when option 1 of SEL SUMRY MODE is selected and the summary has failed.
SEL ACK ORDER 1 WINCO 2 CANTCO	Select an acknowledgment (will comply or cannot comply) is an order received via Link 11.
SEL ACTION STA X 1 CHANGE DTOT 2 TERMINATE DTOT	Enables the operator to modify or terminate DTOT function.

Figure 8-2. Decision Cues and Purposes (Sheet 2)

DECISION CUE	PURPOSE
SEL ALERT OPTION 1 ALERT 2 DO NOT ALERT	To designate alerting status or nonalerting status to individual multifix tracks.
SEL ALIGN 1 ALIGN TDS 2 RESET TDS BIAS OPTNL	Enables the operator to align the TDS symbol with the Hook symbol enhancing Radar target tracking control.
SEL ALPHA 1 A-C 6 P-R 2 D-F 7 S-Z 3 G-I 4 J-I 5 M-O	To enable the operator to specify a letter grouping of emitter names whenever he wants to view the ESM; library summary data alphabetically.
SEL ALTITUDE MODE 1 SYSTEM 2 GPDC OPTNL	This cue allows the operator to select the altitude mode, which determines if the altitude used and displayed by the GPDC navigation subprogram is controlled off-line in the NIU, or on-line in the GPDC. Cue is activated by selecting or sequencing to line 18 of NAV PARAMETERS Tableau. “Modify Line 18” is displayed in line 1 of cue.
SEL ALT SOURCE 1 AUTO 2 BARO OPTNL	The GPDC altitude mode selects the altitude submode, which controls the altitude source selection for the altitude that is used and displayed by the GPDC navigation subprogram. Cue is activated by selecting or sequencing to line 19 of NAV PARAMETERS Tableau. “Modify Line 19” is displayed in line 1 of cue.
SEL AM BIG INTSCTN 1 REF 1 AMBIG 2 REF 2 AMBIG OPTNL	Select a classification for ambiguous intersections. SKIP CUE is used when ambiguity cannot be resolved during CMPT INTSCT function.

Figure 8-2. Decision Cues and Purposes (Sheet 3)

DECISION CUE	PURPOSE
SEL ANT CONTROL 1 UP 1 6 AUTO TILT 2 UP 5 7 LOCK STAB 3 DN 1 8 SECTOR 4 DN 5 5 INIT	To alter antenna tilt, select initialization, automatic tilt to the trackball, antenna lock, antenna stabilization, and sector width.
SEL APERTURES 1 1X 2 2X 3 4X OPTNL	To set image aperture integration time.
SEL ARMING 1 NOSE 2 TAIL 3 BOTH	Select arming for bombs, cluster bombs, and practice bombs.
SEL A SCAN SHIFT + RIGHT - LEFT	To shift A-scan display 1/8 full scale.
SEL BB OR CZ 1 BB 2 CZ	Select the BB or CZ of a 77B buoy.
SEL B SCAN FAR + INCR - DECR OPTNL	To select a desired B-scan false alarm rate.

Figure 8-2. Decision Cues and Purposes (Sheet 4)

DECISION CUE	PURPOSE
SEL CAT-ID 1 AIR F 6 SUB H 2 SURF F 7 AIR U 3 SUB F 8 SURF U 4 AIR H 9 SUB U 5 SURF H OPTNL	Select a category and identify for a track. Cue is optional in MODIFY CAT/ID and CLASSIFY (ESM) functions. SKIP CUE or TERM CUE SEQ deactivates function.
SEL CAT-ID 1 SURF FRIEND 2 SURF HOSTILE 3 SURF UNKNOWN OPTNL	Update a remote track. Cue is optional in MODIFY CAT/ID function. SKIP CUE or TERM CUE SEQ deactivates function.
SEL CATEGORY 1 FRIENDLY 2 UNKNOWN 3 HOSTILE 4 ALL	To select a category of multifixes to be redisplayed.
SEL CLASS AMP 1 PROPULSION UNK 2 PROPULSION CON 3 PROPULSION NUC	To allow the operator to select a submarine's type of propulsion for a fix or a multifix entry.
SEL CLASS AMP 1 PROPULSION UNK 2 PROPULSION CON 3 PROPULSION NUC OPTNL	Select a submarine propulsion type for fix entry. SKIP CUE or TERM CUE SEQ cause MODIFY CAT/ID function to deactivate.

Figure 8-2. Decision Cues and Purposes (Sheet 5)

DECISION CUE	PURPOSE
SEL CLEAR POINT 1 ESM CNT 4 AIR 2 SUB TRK 5 RDRSUB 3 SUR TRK 6 REMOTE	To allow the operator to select a category of contacts for clearing from TAC PLOT.
SEL CMD DEPTH 1 62B 2 62C – DEEP 3 C2C – EXTENDED	Instruct the operator of potential depth selection of DICASS buoy.
SEL CMPTR MODE 1 ACKNOWLEDGE	Request the operator to select the computer mode on the HACLC.
SEL CORR SOURCE 1 CDNU 2 ON-TOP 3 TACAN 4 RADAR	Select the source of data to be used in the correction of the aircraft geographic position.
SEL COURSE CNFDNC 1 GOOD 2 POOR	Instructs the operator to select his confidence in the track's course entry.
SEL COUNTRY 1 GE 6 CN 2 RU 7 NE 3 US 8 IT 4 UK 9 JA 5 FR 0 SW OPTNL	Select the country of an emitter. GE = Germany CN = Canada RU = Russia NE = Netherlands US = United States IT = Italy UK = United Kingdom JA = Japan FR = France SW = Sweden SKIP CUE or TERM CUE SEQ deactivates CLASSIFY function.

Figure 8-2. Decision Cues and Purposes (Sheet 6)

DECISION CUE	PURPOSE
SEL DATA RATE 1 FAST 2 NORM 3 SLOW	Select a specific data rate for the data terminal set.
SEL DEPTH 1 SHALLOW – 60FT 2 MEDIUM – 300FT 3 DEEP – 1000FT	Select the hydrophone depth of an inserted LOFAR sonobuoy.
SEL DEPTH 1 SHALLOW – 90FT 2 MEDIUM – 400FT 3 DEEP – 1000FT	Select the hydrophone depth of a DIFAR buoy.
SEL DEPTH 1 MEDIUM – 500FT 2 DEEP – 1000FT	Select the hydrophone depth of a VLAD 77B buoy.
SEL DEPTH 1 SHALLOW – 90FT 2 MEDIUM – 400FT 3 DEEP – 1500FT	Select the depth setting of a DICASS 62B and 62C with deep capability.
SEL DEPTH 1 SHALLOW – 90FT 2 MEDIUM – 400FT 3 DEEP – 2500FT	Select the depth setting of a DICASS 62C with extended depth capability for insert.
SEL DFLT TMPLTS 1 YES 2 NO OPTNL	Enables the operator to select default or PID ESM emitter response templates.

Figure 8-2. Decision Cues and Purposes (Sheet 7)

DECISION CUE	PURPOSE
SEL DEPOSIT SYMBOL 1 VECTOR 2 RANGE RADIUS 3 RANGE CIR	Select a symbol (active geographic aid) for deposit.
SEL DICASS 1 62B 2 62C – DEEP 3 62C – EXTENDED	Instruct the operator to specify which DICASS sonobuoy is available in the inventory.
SEL DIFAR 1 53B 3 53D	Instruct the operator to specify which DIFAR sonobuoy is available in the inventory or to be inserted.
SEL DST TYPE BX 1 D36 2 R36	Enables operator to select type of Mk 36 to be dropped from bomb bay stations. X = Stations B1, B2, B3, B4.
SEL EMTR FCTN 1 EW 6 FC 2 SS 7 NA 3 TA 8 AI 4 TT 9 UNKNOWN 5 MG OPTNL	To enable operator to designate the emitter function.
SEL ERROR DETECT 1 CORRECT 2 LABEL	Select the error detection processing to be used by the DTS.

Figure 8-2. Decision Cues and Purposes (Sheet 8)

DECISION CUE	PURPOSE
SEL ESM CAT-ID 1 AIR T 6 SUB H 2 SURF T 7 AIR F 3 SUB T 8 SURF F 4 AIR H 9 SUB F 5 SURF H OPTNL	To enable the operator to specify a category-identification for an emitter.
SEL ESM CLEAR 1 THRT 6 ALL 2 HOST 3 UNKN 4 FRND 5 SOI OPTNL	Enables the operator to clear categories of emitters from display on the ESM plot.
SEL ESM DSPL 1 THRT 6 CLR CAT 2 HOST 3 UNKN 4 FRND 5 SOI OPTNL	Enables the operator to specify the category of emitters displayed on the ESM plot.
SEL ESM INHIBIT 1 INHIBIT EMTR 2 DEINHIBIT EMTR 3 ENTER-MOD SECTOR 4 DELETE SECTOR	Enables the operator to inhibit stacked emitters, deinhibit selected emitters, inhibit a bearing sector, or deinhibit a bearing sector.
SEL ESM REINIT 1 REINIT 2 RELOAD-REINIT	To enable the operator to specify whether or not the ESM subsystem software program should be reloaded as part of the ESM subsystem reinitialization process.

Figure 8-2. Decision Cues and Purposes (Sheet 9)

DECISION CUE	PURPOSE
SEL FAULT STA 1 STA 5 2 STA 6	Designate the wing station for which the fault shall occur during simulation.
SEL FAR + INCR - DECR OPTNL	Select an increased or decreased FAR SKIP CUE allows function to proceed to other SET PRMTR selections.
SEL FIX CNFDNC 1 GOOD 2 POOR	Instruct the operator to select his confidence in the fix position.
SEL FREQ STD 1 INTERNAL 2 EXTERNAL	Select the desired frequency standard.
SEL FTP 1 NORM DESIG 2 NORM UNDESIG 3 MONITOR	Select the type of FTP.
SEL GRID ENTRY 1 LAT-LONG 2 X-Y	Select the type of grid entry the operator wishes to make.
SEL HACLC STA X 1 ACKNOWLEDGE	Select the station from which a Harpoon missile is to be released. X = 5 or 6.
SEL INH TABL CAT 1 THRT 2 HOST 3 UNKN 4 FRND OPTNL	Enables the operator to display the INHIBIT Tableau associated with a specific emitter category.

Figure 8-2. Decision Cues and Purposes (Sheet 10)

DECISION CUE	PURPOSE
SEL INT ENTER 1 ON + INC 2 OFF - DECR OPTNL	Select ON or OFF, INCR or DECR intensity for the target designator symbol. SKIP CUE allows function to proceed to other SET PRMTR selections.
SEL ISD-FT MK46-2 1 125D 4 500 2 275D 5 750 3 275 6 1000	Select MK46 MOD 2 torpedo initial search depth in feet. “D” in selection 1 and 2 indicates Doppler.
SEL ISD-FT MK46-5 1 125D 4 500 2 275D 5 850 3 275 6 1400	Select MK46 MOD 5 torpedo initial search depth in feet. “D” in selection 1 and 2 indicates Doppler.
SEL ISD-FT MK50 1 60 2 125 3 375 4 375D 5 850 6 1600	Select MK50 torpedo initial search depth in feet. “D” in selection 4 indicates Doppler.
SEL LBRY FORMAT 1 DETAIL 2 SEQUENCE 3 ALPHA 4 PLATFORM	To enable the operator to select an ESM library display format.

Figure 8-2. Decision Cues and Purposes (Sheet 11)

DECISION CUE	PURPOSE
SEL LIFE 1 1 HOUR 2 3 HOURS 3 8 HOURS	Select the life of a LOFAR, 53B, or 57B buoy.
SEL LIFE 1 H.5 HOUR 2 1 HOUR 3 2 HOURS 4 4 HOURS 5 8 HOURS	Select the life of a 53D or 77B buoy.
SEL LIFE 1 1 HOUR 2 4 HOURS 3 8 HOURS	Select the life of a 77A buoy.
SEL LINK PRMTRS 1 OAC 6 ERR 2 TNPL 7 SYNC 3 DLRP 8 FREQ 4 STA 9 MODE 5 RATE	Select the Link 11 parameter the operator wishes to specify or change.
SEL MANAGE ACTION 1 INITIATE 2 TERMINATE 3 DELETE	Select a track management action. Option 3 allows the operator to remove an association or alert that was not terminated due to missing a terminate or drop track data link message.

Figure 8-2. Decision Cues and Purposes (Sheet 12)

DECISION CUE	PURPOSE
SEL MOD TYPE 1 INSERT 2 REPLACE 3 DELETE 4 RESET SOI	Enables the operator to modify the active SOI Tableau or reset the modified SOI to PID conditions.
SEL MODE 1 PERISCOPE 2 NAV-WEATHER 3 SURFACE SEARCH 4 STANDBY 5 OFF	To select a radar mode.
SEL MODE-CEILING 1 PSV 20 2 PSV 50 3 ACT 20 4 ACT 50	Select a mode and ceiling for MK46 torpedoes.
SEL MODE-CEILING 1 ST20 2 60D 3 20 4 60	Select a mode and ceiling for MK50 torpedoes.
SEL MSL BIT 1 NO 2 YES	Designate whether or not the Harpoon missile BIT is to be commanded.

Figure 8-2. Decision Cues and Purposes (Sheet 13)

DECISION CUE	PURPOSE
SEL MULTI-FIX 1 ENTER 2 ALERT OPTION 3 CLASSIFY 4 DELETE	To enter, classify, or delete a multifix contact. Option 2 allows an alert status for multifix contacts.
SEL NET MODE 1 ROLL CALL 2 NET SYNC	Select a Link 11 net mode.
SEL NUM OF FIXES 1 1 2 2	Select the number of fixes on which the operator wishes to base the CONTIN PRED function.
SEL NUM TGT MSL 1 1 TGT 1 MSL 2 1 TGT 2 MSL 3 2 TGTS	Designate the number of targets.
SEL OPER LBRY 1 CREATE-MOD ENTRY 2 RESET OPER LBRY	Enables the operator to create or modify an operator library entry. Also allows the operator to clear any modifications from the entire operator library by selecting option 2.
SEL OPER LBRY TYP 1 SIMPLE 2 COMPLEX	Enables the operator to select the type of operator library entry to create. Simple contains the minimum elements necessary to develop a scan strategy while complex allows the operator to enter specific emitter parameters.
SEL OPLIB-SOI SRC 1 BOTH CURRENT 2 BOTH PID 3 CURRENT-PID 4 PID-CURRENT OPTNL	Enables the operator to select the current or PID values for the ESM Operator Library entries and SOI lists.

Figure 8-2. Decision Cues and Purposes (Sheet 14)

DECISION CUE	PURPOSE
SEL OWN EMER 1 DITCH 2 BAILOUT 3 RTN TO BASE	Select a Link 11 report of own aircraft emergency.
SEL PLATFORM 1 XXXXXXX 2 XXXXXXX 3 XXXXXXX 4 XXXXXXX 5 XXXXXXX OPTNL	To enable the operator to select one of five possible platform names for the emitter.
SEL PLOT DENSITY 1 LOW 2 HIGH	Enables the operator to select the display select category emitter display plot density (8 in low or 16 in high).
SEL PPI FAR + INCR - DECR	To select a desired PPI false alarm rate.
SEL PRI ID AMP 1 CONFIRMED FRIEND 2 AUXILIARY 3 SPECIAL MISSION 4 AMPHIBIOUS 5 LINE	To allow the operator to classify a “surface friend” radar fix or multifix.

Figure 8-2. Decision Cues and Purposes (Sheet 15)

DECISION CUE	PURPOSE
SEL PRI ID AMP 1 CONFIRMED FRIEND 2 AUXILIARY 3 SPECIAL MISSION 4 AMPHIBIOUS 5 LINE OPTNL	Displayed when SURF FRIEND/SURF F choice of SEL CAT/ID cue is selected. Select primary identity amplification to be recorded. SKIP CUE or TERM CUE SEQ completes cueing sequence. If cueing is mandatory, OPTNL will not appear.
SEL PRI ID AMP 1 EVALUATED UNK 2 ASSUMED FRIEND 3 ASSUMED HOST	To allow the operator to classify a surface unknown ship for a fix or multifix entry.
SEL PRI ID AMP 1 EVALUATED UNK 2 ASSUMED FRIEND 3 ASSUMED HOST OPTNL	Enter a primary identity amplification for a fix entry. SKIP CUE or TERM CUE SEQ causes MODIFY CAT/ID function to deactivate.
SEL PROCESSING 1 AMPLITUDE 2 THRESHOLD OPTNL	To select amplitude or threshold processing.
SEL RAD OPTION 1 NO RADIATE 2 DUMMY RADIATE 3 ANTENNA RADIATE	To select a radiate option during radar operational readiness test and radar tactical mission program diagnostic.

Figure 8-2. Decision Cues and Purposes (Sheet 16)

DECISION CUE	PURPOSE
SEL RATE 1 MIN 2 3 4 MAX OPTNL	Select a slew rate at which the FLIR shall be commanded to slew. SKIP CUE or TERM CUE SEQ causes FLIR SEARCH function slew rate to be set to previous entry or (if none), to 4.5°/second.
SEL RCVR GAIN + INCR − DECR OPTNL	Select increased or decreased radar receiver gain.
SEL RDR 1 1 FAR PPI 6 APER 2 FAR B 7 XMTR 3 RCVR GAIN LOAD 4 VID THRESH 5 VID GAIN OPTNL	To select radar parameters for modification.
SEL RDR 2 1 TDS INT 5 SHUTDN 2 RNG + HDG OVRD MARKS 6 ALIGN 3 PATTERN TDS 4 AMP PROC OPTNL	To select radar parameters for modification.

Figure 8-2. Decision Cues and Purposes (Sheet 17)

DECISION CUE	PURPOSE
SEL REMOTE TYPE 1 TRACKS 6 CNTCTS 2 SONBS 3 SPCL PTS 4 CONTIN PREDS 5 DATUMS OPTNL	Select the type of remote track data to be redisplayed. SKIP CUE or TERM CUE SEQ deactivates. Redisplay REMOTE function.
SEL REPORT PROC 1 ASSIGN 2 DROP	Select a Link 11 reporting procedure.
SEL RESERVE IND 1 RESERVE 2 BLANK OPTNL	Select a sonobuoy launch chute reserve indicator. Selection of RESERVE will reserve the sonobuoy launch chute. Selection of BLANK will eliminate an existing reserve indication. SKIP CUE redisplays ENT LINE NUM cue in STR LOAD function.
SEL RNG+HDG MARKS 1 ON + INCR 2 OFF – DECR 3 HDG AVAIL 4 HDG INHB OPTNL	To display range and heading markers, to increase or decrease their intensity.
SEL SEARCH MODE 1 RBL LRG 2 RBL MED 3 RBL SML 4 BOL	Select the Harpoon missile search mode and pattern.
SEL SEARCH-ALGN 1 SEARCH 2 ALIGN 3 DELETE	Allows the operator to select the FLIR SEARCH function or the FLIR ALIGN function and to delete existing FLIR bias.

Figure 8-2. Decision Cues and Purposes (Sheet 18)

DECISION CUE	PURPOSE
SEL SECTOR 1 0 6 50 2 10 7 60 3 20 8 90 4 30 9 120 5 40 10 FULL OPTNL	Select a sector width to be scanned by the radar. SKIP CUE or TERM CUE SEQ deactivates radar SECTOR SCAN function.
SEL SECTOR-DEGS 1 30 2 60 3 120 4 160 OPTNL	Select a FLIR slow sector width. SKIP CUE results in utilization of current sector width, if any. Otherwise, value is set at 60°. TERM CUE SEQ results in current values for both sector width and slew rate, if available. Otherwise, sector width is set at 60° and slew rate is set at 4.5°/second.
SEL SIM COND 1 DGTL FAULT 2 HUNG MISSILE 3 FIRE	Designate the simulation condition to occur during the simulation training.
SEL SIM OPERATOR 1 SENSO 2 COPILOT 3 TACCO	Designate the Harpoon missile simulation operator.
SEL SOURCE 1 TDS 2 REL A/C 3 REL NORTH OPTNL	To select the source for the searchlight or sector reference angle.
SEL SOURCE 1 TACAN 2 OTHER	Select the source for a gridlock.

Figure 8-2. Decision Cues and Purposes (Sheet 19)

DECISION CUE	PURPOSE
SEL SPCL PT 1 DOWNED AC 2 DISTRESSED VESSEL 3 MAN IN WATER	Select a special point.
SEL SPEED CNFDNC 1 GOOD 2 POOR	Instructs the operator to select his confidence in the track's speed entry.
SEL SRCE 1 INS 2 MAN ENT	Select the source of magnetic variation.
SEL SRCH PRIORITY 1 NORMAL 2 FAR 3 NEAR 4 RIGHT 5 LEFT	Designate the initial target search pattern.
SEL STA AVAIL 1 STA 5 2 STA 6 3 BOTH	Designate which wing station shall be available during simulation.
SEL STA MODE 1 PICKET 2 NCS	Select the aircraft operational mode as a Link 11 designated net control station or picket station.

Figure 8-2. Decision Cues and Purposes (Sheet 20)

DECISION CUE	PURPOSE
SEL STA X MSL HCV 1 HCV 0 6 HVC 7 2 HCV 1 7 HVC 3 3 HCV 2 4 HCV 5 5 HCV 6	Designate the Harpoon configuration value. X = 5 or 6. **Note** The re-attack capability of the HCV3 missile is not supported. The HCV3 missile is targeted as an HCV5 missile.
SEL SUBSURF CLASS 1 NO STATEMENT 2 POSSIBLE SUB 3 PROBABLE SUB 4 CERTAIN SUB 5 NON-SUB	To allow the operator to select a subsurface class for a fix or multitrack entry.
SEL SUBSURF CLASS 1 NO STATEMENT 2 POSSIBLE SUB 3 PROBABLE SUB 4 CERTAIN SUB 5 NON-SUB OPTNL	Select the classification of a subsurface target for a fix entry. SKIP CUE or TERM CUE SEQ causes MODIFY CAT/ID function to deactivate.
SEL SUMRY ACCEPT 1 ACCEPT 2 REJECT	Accept the reject all received ASW summary data. Acceptance indicates reporting responsibility is taken over.
SEL SUMRY MODE 1 TRANSMIT-S3 2 RECEIVE-S3 3 TRANSMIT-OTHER 4 RECEIVE-OTHER	Determine ASW summary mode. Selecting S3 causes automatic transfer of reporting responsibilities. Selecting OTHER inhibits automatic transfer of reporting responsibilities.

Figure 8-2. Decision Cues and Purposes (Sheet 21)

DECISION CUE	PURPOSE
SEL SYNC CONTROL 1 FAST + CONTIN 2 STORED	Select the method of synchronizing the DTS with received Link 11 data reports.
SEL TERM MANUV 1 POP-UP 2 SKIM	Designate the terminal maneuver of selected Harpoon missile.
SEL TEST PATTERN 1 PERISCOPE 2 NAV/WEATHER 3 SURFACE SEARCH 4 IMAGE 5 OFF	To select a desired scan converter test pattern.
SEL TEST SECTOR 1 10 6 60 2 20 7 90 3 30 8 120 4 40 9 FULL 5 50	To allow the operator to select a desired antenna sector width during testing.
SEL TGT AID 1 WIND ENTRY 2 DTOT	Allows entry of wind and designated time-on-target for Harpoon missile.
SEL TGT DATA TYPE 1 ADD DATA 2 CURRENT SYS CN 3 NEW SYS CN	Select target data type.

Figure 8-2. Decision Cues and Purposes (Sheet 22)

DECISION CUE	PURPOSE
SEL THRESHOLD + INCR - DECR OPTNL	To select a desired scan converter video threshold level.
SEL TILT 1 +10 6 -15 2 +5 3 0 4 -5 5 -10	To select a desired antenna tilt prior to radiating during radar operational readiness test and radar tactical mission program diagnostics.
SEL TIME SRCE 1 GPS 2 MANUAL	This cue selects the source of timing information to be used to activate or modify operational program time keeping.
SEL TRACK MANAGE 1 EMERGENCY 2 ASSOCIATION	Select the type of track management.
SEL TYPE 1 B82 2 R82 3 B83 4 B84	Select a type of bomb.
SEL TYPE 1 C20-2 2 C20-3	Select a type of cluster bomb.

Figure 8-2. Decision Cues and Purposes (Sheet 23)

DECISION CUE	PURPOSE
SEL TYPE 1 D36 6 M60 2 R36 3 M52 4 M55 5 M56	Select a type of mine.
SEL TYPE 1 K58 2 K25	Select a type of SMOKE buoy.
SEL TYPE 1 PBR 76 2 PBR 106	Select a type of practice bomb.
SEL TYPE 1 S84 – 1 2 S84 – 2 3 S84 – 3 4 S84 – 4	Select a type of SUS.
SEL TYPE 1 MK46 – 2 2 M46 – 5 3 MK50	Select a type of torpedo.
SEL VALIDITY 1 VALID 2 INVALID	Select the validity of operator previous switch decision.

Figure 8-2. Decision Cues and Purposes (Sheet 24)

DECISION CUE	PURPOSE
SEL VIDEO ADJUST 1 INCR BRT 2 DECR BAT 3 INCR CNTRST 4 DECR CNTRST	Select infrared video adjustment of increased or decreased brightness or contrast.
SEL VIDEO GAIN + INCR – DECR OPTNL	Select increased or decreased radar video gain. SKIP CUE allows function to proceed to other SET PRMTR selections.
SEL VLAD 1 77A 2 77B	Instruct operator to specify which VLAD buoy is available in inventory or to be inserted.
SEL WPN FTP STA 1 STA 5 2 STA 6	To designate to the GPDC which wing station the weapon FTP shall be computed and displayed.
SEL XMTR LOAD 1 ANTENNA 2 DUMMY LOAD	To select a desired transmitter load.
SEL ZERO PADS 1 YES 2 NO	Select or not select zeroization of the gridlock bias pads.
SUBSYSTEM OPTIONS 1 RE-INIT 2 DISABLE 3 CARRY-ON	Select an option to reconfigure a defective subsystem listed in the SYSTEM STATUS Tableau.

Figure 8-2. Decision Cues and Purposes (Sheet 25)

DECISION CUE	PURPOSE
TDS DISPLAY BIAS X ±NNN Y ±NNN 1 ACCEPT 2 REJECT	Gives the operator the option of accepting or rejecting a radar, TDS/ ALIGN, display bias.
TACAN GEO CORRECT RRR RAD DDD.D DME YYY XX.X AA.A NM Z.Z HRS 1 ACCEPT 2 REJECT	Accept or reject a TACAN geographic correction. RRR = the relative radial position from the tacan station to the A/C in degrees magnetic (0 through 359). DDD.D = slant range from A/C to tacan station (NM). XX.X = Suggested system drift speed in knots, 0.0 through 99.9. NM = Nautical miles. YYY = Suggested system drift direction (from which the system is acting) in degrees, positive clockwise from true North, 0 through 359. AA.A NM = Magnitude of the geographic correction in nautical miles, 0.0 through 99.9. Z.Z = Time in hours since the last accepted geographic correction, 0 through 9.9. HRS = Hours. In the event that XX.X or AA.A have magnitudes larger than their limits, the cue limit shall be displayed.
TEST SOI 1 YES 2 NO-NEXT SOI	To enable the operator to test the current or alternate SOI list prior to utilizing the list.
TURN HACLC PWR ON 1 ACKNOWLEDGE	Request the operator to turn on power to HACLC.
VERIFY OFFSET XXXX YDS 1 YES 2 NO	Verify the entered distance that the torpedo splash point will lead the target. XXX = Entered lead distance.

Figure 8-2. Decision Cues and Purposes (Sheet 26)

FUNCTION ACTIVATION CUE	PURPOSE
ALERT PERSONNEL BEFORE RADIATING PRESS ENTER	To notify the operator to alert personnel prior to radiating.
DESIGNATE TGT SPEED	Select the pseudo speed of the target by positioning the trackball.
ENGAGE AND HOLD ACLS – RADAR TEST SWITCH IN RADAR POSITION PRESS ENTER	To allow RF radiation during TD or ORT testing when aircraft is on the ground. **Note** This overrides weight-on-wheels logic.
HOOK AIMPOINT	To designate aimpoint for Harpoon missile in the RBL mode.
HOOK BOW	To enter the position of the bow of the target.
HOOK DESTRUCT PT	To designate the Harpoon missile destruct point position.
HOOK ENABLE PT	To designate the Harpoon missile enable point position.
HOOK LOCAL SYMBOL	Hook a locally entered radar fix symbol for computing a gridlock bias.
HOOK MIN RLSE RNG	To designate a weapon FTP on the minimum release range. Only displayed when a waypoint is selected for the designated station for which a FTP is to be entered.
HOOK NEXT POINT	Hook the next point during construction of a special pattern, or hook a second fix required to compute an estimated position.
HOOK QUADRANT	To hook the desired quadrant for expansion.
HOOK REMOTE SYMBOL	Hook a remote track for computing a gridlock bias.
HOOK SECOND CONIC	Hook a second conic to compute an intersection.
HOOK SECOND SYMBOL	Hook the second symbol during track association.
HOOK SRS ANTENNA	Establishes antenna position as basis for FLIR alignment.
HOOK STERN	To enter position of stern of target.
HOOK TARGET	To designate a radar contact for multi-fix processing.
HOOK WAYPOINT OPTNL	To designate the Harpoon missile waypoint position.
HOOKED OF HOOK EMITTER	Informs the operator of the hooked emitter number in relation to the number of stacked emitters.
OBSERVE ANTENNA SECTORING OVER ANTENNA VECTOR PRESS I AFFIRM	To allow the operator to verify the antenna sectoring over the selected vector.
POSITION HOOK	Position the hook to acceptable acquisition limits.

Figure 8-3. Function Activation Cues and Purposes (Sheet 1 of 2)

FUNCTION ACTIVATION CUE	PURPOSE
POSITION TDS OVER ALIGNMENT SYMBOL PRESS ENTER	Directs the operator to place the Radar TDS over the Hook alignment symbol during the Radar TDS/HOOK ALIGN procedure.
POSITION VECTOR TO DESIRED ANTENNA ANGLE IN DISPLAYED LIMITS PRESS ENTER	To select the radar antenna angle via the trackball vector for ORT and TD.
PRESS ENTER TO ACK ORDER	Indicate that an order not requiring receipt or compliance was witnessed.
PRESS ENTER TO OVERRIDE OVERTEMP SHUTDOWN	To allow the operator to override thermal shutdown of the radar subsystem.
PRESS ENT TO STOP	To stop inward and outward range searching.
REPOSITION CURSOR + SEARCH OUT – SEARCH IN	To manually search inward and outward in range while in the image mode.
TRACKBALL VECTOR TO DESIRED ANTENNA ANGLE IN DISPLAYED LIMITS PRESS I AFFIRM	To select the radar antenna angle via the trackball vector for ORT and TD.

Figure 8-3. Function Activation Cues and Purposes (Sheet 2)

LOADER CUE	PURPOSE
LOAD SAFE DATA 1 YES 2 NO	Enter decision to load safe data or not to load safe data.
SEL NAV CONFIG 1 NIU 2 NDCR	To select the correct navigation configuration aboard the aircraft.
SEL PROGRAM 1 OPERATIONAL 2 OPERATIONAL CONT 3 SYSTEM TEST 4 GPDC DIAG RECYCLE 5 FIRMWARE (Option 5 is for AYK-23 configured aircraft.)	To allow the operator to select the system to be loaded.
UHF RADIO CHANNELS 1 LOAD FROM TC 2 BYPASS TC LOAD	Enter a decision to load RSCI with PID UHF radio channel assignments or leave the current RSCI channel assignments intact.

Figure 8-4. Loader Cues and Purposes

PART VIII

Alerts

Chapter 9 — Alerts

CHAPTER 9

Alerts

9.1 INTRODUCTION

Alerts are messages displayed by the program to inform the operator of specific conditions or malfunctions in the avionics system.

There are seven types of alerts:

1. Executive (AYK-10 only)
2. System
3. Keyset
4. Function
5. Loader
6. Advisory
7. Recovery (AYK-10 only).

The GPDC has the capacity to backlog for display 10 system alerts and 12 function alerts. Keyset alerts are not stored in memory and are displayed until action is taken by the operator.

Alert descriptions that include all of the alert types are contained in Chapters 1 and 2. All alerts or representative alerts of similar groups are presented on the following pages with the meaning of the alert and the impact on the operation or action, if any, to be taken by the operator.

9.2 EXECUTIVE ALERTS (AYK-10 ONLY)

Executive alerts are display annotations rather than true alerts. They appear on the MPD immediately to the right of the cue area. The annotations inform all operators (except the pilot) that a portion of the executive program processing tables are overloaded. Refer to Chapter 1 for a more detailed description of executive alerts.

9.3 SYSTEM ALERTS

System alerts inform the crew that a system failure has occurred, or a critical condition exists which may require degraded mode operation. System alerts also display a subsystem status that is pertinent to a related function. System alerts are displayed on the top line of the alert area at all stations.

The program can store up to 10 system alerts in memory, including the one displayed (the latest system alert). The first four characters of system alerts represent the time that the alert was generated. System alerts remain in view until cleared by pressing the CLEAR ALERT switch, or until removed from the display by more recent alerts. A new alert in excess of the memory limit of 10 alerts causes the oldest alert in memory to be aged out.

Note

The pilot display is limited to display specific system alerts and does not include all system alerts shown in Figure 9-1. Figure 9-2 lists all the system alerts that are displayable on the pilot display.

9.4 LOADER ALERTS

Loader alerts are displayed during a GPDC loading routine. They appear in the lower left area of the MPD, informing the operator of key information concerning the status of equipment during the initialization or reinitialization of loading routines.

9.5 ADVISORY ALERTS

Advisory alerts are a series of advisories that appear in the left center area of the MPD when the loading routine is active. They inform the operator of the status of the current loader routine.

9.6 KEYSET ALERTS

Keyset alerts inform the operator that a condition exists that prevents normal processing of a selected function. Keyset alerts indicate a function prerequisite has not been completed or is incorrect. They also notify the operator when a particular limit has been reached or exceeded. The station requesting the function displays the associated keyset alert. Only one keyset alert appears at a station and is independent of keyset alerts at other stations. Each keyset alert is cleared by pressing any INCOS switch at that station.

9.7 FUNCTION ALERTS

Function alerts inform the operator of a subsystem status, notify the operator of a condition that inhibits completion of a task, and directs the operator to activate a function that will allow processing to continue at another station.

Function alerts appear at any station operating in the mode affected by the alert. One function alert can be displayed at each station. They are removed by any of the following:

1. By accomplishing the required function
2. Automatically by the subprogram
3. By aging out if more than six function alerts for that station are backlogged in memory.

Aging out is the automatic removal of the oldest alert to allow display of a new alert when the display capacity is exceeded. As new alerts are cleared from the display, the alerts held in memory move up into view.

9.8 RECOVERY ALERTS (AYK-10 ONLY)

There is only one recovery alert. Whenever any loader routine is executing a recovery procedure, the alert recovery in progress is displayed (flashing) in the lower left area of the MPD.

9.9 IN-FLIGHT TROUBLESHOOTING

When a system becomes inoperative during a flight, attempts should be made to restore the system to an operating condition.

The following troubleshooting procedures may be helpful in regaining the use of the failed equipment.

A complete list of avionic WRAs and their location is shown in FO-11 and FO-13. These figures will show the WRAs that are accessible in flight.

WARNING

Be sure that power to equipment is off before disconnecting and reconnecting cables to equipment.

The following general procedures may be helpful:

1. Make sure that the operating controls are in the proper positions for operation and that the indicator lights are indicating normally.
2. Determine that the equipment is adequately cooled. Turn the equipment off for at least 3 minutes before turning on again.
3. Reinitialize the subsystem by:
   a. First reinitializing through the REINIT matrix.
   b. Reinitializing through SYSTEM STATUS option in the PRGM CONT matrix.
4. Check and reset all circuit breakers on the affected system.
5. Repeat steps 1 through 4.
6. Reload program.
7. Open circuit breakers and reseat components. Reset circuit breakers.
8. Repeat steps 1 through 4.
9. Replace the TC.

ALERT	MEANING OF ALERT	ACTION/IMPACT
Note The following alerts are arranged in alphabetical order. The alert type is indicated in parenthesis before each alert. (A) — Advisory (E) — Executive (F) — Function (K) — Keyset (L) — Loader (R) — Recovery (S) — System		
(F) ACK CNTCT	A new contact is displayed on the tactical plot and must be acknowledged.	The alert is cleared when all new contacts have been acknowledged by pressing the ACK CNTCT switch.
(F) ACK LINK ORDER	An order has just been received via Link 11 and must be acknowledged.	The alert is cleared by pressing the ACK ORDER switch.
(2) ZZZZ AIDED INERTIAL AVAIL	GPS is available for aiding the inertial.	Select GPS via CDNU.
(2) ZZZZ ALERT TN XXXX EMERG	A track emergency received.	Emergency track is flashed.
(2) ZZZZ ALERT TN XXXX FORCE	A track Force Tell received.	Force Tell track is not filtered.
(S) ALIGN FLIR	Informs the pilot and originating operator that the FLIR has not been aligned when the ACQ TGT function is activated.	Consider aborting weapon release.
2) ZZZZ ALL MODES FAIL	The Radar Tactical Diagnostics detected an all Radar modes failure.	Check hardware and rerun diagnostic check.
(1) AMPLIFY LIMIT	The maximum number of symbols that may be selectively amplified is reached.	Additional selective Amplify item not permitted.
(F) ALPHA-NUM GROUP XX	An alphanumeric switch is stuck. XX = switch number.	Alert is displayed for 10 seconds.
(S) ZZZZ ALRT TRM YYYY	A track emergency or force-tell condition has been terminated. YYYY = Link track number.	None.

Figure 9-1. Description of Alerts (Sheet 1 of 26)

ALERT	MEANING OF ALERT	ACTION/IMPACT
(S) ZZZZ AMBIG XXXX	Alerts the operator that the required multifix track originally identified as one contact could now be one of a number of contacts.	Operator must determine which is target of interest. Ensure track symbol matches.
ZZZZ ARRAY DEF XX (AYK-10 ONLY)	GPDC memory array has failed. XX = number designation of defective array 0 through 15.	Failure of one or more arrays will cause an F load.
(A) AREA SRCH COMPL	To advise the operator that the radar multifix search of the selected search area has been completed and the results are being displayed.	None.
(A) AREA SRCH UNAVAIL	To advise the operator that a radar multifix search of the selected search area cannot be completed.	Verify hooked position is within currently selected radar range scale.
(S) ZZZZ ARM CONT DEF	Three successive transmission or redundancy errors have been detected in the armament control group signifying an armament logic defect. In all probability, the weapon will not release.	Repeat the procedure, reinitialize ARM/ORD, attempt manual weapon drop, or select jettison of individual weapon. Cycle MAN/AUTO switch at armament control panel.
(S) ZZZZ ASSN TRM YYYY	A track association has been terminated. YYYY = associated link track number.	None.
(1) ASSOCIATION LIMIT	10 local and/or remote associations are already entered.	Additional associations not created.
(A) BAD LOAD (AYK-10 ONLY)	The operational Loader has not successfully loaded the operational program. The problem can be caused by any one of the following: 1. Failure to read Operational Program from track 3. 2. Faulty transport cartridge (TC). 3. Faulty DMTU. 4. CP failure after OP load has started loading.	Attempt reload or cycle COMPUTER GROUP. Perform each of the following actions: 1. Reseat the TC, then load the Operational Program. 2. Run STP on DMTU. 3. Restart COMPUTER at Power Control Panel. 4. Cycle COMPUTER power OFF and ON at Power Control panel. 5. Try a new TC.
(F) BOMB DOORS CLOSED	Informs TACCO/SENSO that the bomb bay doors are closed.	The bomb bay doors must be opened for weapon release when TACCO/SENSO is the requesting station.

Figure 9-1. Description of Alerts (Sheet 2)

ALERT	MEANING OF ALERT	ACTION/IMPACT
(S) ZZZZ BOMB DOOR DEF	The bomb bay doors have not opened or closed within 13 seconds after GPDC sensed bomb bay door movement.	Defect is in the open-close mechanism. Check DOORS switch on Armament Control panel for proper indication and/or use EMER DOOR switch on the Armament Control panel to operate doors.
(F) B-SCAN NOT STABLE	The aircraft range to window center is less than one-half window depth. Shadow is seen at the bottom of the display.	If desired, radar range scale can be decreased. This action also cleans the display.
(S) ZZZZ CAINS DEF	The CAINS is reported No-Go to the GPDC navigation subprogram.	Check CAINS status in CDNU System Status page. Check CAINS power status (Ref: S-3B CAINS II In-Flight Procedures Guide).
(K) CAPACITY EXCD	The system capacity is already filled with a particular type entry and no space is available for the last attempted entry of that type.	A portion of the old data must be destroyed before new data can be entered.
(K) CAPACITY LIMIT	The system capacity limit of a particular type entry was reached with the last entry.	There is no available space for future entries without aging out the oldest entry of that type.
(2) ZZZZ CAT DIF-TN XXXX DLTD	Category difference detected on Link track.	Remove Air track is retained — reassign different TN to local surface track.
(2) ZZZZ CH A OVRTMP UDG	An over-temperature condition was detected in the TACCO/Pilot UDG.	Reinitialization may be necessary.
(2) ZZZZ CH B OVRTMP UDG	An over-temperature condition was detected in the SENSO/COTAC UDG.	Reinitialization may be necessary.
(4) ZZZZ CHECK FIX TIME	Accurate fix time needed for Midcourse Update.	Advisory only — assure GPS Mark Time has been performed.
(A) CHK TGT RNG — BRG	Indicates to the activating operator and pilot that the range/bearing to the target does not meet the criteria for missile release.	The pilot must fly aircraft into launch envelope.
(F) CLOSE BOMB DOORS	Alerts the pilot and COTAC to close the bomb bay doors.	The alert is cleared by pressing the DOORS switch on the Armament Control panel.
(1) CMPT INTSCT LIMIT EXCD	Positions exceed the Compute Intersection limits.	No intersection created.

Figure 9-1. Description of Alerts (Sheet 3)

ALERT	MEANING OF ALERT	ACTION/IMPACT
(K) CNTCT OFF SCALE	The contact that is to be acknowledged is off scale.	Increase display scale. Contact flashes at other stations where displayed.
(S) ZZZZ COMM CONFIG DEF	The configuration status reported by the communication equipment does not match the configuration commanded by the GPDC.	Reinitialize COMM or reconfigure DTS configuration through Link 11 Parameters cuing sequence.
(S) ZZZZ COM DEF	A defect in the COMM system has been detected.	Reinitialization may be necessary.
(S) ZZZZ COMM RNZ COMP	A power transient occurred in the CC and reinitialization to the configuration existing prior to failure was successful.	None.
(S) ZZZ CP-X DEF (L) CP-X DEF (AYK-10 ONLY)	A central processor has failed (either 0 or 1).	No action is necessary if System Status Tableau indicates defect but not disabled. If the System Status Tableau indicates a CP is disabled, a slowdown in processing may be noticed. The following procedures may be used to regain use of the disabled CP: 1. Attempt CARRY-ON through System Status Tableau. 2. Attempt REINIT through System Status Tableau. (Will result in system REINIT). 3. Select RESTART on TACCO Power Control panel and attempt to reload program.
(K) DATA EXTR UNAVAIL	The DMTU is not recording data extraction. The TC may be rewinding or reloading peripheral software.	Reload program if necessary, selecting operational continue load.
(S) ZZZZ DATA LATE	A CC data late interrupt has been received.	Check CC status. REINIT if necessary. Cycle net active.
(K) DATA SLNCE ACTIVE	Data silence mode is active.	Data will not be sent. DATA SLNCE must be deactivated or SHORT BC activated to send data.
(K) DATA UNAVAIL	The selected or requested data are unavailable.	None.
(F) DESELECT STA X	Station X should be deselected.	None.

Figure 9-1. Description of Alerts (Sheet 4)

ALERT	MEANING OF ALERT	ACTION/IMPACT
(S) ZZZZ DGTL RCDR DEF (L) DGTL RCDR DEF	A defect in the digital recorder (DMTU) has been detected.	Reinitialization may be necessary.
(2) ZZZZ DI CLEARED TN XXXX	Remote PU has cleared the DI code for a link track.	Re-enter DI Code if desired.
(2) ZZZZ DI CODE CHNG TN XXXX	Receive DI code change from LINK 11.	Received DI Code is retained on local track.
(2) ZZZZ DISCRT CONFLCT	HACLCS discrete conflict detected.	Reselect HACLC station.
(F) DISPLAY CONTROL XX (AYK-10 ONLY)	A display control switch is stuck. XX = switch number.	Alert is displayed for 10 seconds.
(A) DISPLAYS GOING BLANK	Informs the operator the displays are going blank due to reload condition.	This advisory is always accompanied by an appropriate system alert.
(S) ZZZZ DLRP LIM 100	The data link reference point system coordinate center distance is within 100 nautical miles of the limit.	None.
(S) ZZZZ DLRP LIM EXCD	The data link reference point system coordinate center distance has exceeded the limit.	Reestablish DLRP position within approximately 1,000 miles of aircraft position or return aircraft within approximately 1,000 miles of DLRP to be able to transmit data link messages.
(F) DMTU NOT RDY	Digital Memory Unit read/write heads are being repositioned.	None.
(S) ZZZZ DMTU RDY TRK X	DMTU heads have been repositioned to the beginning of the next available track and are ready for recording extracted data. X = 4.	None.
(S) ZZZZ DMTU REWIND	The DMTU is repositioning to the next available track for recording extracted data.	None.
(F) DR DEF	GPDC navigation has ceased. The GPDC is unable to process inputs from a heading source and/or all velocity sources.	Perform DR DEFECT procedures, page 4-2.

Figure 9-1. Description of Alerts (Sheet 5)

ALERT	MEANING OF ALERT	ACTION/IMPACT
(S) ZZZZ DROP TRK YYYY	A track has been dropped from the Link 11 net. YYYY = Link track number.	None.
(K) DSPL BUFFER EXCD	Operator's display buffer has overflowed.	Clear unnecessary symbols.
(S) ZZZZ DSPL-P DEF	A defect in the pilot display has been detected.	Reinitialization may be necessary.
(K) DSPL TABLE EXCD	Operator's display item table has overflowed.	Destroy old data.
(K) DSPL TABLE LIM	The 98th item has been stored at TACCO, SENSO, and copilot/ COTAC stations; the 65th item stored at the pilot station. There is room for only two more.	Destroy old data.
(S) ZZZZ DTS RESET	The DTS must be reset.	Cycle net active. If the DTS shows a defect, reinitialize the CC.
(K) DUPLICATE RF	The entered RF is already in use in the system.	Select another RF, if desired.
(4) ZZZZ EGPC X FAILURE	Advises the operator that an EGPC failure has been encountered during load time or after initialization.	The TMP is loaded in the available EGPC. If alert is displayed after initialization, operator should reload the TMP.
(S) ZZZZ EGPS DEF	The EGPS is reported No-Go to the GPDC navigation subprogram.	Check EGPS status in CDNU System Status page. Check EGPS power status (Ref: S-3B CAINS II In-Flight Procedures Guide).
(S) ZZZZ EINS DEF	The EINS is reported No-Go to the GPDC navigation subprogram.	Check EINS status in CDNU System Status page. Check EINS power status (Ref: S-3B CAINS II In-Flight Procedures Guide).
(2) ZZZZ EMERGENCY LIMIT	No additional emergency special points can be initiated.	Destroy obsolete data.
(1) EMERG TRACK INVALID	Hooked item is not valid for Emergency.	No Emergency created.
(S) ZZZZ EMER NOT XMTD	An own emergency was not transmitted.	Retransmit by deactivating DATA SLNCE or activating SHORT BC.
(S) ZZZZ END DATA EXTR	The end of track for data extraction has been reached.	No more mission data can be recorded.

Figure 9-1. Description of Alerts (Sheet 6)

ALERT	MEANING OF ALERT	ACTION/IMPACT
(S) ZZZZ END OF MSN	The END MSN option select switch has been pressed.	Prepares the data processing system for shutdown. Refer to END MSN option for further information.
(F) ESM AIL OVRLD	The ESM AIL is full and automatic purging has commenced.	None.
(S) ZZZZ ESM CNTCT EXC	To inform the operator that the system contact file was full when an attempt was made to automatically enter a new threat emitter into the system contact file.	Destroy old fixes.
(S) ZZZZ ESM CNTCT LIM	To inform the operator that the capacity of the system contact file has been reached as a result of automatic entry of a new threat emitter into the system contact file.	Destroy old fixes.
(S) ZZZZ ESM DEFECT	A defect in the ESM system has been detected.	Reinitialization may be necessary.
(S) ZZZZ ESM DOWN	To inform the operator that the ESM subsystem has been disabled.	ESM subsystem is unusable.
(S) ZZZZ ESM F XXXXXXX	A friendly ESM emitter has been qualified for entry into the AIL. XXXXXXX = emitter name.	None.
(S) ZZZZ ESM GO	To inform the operator that the ESM subsystem internal test(s) has completed execution and no defects were detected.	None.
(S) ZZZZ ESM H XXXXXXX	A new hostile ESM emitter has been qualified for entry in the AIL. XXXXXXX = emitter name.	None.
(S) ZZZZ ESM INIT	To inform the operator that the ESM subsystem is being initialized/reinitialized.	None.
(S) ZZZZ ESM INIT FLR	To inform the operator that the ESM subsystem has failed to initialize/reinitialize.	Retry initialization/reinitialization.
(S) ZZZZ ESM L DF DGRD	To inform the operator that ESM direction finding (DF) capability is degraded due to a left wing antenna failure.	If an accurate emitter location is required, reorientation of the aircraft is necessary.

Figure 9-1. Description of Alerts (Sheet 7)

ALERT	MEANING OF ALERT	ACTION/IMPACT
(S) ZZZZ ESM LD FLR	To inform the operator that the ESM subsystem program could not be loaded into the ESM subsystem.	Reload ESM program.
(S) ZZZZ ESM LOADING	To inform the operator that loading of the ESM subsystem software is in progress.	None.
(S) ZZZZ ESM LR DGRD	To inform the operator that ESM frequency coverage is degraded due to a left ESM receiver frequency band failure.	If monitoring of the affected frequency band is required, reorientation of the aircraft is necessary.
(S) ZZZZ ESM LR DOWN	To inform the operator that the left ESM receiver is defective and inoperable.	Emitters located on the left side of the aircraft will not be reliably detected.
(S) ZZZZ ESM LR OVRTMP	To inform the operator that the left ESM receiver has reached an overtemperature condition.	Remove ESM power.
(3) ZZZZ ESM OVRLD	The ESM subsystem cannot process all emitters detected due to emitter density overload.	Some Emitter data may be lost.
(S) ZZZZ ESM PDIP FLR	ESM preflight data (ID library, operator library, and SOI lists) failed to be loaded by the peripheral software loader.	Reload ESM PID.
(S) ZZZZ ESM R DF DGRD	To inform the operator that ESM direction finding (DF) capability is degraded due to a right wing antenna failure.	If accurate emitter location is required, reorientation of the aircraft is necessary.
(S) ZZZZ ESM RR DGRD	To inform the operator that ESM frequency coverage is degraded due to a right ESM receiver frequency band failure.	If monitoring of the affected frequency is required, reorientation of the aircraft is necessary.
(S) ZZZ ESM RR DOWN	To inform the operator that the right ESM receiver is defective and inoperable.	Emitters located on the right side of the aircraft will not be reliably detected.
(S) ZZZZ ESM RR OVRTMP	To inform the operator that the right ESM receiver has reached an overtemperature condition.	Remove ESM power.
(F) ZZZZ ESM SCAN CHNG	The ESM system has automatically modified the scan strategy.	None.
(S) ESM SCAN TIME EXCD	The ESM system cannot scan for all of the specified emitters.	Evaluate ESM SOI for possible adjustment.

Figure 9-1. Description of Alerts (Sheet 8)

ALERT	MEANING OF ALERT	ACTION/IMPACT
(S) ZZZZ ESM SC OVRTMP	To inform the operator that the ESM Signal Comparator has reached an overtemperature condition.	Remove ESM power.
(S) ZZZZ ESM T XXXXXXX	A new threat ESM emitter has been qualified for entry into the AIL. XXXXXXX = emitter name.	None.
(S) ZZZZ ESM TEST DONE	The ESM test performed by the IFPM subprogram is complete.	None.
(S) ZZZZ ESM U XXXXX	A new unknown ESM emitter has been qualified for entry into AIL. XXXXX = frequency.	None.
(A) ZZZZ EXTR RESUMED	Data Extraction is no longer suspended.	None.
(A) ZZZZ EXTR SUSPNDED	Extraction has been suspended while DMTU is performing other tasks (e.g., reloading ESM).	Periodic or manual extractions performed while DMTU is busy with other tasks will not be saved.
(L) - FAIL LOAD -	The selection loader could not complete the loading process.	PRESS RESTART alert always accompanies the advisory. On TACCO Power Control panel, place COMPUTER RESTART switch to ON.
(K) FIX UNRELIABLE	The fix is based on contacts that were entered at times greater than 10 minutes apart.	Attempt to obtain more accurate fixing data or abort the function by pressing the CMPT INTSCT switch.
(S) ZZZZ FLIR COOL DEF	A defect in the FLIR cooler has been detected (20 min).	Reinitialization may be necessary.
(S) ZZZZ FLIR COOLED	The FLIR cryogenic cooler has cooled the FLIR to operating temperature.	None.
(S) ZZZZ FLIR DEF	A defect in FLIR system has been detected.	Reinitialization may be necessary.
(S) ZZZZ FLIR EX-R DEF	The FLIR extend-retract mechanism is defective and has not fully extended or retracted the FLIR turret.	Reinitialize FLIR, then attempt to extend or retract the FLIR turret again. If unable to extend FLIR fully, FLIR is unusable. FLIR can be retracted in flight by COTAC emergency override switch.
(S) ZZZZ FLIR RETRACTED	FLIR turret has been fully retracted.	None.

Figure 9-1. Description of Alerts (Sheet 9)

ALERT	MEANING OF ALERT	ACTION/IMPACT
(S) FLR SAFE DATA	Load safe data has had a failure.	None. Be aware that safe data will no longer be available.
(S) ZZZZ F-TELL YYYY	The force commander has placed special emphasis on the specified track. YYYY = Data link track number.	None.
(A) ZZZZ FLUX VLVE HDG	Informs operator that the source of heading data to the GPDC navigation subprogram has switched from an inertial source to a flux valve source.	None.
(K) FUNCTION ACTVTD	Short BC function is activated.	None (20 to 30 seconds to complete).
(1) FUNCTION UNAVAILABLE	Selected item is not recallable after being destroyed.	Select another item.
(A) GOOD LOAD	Operational loader has successfully loaded the selected program.	None.
(4) ZZZZ GMA BANK FAIL NO DEGRADATION EXPECTED	Advises the operator that a GMA Bank failure was encountered during load time.	The program and recovery data are stored in the available GMA Banks, possibly in a noncontiguous manner. Full TMP performance and recovery are to be expected.
(4) ZZZZ GMA X FAIL NO QUICK RELOAD	Advises the operator that a GMA failure was encountered during load time.	The program is loaded into the operational GMA. However, there is no Quick Reload capability.
(S) ZZZZ GPDC ALT INVLD	Informs operator when in the GPDC altitude mode that the altitude data received by the GPDC navigation subprogram is determined to be invalid.	Switch GPDC altitude mode source using NAV parameters Tableau. If still invalid, switch to the system altitude mode in the NAV parameters Tableau. If still invalid, switch system altitude mode source using EFIS ALT switch.
(A) GPDC DIAG CYCLE LOAD (AYK-10 ONLY)	The GPDC diagnostic is being loaded in response to operator selection of option 4 (GPDC DIAG recycle) of the SEL PROGRAM loader cue.	Recycle Options Tableau is displayed (in Test Load).
(A) GPDC DIAG LOAD DISPLAY GOING BLANK FOR UP TO 250 SEC	The displays are going blank for execution of the GPDC diagnostics load.	None.

Figure 9-1. Description of Alerts (Sheet 10)

ALERT	MEANING OF ALERT	ACTION/IMPACT
(S) ZZZZ GPS DEF	The GPS (MAGR) is reported No-Go to the GPDC navigation subprogram.	Check GPS status in CDNU System Status page. Check GPS power status (Ref: S-3B CAINS II In-Flight Procedures Guide).
(1) GRID COORD LIMIT EXCD	Grid coordinates cannot be computed.	Change Grid Coordinate center.
(2) ZZZZ HACLCS FAIL	HACLCS failure detected — computer mode inactive.	Check Computer Mode selection.
(2) ZZZZ HACLCS X DEF	A defect in the HACLCS has been detected.	Reinitialization may be necessary.
(2) HCV CONFLICT	HCV conflict detected between the HCV and the Kill Stores tableau.	Check Kill Store tableau configuration.
(4) HIO FAIL	HIO failure detected after initialization.	Program reload may be necessary after checking HIO interfaces.
(3) ZZZZ ID CHANGE ORDER	Received an ID Conflict Change Order for local surface track.	Press ID CONFLC switch to view ID Change and acknowledge.
(3) ZZZZ ID CONFLICT	Identity conflict exists between local surface and received surface track.	Press ID CONFLC switch to view ID difference and acknowledge change.
(2) ZZZZ IFF CLEARED TN XXXX	Remote clear IFF request is received for a local track.	Reevaluate active IFF and reset if desired.
(2) ZZZZ IFF CHNG TN XXXX	Received IFF code change from LINK 11.	Received IFF retained for local track — no further action required.
(2) ZZZZ IFF DOWN	The Radar Tactical Diagnostics detected an IFF trigger failure.	Check hardware.
(1) INCOMPLETE PARAMS	Attempted to initialize data link without all mandatory parameters entered.	Check Link Parameters tableau for required entries.
(2) INIT COMPLETE	Program initialization is completed.	No action.
(F) INSTR EXECUTE XXXX	Informs the operator that a program task has executed an illegal instruction outside of his limit. XXXX = identification of task. Program is deteriorating.	None.
(K) INSTR LIMIT XXXX	No instruction in address or no such address. May be caused by hardware/memory failure or a program scramble.	Note XXXX numbers for maintenance. Same as ILLEGAL INSTRUCTION.

Figure 9-1. Description of Alerts (Sheet 11)

ALERT	MEANING OF ALERT	ACTION/IMPACT
(K) INSUFFICIENT DATA	There is insufficient data to prompt the selected target.	Fulfill data requirements.
(2) ZZZZ XXXXXX INTER-FACE ERR	An interface error or data out of range has been detected for XXXXXX subsystem.	Reinitialization of subsystem may be necessary.
(1) INVALID ASSOCIATION	The two selected items are not valid for track Association.	No Association created.
(2) ZZZZ INVALID CAT-TN XXXX	An attempt has been made to change to category AIR or LAND on a local item assigned to LINK.	Drop Track from Link or assign a different category.
(K) INVALID ENTRY	An incorrect or incomplete entry has been made in response to a cue.	Make correct entry.
(1) INVALID OPERATION	ESM emitter to be destroyed has been entered as a system contact.	Must destroy system contact.
(1) INVALID PU OR RU	Entered value is not existing RU or PU.	No Update request is sent.
(1) INVALID REMOTE	Hooked REMOTE is not valid for GRIDLOCK.	Remote item must match category-identity criteria.
(S) ZZZZ IOC-X DEF (L) IOC-X DEF (AYK-10 ONLY)	Input-Output Controller (IOC) de-fect has been detected. X = 0 or 1.	Reinitialize through System Status as necessary.
(F) INCR SPD	Assist the pilot in satisfying the Harpoon Missile Speed-Altitude release envelope.	Increase aircraft speed.
(F) INCR SPD DECR ALT	Assist the pilot in satisfying the Harpoon Missile Speed-Altitude release envelope.	Increase aircraft speed and decrease aircraft altitude.
(F) INCR SPD INCR ALT	Assist the pilot in satisfying the Harpoon Missile Speed-Altitude release envelope.	Increase aircraft speed and altitude.
(2) ITEM NOT ASSIGNABLE	Hooked item is not eligible for TN assignment.	No Link item is assembled for reporting.
(F) KEYSET FUNCTION XX	Indicates last keyset function switch activated. This may indicate a misalignment or jammed switch. XX = switch number.	Alert is displayed for 10 seconds.

Figure 9-1. Description of Alerts (Sheet 12)

ALERT	MEANING OF ALERT	ACTION/IMPACT
(F) KEYSET NUMERIC XX	Indicates last keyset function switch activated. This may indicate a misalignment or jammed switch. XX = switch number.	Alert is displayed for 10 seconds.
(K) LIMITS EXCD	The position of hook is not within the proper range.	Function is deactivated.
(K) LINK FILTER ACTIVE	Operator attempted to assemble report on a track located within a filtered region or on a track, which meets the criteria of an active CAT/ID filter. (Transmit filter active.)	Data link message was not transmitted.
(K) LINK 11 DOWN	A power transient occurred in the CC while the net was active and recovery to the original configuration was not obtained.	Reinitialize COMM. Unable to transmit or receive data link messages.
(4) ZZZZ LINK INITIALIZING	Link net is in Receive mode — no transmit has been initiated.	If DATA SILNCE is not active, check COM interface for possible problem and reinitialize Link.
(K) LINK NET INACT	Link 11 net is inactive.	Activate NET ACTIVE to transmit data.
(F) LINK ORDER PENDING	An order, in addition to the order displayed, has been received and is in GPDC memory.	Alert is cleared by pressing ACK ORDER.
(R) LOAD STILL IN PROGRESS DISPLAYS GOING BLANK (AYK-10 ONLY)	The load sequence is still active and waiting for the alternate CP to perform the load.	None.
(2) ZZZZ LOST CONTACT TN XXXX	Received lost contact indication from LINK 11.	No further action required.
(S) ZZZZ LOST TRK XXXX	Notifies operator that no centroid return was received for the third consecutive iteration on the applicable multi-fix.	View radar plot to determine if contact is no longer present.
(F) MATRIX A SELECT XX	A matrix A switch is stuck. XX = switch number.	Alert is displayed for 10 seconds.
(F) MATRIX B SELECT XX	A matrix B switch is stuck. XX = switch number.	Alert is displayed for 10 seconds.

Figure 9-1. Description of Alerts (Sheet 13)

ALERT	MEANING OF ALERT	ACTION/IMPACT
(F) MAX TAS XXX KTS	Informs the pilot and COTAC that the desired orbit circle radius may be maintained by AFCS at the displayed maximum aircraft TAS.	None.
(S) ZZZZ MEAS COMPL	To inform the operator that the ESM subsystem has completed the emitter measurement requested for an emitter.	None.
(S) ZZZZ MEAS UNAVAIL	To inform the operator that the ESM subsystem was unable to perform the emitter measurement requested for an emitter.	None.
(A) ZZZZ MIDCRS UPDATE	Informs the operator that a MID COURSE UPDATE for the SLAM-ER has been sent over the NIU.	None.
(2) ZZZZ MIDCRS UPDATE	Midcourse Update has been successfully completed.	Advisory only — no further action required.
(4) ZZZZ MIO X FAIL DGTL REC DEF FAIL LOAD	Advises the operator that a failure was encountered in the digital recorder (DMU) or the MIO interface during load time. Program has failed to load.	Reinitialization may be necessary.
(A) ZZZZ MODE CHNG	An ESM emitter has changed modes.	None.
(S) ZZZZ MPD-X DEF	TACCO, SENSO, or COTAC MPD has failed. X = T (TACCO), S (SENSO), or C (COTAC).	Reinitialization may be necessary.
(S) ZZZZ MRG TRK XXXX	Notifies operator that the applicable multi-fix has merged with another contact.	View radar plot to determine which contact is target-of-interest.
(A) MSL AWY STA X	Indicates that the missile has left the wing pylon. X = 5 or 6.	None.
(A) ZZZZ MSL BIT RUN	Indicates missile BIT is in progress.	None.
(S) ZZZZ MSL DGTL FAIL	Indicates a missile digital failure.	None.
(S) ZZZZ MSL SIM FAIL	Indicates that the Harpoon Missile Simulation discrete has not been received when expected.	Initiating a computer reload may correct failure.
(S) ZZZZ MSL RLSE INIT	Indicates that a missile release sequence has been initiated.	None.

Figure 9-1. Description of Alerts (Sheet 14)

ALERT	MEANING OF ALERT	ACTION/IMPACT
(A) ZZZZ MSL WARMUP	A delay that occurs immediately following selection of the Harpoon missile on the HACLC.	None.
(F) MSTR ARM OFF	Informs the COTAC, TACCO, and SENSO that the MASTER ARM switch is in the OFF position. Pilot is presented with alert TURN ON MSTR ARM.	The MASTER ARM switch must be turned ON to allow any weapon release except sonobuoy and wing stores jettison.
(1) NAV INTF DOWN	Attempt to send Midcourse Update information to NIU failed.	Check NIU interface — reinitialization may be necessary.
(S) ZZZZ NAV INTF DOWN	The GPDC is unable to communicate with the external navigation system via either NIU channel.	Check NIU status in CDNU System Status page. Check NIU power status. Reinit NIU channels in GPDC System Status Tableau. Reinit NAV using GPDC REINIT matrix.
(S) ZZZZ NAV POS UNVL	The GPDC is unable to acquire an initial position from the NIU during navigation subprogram initialization.	Check CDNU System Status page. Check NAV Sensors power and alignment status. Attempt to bring up a valid NAV Select Status mode on CDNU. Reinit NIU channels in GPDC System Status Tableau. Reinit NAV USING GPDC REINIT matrix.
(A) ZZZZ NAV SRCE CHNG	The CDNU has switched NAV select modes, which in turn switches sources of data received by the GPDC navigation subprogram.	None.
(S) ZZZZ NET IN SYNC	Net is synchronizing.	None.
(S) ZZZZ NIU CH-X DEF	A defect in channel 1 or 2 of the navigation interface unit has been detected. X = 1 or 2.	Reinitialization may be necessary.
(1) NO CURRENT CONFLICT	ID CONFLICT selected with no previous Hook or received conflict pending.	Switch depression ignored.
(S) ZZZZ NO DATA EXTR	Data extraction has stopped.	None.
(1) NO DROP TRACK WSP	Can not send Drop Track on Weapon Splash Point.	Must use Destroy Data to remove.

Figure 9-1. Description of Alerts (Sheet 15)

ALERT	MEANING OF ALERT	ACTION/IMPACT
(S) ZZZZ NO DROP STA X	A weapon failed to drop from the indicated station (X) during an attempted weapon release. All logic is OK and the weapon rack is cocked.	Attempt release again or select jettison for the individual weapon station. Check circuit breakers (3-B-3, 3-E-14, 3-F-14). For bomb bay stores, check TORP PRESET switch.
(F) NO FTP	Informs the pilot and COTAC that no fly-to-point was designated before CMPTR was selected on the Flight Mode selector panel.	Entry of fly-to-point or deselection of CMPTR will clear the alert.
(K) NO HOOK VERIFY	Operator has failed to perform the required hook verify function.	Perform HOOK VERIFY.
(K) NO INTERSECTION	The designated conics do not intersect at greater than critical angle or the LOP intersects more than 200 miles from aircraft position.	Function is terminated.
(A) ZZZZ NO LNCH INIT	The expected ITL discrete was not received from the HACLCS.	None.
(K) NO ON-TOP	The operator has failed to perform the required on-top function.	Function deactivates.
(2) ZZZZ NO RECOVERY – PRESS RESTART	Failed GMA detected after TMP initialization.	Initiate the load process again.
(S) ZZZZ NO RLS SLC XXX	The sonobuoy failed to release from the sonobuoy launch chute designated in the alert. XX = sonobuoy launch cute number.	Attempt to release again Attempt to release manually. Select another sonobuoy.
(S) ZZZZ NO WND UPDATE	Update of wind speed and direction has ceased for at least 1 minute.	The navigation subprogram is no longer computing the wind. The value being used may be erroneous. The operator can modify the values in the NAV Parameters Tableau.
(F) NON-REAL TIME ESM	Informs the pilot that the ESM threat warning display plot is using the last valid data prior to the ESM subsystem being disabled.	None.
(1) NOT ASSIGNED TO LINK	Hooked item not assigned to LINK.	Cannot complete action (e.g. Drop Track).
(K) NOT AVAIL	The switch depression just completed does not apply to any available functions.	Select another function.

Figure 9-1. Description of Alerts (Sheet 16)

ALERT	MEANING OF ALERT	ACTION/IMPACT
(K) NOT AVAILABLE	The function the operator attempts to activate or the selection made is not available.	Select another function or select another selection.
(K) NOT IN SYSTEM	Track number selected for TN CALL is not in the system.	None.
(1) NO WND UPDATE	NAV-ON-DECK function processing.	No action required — advisory only.
(A) OP DEGRADED SYS LOAD (AYK-10 ONLY)	A degraded operational program load is in progress. Selection loader has encountered a memory failure.	Attempt to regain use of a full operational program by performing following steps: 1. Cycle GPDC power off and on. 2. Check and rest GPDC circuit breaker. 3. Cool avionics system. 4. Reinitialize system. 5. Load STP (do not run), then load Operational program. If above steps fail to reestablish program, either use the degraded program or end mission.
(A) OP DEGRADED SYS RELOAD (AYK-10 ONLY)	A degraded system reload is in progress.	None.
(A) OP SYSTEM RELOAD	The operational program is being reloaded.	The alert is cleared when reload is completed.
(F) OPEN BOMB DOORS	Informs the pilot and COTAC that the bomb bay doors are closed and must be opened for weapon release.	The alert is cleared when doors are opened by pressing the DOORS switch on the Armament Control panel.
(F) OPERAND LIMIT XXXX (AYK-10 ONLY)	No instruction in address or no such address.	Note XXXX numbers for maintenance. If many alerts are seen and if task is necessary, reload program.
(F) OPERAND READ XXXX (AYK-10 ONLY)	Informs operator that a program task attempted to read data outside of its limit. XXXX = identification of task. Program is deteriorating.	None.

Figure 9-1. Description of Alerts (Sheet 17)

ALERT	MEANING OF ALERT	ACTION/IMPACT
(F) OPERAND WRITE XXXX (AYK-10 ONLY)	Informs operator that a program task attempted to destroy data outside of its limit. XXXX = identification of task. Program is deteriorating.	None.
(A) OPERATIONAL LOAD	Operational program is being loaded.	Operational program takes approximately 4 minutes to load.
(F) OPTION SELECT A XX	An Option Select A switch is stuck. XX = switch number.	Alert is displayed for 10 seconds.
(F) OPTION SELECT B XX	An Option Select B switch is stuck. XX = switch number.	Alert is displayed for 10 seconds.
(K) ORBIT LIMIT	An orbit radius less than the minimum turn radius of the aircraft has been entered.	Enter a new orbit radius.
(S) ZZZZ ORBIT LIMIT	Informs the crew that the range or Doppler calculated orbit of a point of interest is less than the minimum tuning radius of the aircraft.	Use recommended Orbit option select function to establish an acceptable orbit radius.
(3) ZZZZ ORDER RCVD PU XXX	Order message received addressed to OAC PU TN or TN177.	Select Order Reply switch to view Order command and respond.
(L) POWER TOLERANCE (AYK-10 ONLY)	The GPDC has exceeded power tolerance limits.	Press restart.
(S) ZZZZ PNL-X DEF	A defect in the pilot or COTAC INCOS has been detected. X = C (COTAC) or P (Pilot).	Reinitialization may be necessary.
(L) PRESS RESTART	An unrecoverable error has occurred during program loading.	Initiate the load process again. The alert is always accompanied by a second alert indicating the specific error.
(S) ZZZZ PRG WARN YY	A participating unit may be purged because of not receiving an update in the last 2 minutes. YY = PU address.	Usually no action. If more than one alert, check own link system.
(F) PRIVLGD INSTR XXXX	Informs the operator that a program task has executed a privileged instruction. XXXX = identification of task.	None.

Figure 9-1. Description of Alerts (Sheet 18)

ALERT	MEANING OF ALERT	ACTION/IMPACT
(S) ZZZZ PU ERROR YY	Informs the crew that 11 consecutive bad frames of data have been received from the specified PU. YY = address of reporting PU or if YY = zero, the PU address is unknown.	If in LABEL, data from PU is not processed. If in CORRECT, data may be in error.
(2) ZZZZ PU XX INACTIVE	Remote PU has gone inactive.	PU Reception Quality reset to zero — can assign PU number to local track to report PU position if desired.
(2) ZZZZ PU XX NOT IN TABLEAU	Five consecutive reports have been received by a PU not in tableau.	Add PU to PU List in Link parameters tableau to receive PU data.
(S) QUICK RELOAD FAIL (AYK-23 ONLY)	The quick reload option from Operational Continue Load has failed.	Operator must initiate full system reload.
(S) ZZZZ RAAWS DEF	No-Go Status has been reported in the CDNU.	Reinitialization may be necessary. Check RAAWS in CDNU System Status page.
(S) ZZZZ RADAR DEF	May be caused by Off-Line Control Unit (OLCU) not in INCOS. Normal on deck or with weight-on-wheels. Radar may not have timed out.	If the radar is operating normally, ignore. Check OLCU switch positions. Reinitialize RADAR. Wait for time out.
(S) ZZZZ RADAR DOWN	A WRA/SRA failure was detected by the Radar Tactical Diagnostic resulting in the radar being inoperable.	Reinitialize via System Status. Recycle system power. If neither is successful, the radar is inoperable.
(F) RADAR LOCKED-ON	Radar automatic tracking is locked onto a target.	None.
(S) ZZZZ RADIATION ON	Program attempt to turn off radar radiation has failed.	Turn off radiation by use of the Radar Off-Line Control Unit. Reinitialize RADAR. Pull circuit breakers (1-E-10, 1-B-10).
(2) ZZZZ RANGE LIMIT TN XXXX	Local Link track is outside of reporting range from OAC — approximately 512 miles (X/Y).	No action required — once track is within distance limit reporting will resume.
(S) ZZZZ RCK UNKL FAIL	Selected missile rack has failed to unlock within the required time.	Deselect wing station.
(S) ZZZZ RDR ANT DGRD	An antenna SRA failure was detected by the Radar Tactical Diagnostic resulting in the radar antenna being degraded.	Reinitialization may be necessary.

Figure 9-1. Description of Alerts (Sheet 19)

ALERT	MEANING OF ALERT	ACTION/IMPACT
(2) ZZZZ RDR FAIL	A WRA failure was detected by the Radar Diagnostics resulting in a degraded Radar.	Check hardware.
(S) ZZZZ RDR GO	The Radar Operational Readiness Test ran to completion without detecting a failure.	None.
(S) RDR CORR ZZZZ	Advise the operator that a radar correlation has been detected for the indicated non-radar track.	If correlation data are correct, utilize multi-fix symbols to update track position.
(S) ZZZZ RDR IMAG FAIL	The Radar Operational Readiness Test detected an image mode failure.	Troubleshoot if possible.
(S) ZZZZ RDR INCM RAD	The Radar Operational Readiness Test was not run as a complete test.	None.
(S) ZZZZ RDR IU CLRTMP	An overtemperature condition no longer exists in the RIU.	None.
(S) ZZZZ RDR IU OVRTMP	An overtemperature condition exists in the RIU.	Operator has 2 minutes to override automatic overtemperature shutdown in the event radar is a mission or safety of flight requirement.
(S) ZZZZ RDR NAV FAIL	The Radar Operational Readiness Test detected a NAV/WX mode failure.	Troubleshoot if possible.
(S) ZZZZ RDR PER FAIL	The Radar Operational Readiness Test detected a periscope mode failure.	Troubleshoot if possible.
(S) ZZZZ RDR PS CLRTMP	An overtemperature condition no longer exists in the programmer-power supply.	None.
(S) ZZZZ RDR PS OVRTMP	An overtemperature condition exists in the programmer-power.	Operator has 2 minutes to override automatic overtemperature shutdown in the event radar is a mission or safety of flight requirement.
(S) ZZZZ RDR RX CLRTMP	An overtemperature condition no longer exists in the receiver.	None.
(S) ZZZZ RDR RX OVRTMP	An overtemperature condition exists in the receiver.	Operator has 2 minutes to override automatic overtemperature shutdown in the event radar is a mission or safety of flight requirement.

Figure 9-1. Description of Alerts (Sheet 20)

ALERT	MEANING OF ALERT	ACTION/IMPACT
(S) ZZZZ RDR SC CLRTMP	An overtemperature condition no longer exists in the scan converter.	None.
(S) ZZZZ RDR SC OVRTMP	An overtemperature condition exists in the scan converter.	Operator has 2 minutes to override automatic overtemperature shutdown in the event radar is a mission or safety of flight requirement.
(S) ZZZZ RDR SE CLRTMP	An overtemperature condition no longer exists in the synchronizer-exciter.	None.
(S) ZZZZ RDR SE OVRTMP	An overtemperature condition exists in the synchronizer-exciter.	Operator has 2 minutes to override automatic overtemperature shutdown in the event radar is a mission or safety of flight requirement.
(S) ZZZZ RDR SURF FAIL	The Radar Operational Readiness Test detected a surface search mode failure.	Troubleshoot if possible.
(S) ZZZZ RDR TEMP SHDN	The RIU has performed thermal shutdown of the radar system.	Secure radar.
(S) RECOVERY IN PROGRESS (AYK-10 ONLY)	Informs the operator that recovery procedures are being exercised for the DMTU. This alert applies only to DMTU recovery procedures and should flash at a periodic rate.	None. Check program status/ system status after reload.
(F) RELEASE ACLS-RADAR	Notifies the operator to release the ACLS/RADAR switch.	Release ACLS/RADAR switch.
(S) ZZZZ REM ALRT EXCD	System data space is not available for track alerts received through the data link net.	Destroy obsolete data to make room.
(S) ZZZZ REM ASSN EXCD	System data space is not available for track associations received through the data link net.	Destroy obsolete data to make room.
(S) ZZZ*Z* REM BUOY EXCD	System data space is not available for sonobuoys received through the data link net.	Destroy obsolete data to make room.
(S) ZZZZ REM CNCT EXCD	System data space is not available for contacts received through the data link net.	Destroy obsolete data to make room.

Figure 9-1. Description of Alerts (Sheet 21)

ALERT	MEANING OF ALERT	ACTION/IMPACT
(S) ZZZZ REM DATM EXCD	System data space is not available for data received through the data link net.	Destroy obsolete data to make room.
(1) REMOTE ASSOCIATION	Attempted to associate two tracks which have already been associated by a remote PU.	Only locally created associations can be terminated.
(2) ZZZZ REMOTE OVERLOAD	Only room for five more remote tracks in database.	Set (additional) filters — select REMOTE OVRLOAD switch.
(2) ZZZZ REMOVE XXXXXX LIMIT	Link track category specified by XXXXX has reached capacity.	Set (additional) filters — clear/destroy obsolete data.
(S) ZZZZ REM SP PT EXC	System data space is not available for special points received through the data link net.	Destroy obsolete data to make room.
(S) ZZZZ REM TK FX EXC	System data space is not available for tracks or fixes received through the data link net.	Destroy obsolete data to make room.
(S) ZZZZ REM WP PT EXC	System data space is not available for weapon splash points received through the data link net.	Destroy obsolete data to make room.
(K) REPOSITION HOOK	The hook is incorrectly placed.	Reposition hook.
(S) ZZZZ RNZ XXXXXXXXX	Informs the operator to reinitialize the indicated subsystem (XXXXXXXXX).	Reinitialize indicated subsystem.
(S) SCADC VEL DEF	Data from a channel of SCADC did not pass parity check and will not be used for dead reckoning. Occurs at high slip angles or unusual attitudes. Program updates unless both channels are defective.	Reinitialization may be necessary. Check SCADC in CDNU System Status page.
(K) SCALE EXCD	Informs the operator that the track exceeds the distance that can be reported.	None.
(K) SCALE LIMIT	The aircraft symbol will be off scale if the pilot display is recentered at the hooked point, or the display scale is at the upper or lower limit.	Increase/decrease scale to remove alert.
(K) SECRET LOCKED	The function selected is not available because Secret Lock is in the locked state.	Enter Secret Code.

Figure 9-1. Description of Alerts (Sheet 22)

ALERT	MEANING OF ALERT	ACTION/IMPACT
(S) SEL GPDC ALT MODE	System altitude mode alerts the operator to switch to the GPDC altitude mode when a weapon FTP is entered in the system.	GPDC altitude mode maintains more control over altitude source switching during WFTP capture gates.
(F) SELECT CMPTR STRG	Informs the pilot and COTAC that a fly-to-point has been designated and the CMPTR must be selected on the AFCS selector panel.	Select CMPTR on the AFCS panel.
(A) SELECTION LOAD	The selection load program is in progress.	None.
(K) SELECTION UNAVAIL	Informs the operator that the selection made is unavailable.	Operator makes another selection.
ZZZZ SHORT BC ACTIVE	SHORT BC detected, momentarily until data is transferred.	No further action required.
(F) SONB MAX 250 KT-10K	Informs the pilot of speed and altitude restrictions for the launch of sonobuoys.	The alert is cleared by deactivation of the function or release of the sonobuoy.
(F) SONB MAX 250 FT-20K	Informs the pilot of speed and altitude restriction for the launch of DICASS sonobuoys.	The alert is cleared by deactivation of the function or release of the sonobuoy.
(F) SONB MAX 250 FT-20K	Informs the pilot of speed and altitude restriction for the launch of DIFAR sonobuoys.	The alert is cleared by deactivation of the function or release of the sonobuoy.
(S) ZZZZ SPCL REMOTE	Special intelligence data have been received by data link.	Locate special remote on the tactical plot.
(S) ZZZZ SPL TRK XXXX	Notifies operator that the applicable multifix previously designated as merged has split from the contact.	None.
(S) ZZZ SRCH CONT DEF	A defect in the SESCOS has been detected.	Reinitialization may be necessary.
(F) SRCH PWR OFF	Informs the requesting station that the pilot has not turned on the search power. The pilot is presented with the alert TURN ON SRCH PWR.	The pilot selects search power to ON.
(S) ZZZZ STA X FAIL	Wing station failure; indicates select station discrete was not received.	Respond by deselecting wing station.
(5) STORE RLS – CHECK SPD – ALT	Informs the pilot of speed and altitude restrictions for the launch of stores.	The alert is cleared by deactivation of the function or the release of a store.

Figure 9-1. Description of Alerts (Sheet 23)

ALERT	MEANING OF ALERT	ACTION/IMPACT
(S) ZZZZ SUMRY FAIL	ASW Summary has failed.	Try again.
(S) ZZZZ SUMRY GOOD	ASW Summary has satisfactorily completed.	None.
(K) SUMRY IN PROGRESS	ASW Summary is still in progress when attempt is made to deactivate function.	ASW SUMRY function cannot be deactivated until function is completed.
(K) SYMBOL CLEARED7	The symbol associated with the selected track number has been cleared from the display.	Redisplay through the REDSPL matrix or by activating INHIBT REMOTE (if active).
(E) X SYS YYYY LOAD	A portion of the Executive Program processing tables are overloaded. YYYY = MED (Medium scheduler queue overload), HIGH (Heavy scheduler queue overload), ALOC (A location queue overload) IO (Input/Output queue overload), or SAVR (Save Registers table overload).	Wait 30 seconds (do not press any switches). Expect program auto-reinitialization. If an auto-reinit does not occur, perform a SYSTEM REINIT.
(S) ZZZZ SYS ALT INVLD	System altitude mode, the altitude data received by the GPDC navigation subprogram are determined to be invalid.	Switch system altitude mode source using EFIS panel ALT switch. If still invalid, Switch to the GPDC altitude mode in NAV parameters Tableau. If still invalid, switch GPDC altitude mode source in NAV parameters Tableau.
(S) ZZZZ SYS VEL DEF	Velocity data received by GPDC from the NIU are determined to be invalid. These velocity data are not used by GPDC dead reckoning system.	Check CDNU System Status page. Attempt to establish stable NAV Select Mode.
(L) SYSTEM NOT AVAILABLE	The selected system is not available.	Reselect correct system.
(K) TABLEAU NOT DSPL	Operator failed to display the appropriate tableau before activating a function.	Display appropriate tableau.
(S) ZZZZ TACAN DEF	The TACAN is reported No-Go to the GPDC navigation subprogram.	Check TACAN status in CDNU System Status page. Check TACAN power status (Ref: S-3B CAINS II In-Flight Procedures Guide).

Figure 9-1. Description of Alerts (Sheet 24)

ALERT	MEANING OF ALERT	ACTION/IMPACT
(1) TACAN FIX – NO GEO CORR	The navigation source selected is EGPS, CAINS/GPS, EGPS, or GPS.	No correction is made, but an estimate of the TACAN station displayed as a fix.
(K) TASK NOT ASSIGNED	An available switch is pressed that has no associated function.	None.
(S) TILT LIMIT	Notifies the operator that the last antenna tilt command placed the antenna to the antenna tilt limit.	None.
(F) TIMEOUT XXXX	The applicable multi-fix track has not been updated for 30 minutes.	Alert will be cleared after 10 seconds.
(S) ZZZZ TIMEOUT XXXX	Notifies the operator that the applicable multi-fix track has not been updated for 30 minutes.	Delete track if of no interest; otherwise reorient the aircraft.
(2) ZZZZ TN ASSOC XXXX XXXX	Remote association received for specified tracks.	Information only — no further action.
(1) TN INVALID	Link TN entry does not conform to numbering scheme.	Reenter valid number.
(1) TN NOT HELD	Selected TN is not held for call up.	TN CALL not performed.
(1) TN UNAVAILABLE	No TN is available to transmit.	No message is sent.
(1) TN XXXX EMERGENCY	Hooked item is an emergency track.	No Drop Track permitted on Emergency — terminate emergency first.
(2) ZZZZ TN XXXX EMERG TERM	Emergency track transmit is terminated.	Limit of two Emergency Special Points.
(2) ZZZZ TN XXXX FORCE TERM	Remote terminate Force Tell received.	Track may now be filtered (removed from data base automatically).
(2) ZZZZ TN XXXX PURGED	Real time Remote TN not received for 40 seconds.	TN removed from database automatically.
(S) ZZZZ TRAY-X DEF (L) TRAY-X DEF	TACCO or SENSO INCOS has failed. X = T (TACCO), S (SENSO).	Attempt to reinitialize. Time will not appear when alert is displayed during opload initialization.
(S) ZZZZ TRK ALRT YYYY	An emergency exists on a data link symbol. YYYY = data link track number.	None.

Figure 9-1. Description of Alerts (Sheet 25)

ALERT	MEANING OF ALERT	ACTION/IMPACT
(S) ZZZZ TRK ASSN YYYY	A track association has been initiated, YYYY = one of the link track numbers that was associated.	None.
(K) TRK EXCD	Assemble Report has been attempted on a symbol that is too far from the aircraft symbol.	Symbol will not be transmitted.
(S) ZZZZ TRK EXCD YYYY	A track being transmitted on Link 11 is now too far from the aircraft symbol to be reported. YYYY = link track number.	The track will be dropped from the net.
(S) ZZZZ TRK PRGD YYYY	A remote track or participating unit/ reporting unit has been purged due to low track quality. YYYY = link track number or PU/RU address.	None.
(A) TURN OFF HACLC PWR	Instructs the TACCO to turn off the HACLC power.	Turn off HACLC power. Alert is cleared when switch is activated.
(F) TURN OFF MSTR ARM	Alerts the pilot that the MASTER ARM switch must be turned off.	Turn off MASTER ARM. Alert is cleared when switch is activated.
(F) TURN ON MSTR ARM	Alerts the pilot that the MASTER ARM switch must be turned on. The requesting station is presented with the alert MSTR ARM OFF.	Turn on MASTER ARM. Alert is cleared when the switch is activated.
(F) TURN ON SRCH PWR	Alerts the pilot that the SRCH PWR switch must be turned on. The requesting station is presented with the alert SRCH PWR OFF.	Turn on SRCH PWR. Alert is cleared when the switch is activated.
(2) ZZZZ UNEXPTD DSCRT	Unexpected discrete received from HACLCS.	Reinitialization may be necessary.
(F) WPN-CHECK SPD-ALT	Alerts the pilot to check airspeed and altitude restrictions prior to releasing a weapon.	Alert is cleared by deactivation of the function or release of the selected weapon.

Figure 9-1. Description of Alerts (Sheet 26)

BOMB DOOR DEF	**RAAWS DEF**	**NO WIND UPDATE**
NO DROP STA X	**NIU CH-1 DEF**	**MSL AWY STA X**
FLIR EX-R DEF	**NIU CH-2 DEF**	**SRCH CONT DEF**
ORBIT LIMIT	**ARM CONT DEF**	**SLC NO RLS XX**
ESM THREAT	**COMM DEF**	
SCADC DEF	**PNL-P DEF**	

Figure 9-2. Pilot Station System Alerts

PART IX

Tableaus

Chapter 10 — Tableaus

CHAPTER 10

Tableaus

10.1 INTRODUCTION

Tableaus consist of pages of information in tabular form and are displayed at the COTAC, TACCO, and SENSO stations. Tableaus present portions of the GPDC data base for operator information and updating. The tableaus display equipment status, weapon inventory, current operating parameters, preflight information, and data link parameters. They also provide a means for the operator to enter and store information such as contact classification, fix, and track data. No tableaus are automatically data extracted.

The tableau display format consists of 18 character spaces and 30 lines. The first two character spaces of any line always contain the line number. Line numbers do not appear below the last line containing data.

Tableau lines modifiable by the operator are designated on the following pages by an M placed outside the tableau area. The M does not appear on the MPD.

The advance (ADV) switch is used to proceed to the next tableau page, or half page, until all pages have been displayed, then the first page is redisplayed. The COTAC MPD displays only half a page at a time. The top half of the page contains lines 1 through 14 and the bottom half of the page contains lines 15 through 30.

The method of displaying each tableau, its purpose, and a chart listing the line number, designation, description, and remarks follows each tableau.

Figure 10-1 shows a complete list of all tableaus. Figures 10-2 through 10-34 show examples of the unclassified tableaus.

† AIL INHIBITS
† AIL SUMMARY
ANTENNA PARAMETERS
CC EXPANDED STATUS
CLASSIFICATION AIDS
COMM-CONFIGURATION (COMM CONFIG)
CONTACT AMPLIFY
DMTU EXPANDED SUBSYSTEM STATUS
† ESM AMPLIFY (AMBIGUITIES)
ESM EXPANDED SUBSYSTEM STATUS
† ESM LIBRARY DETAIL (ESM LBRY)
† ESM LIBRARY SUMMARY (ESM LBRY)
FIX AMPLIFY
FLIGHT SUMMARY (ALPHA-FLT SUM)
HARPOON EXPANDED SUBSYSTEM STATUS

Figure 10-1. Tableau List (Sheet 1 of 2)

HARPOON MISSILE EXPANDED SYSTEM STATUS
HARPOON
INDEX
INS EXPANDED SUBSYSTEM STATUS
KILL STORES
LINK 11 ORDER (LINK-ORDER)
LINK 11 PARAMETERS
LINK 11 PU LIST (PU)
NAV PARAMETERS
NAV PREFLIGHT (PREFLT)
NAV STATUS (NAV-STAT)
NIU 1 EXPANDED SUBSYSTEM STATUS
NIU 2 EXPANDED SUBSYSTEM STATUS
NOTE PAD
† OPERATOR LIBRARY DETAIL (OPER LBRY)
OPERATOR LIBRARY SUMMARY (OPER LBRY)
† PLATFORM SUMMARY
PROGRAM STATUS (STAT-PRGM)(AYK-10 only)
RADAR EXPANDED SUBSYSTEM STATUS
RADAR PARAMETERS
† RADAR TRACK CORRELATION
RIG
SEARCH STORES LOAD (SRCH)
† SIGNALS OF INTEREST (SOI)
SONOBUOY AMPLIFY
SYSTEM STATUS
TRACK AMPLIFY
TRACK MANAGEMENT
UHF CH-F ASSIGNMENTS (UHF CH-F)

† Listed in NAVAIR 01-S3AAB-1A (Supplemental NATOPS Flight Manual)

Figure 10-1. Tableau List (Sheet 2)

```
 1  ANTENNA PRMTRS

 2
 3  TILT                X   X   X
 4  AUTO TILT           X   X   X
 5  LOCK-STAB       X   X   X   X
 6  SCTR WIDTH      X   X   X   X
 7  SCTR SRCE
 8  TDS         X
 9  REL AC      X       N   N   N
10  REL NORTH   X       N   N   N
```

PURPOSE:

Provide the operator with a display of the current status of the antenna parameters.

LINE	DESIGNATION	DESCRIPTION	REMARKS
1	ANTENNA PRMTRS	Title line of Antenna Parameters Status Tableau.	
2	Blank		
3	TILT	Current antenna tilt angle in degrees.	XXX = +10 to –15
4	AUTO TILT	Current status of auto tilt subfunction.	XXX = OFF or ON
5	LOCK-STAB	Current status of antenna lock and stabilization.	XXXX = LOCK or STAB
6	SCTR WIDTH	Current search sector width in degrees.	XXXX = 0 – 120 and FULL
7	SCTR SRCE	Current status of sector source selection.	
8	TDS	TDS selected as sector source.	X = Selection status = 0 = Selected = = Not selected
9	REL AC	Bearing relative to aircraft selected as sector source.	NNN = 0 – 359
10	REL NORTH	Bearing relative to north selected as sector source.	

Figure 10-2. Antenna Parameters

CLASSIFICATION AIDS

1	CLASSAID	PRMTRS		
2	ENTRY	LNG	M	S
3	TN	WWWWXXXX	Y	Z
4				
5	CAA	BBBBXXXX	Y	Z
6	CAA	BBBBXXXX	Y	Z
8	CAA	BBBBXXXX	Y	Z
9	CAA	BBBBXXXX	Y	Z
10	CAA	BBBBXXXX	Y	Z
11	CAA	BBBBXXXX	Y	Z
12	CAA	BBBBXXXX	Y	Z
13	CAA	BBBBXXXX	Y	Z
14	CAA	BBBBXXXX	Y	Z
15	CAA	BBBBXXXX	Y	Z
16	CAA	BBBBXXXX	Y	Z
17	CAA	BBBBXXXX	Y	Z
18	CAA	BBBBXXXX	Y	Z
19	CAA	BBBBXXXX	Y	Z
20	CAA	BBBBXXXX	Y	Z
21	CAA	BBBBXXXX	Y	Z
22	CAA	BBBBXXXX	Y	Z
23	CAA	BBBBXXXX	Y	Z
24	CAA	BBBBXXXX	Y	Z
25	CAA	BBBBXXXX	Y	Z
26	CAA	BBBBXXXX	Y	Z
27	CAA	BBBBXXXX	Y	Z
28	CAA	BBBBXXXX	Y	Z
29	CAA	BBBBXXXX	Y	Z
30	CAA	BBBBXXXX	Y	Z

PURPOSE:

Allow the operator to identify Classification Aids library entries that match the parameters of the frozen ISAR image.

Figure 10-3. Classification Aids (Sheet 1 of 2)

LINE	DESIGNATION	DESCRIPTION	REMARKS
1	CLASSAID PRMTRS	Title line of Classification Aids Library Tableau.	
2	ENTRY, LNG, M, S	Column heading.	ENTRY = heading for frozen image track number and country and abbreviated name of the library entries. LNG = heading for length. M = heading for number of masts. S = heading for number of superstructures.
3	TN, WWWW		TN = abbreviation for track number. WWWW = track number of frozen image.
3–30	XXXX, Y, Z		XXXX = length of frozen image or library entry. Y = number of masts of frozen image or library entry. Z = number of superstructures of frozen image or library entry.
4	Blank.		
5–30	C, AA, BBBB		C = + to be located to designate operator-selected match. AA = two letter country designator. BBBB = four letter ship class name designator.

Note

The Classification Aids library shall be inserted into the program via the Preflight Data Insertion Program (PDIP).

Figure 10-3. Classification Aids (Sheet 2)

COMM CONFIGURATION (COMM-CONFIG)

```
 1  UHF 1        XXXXXXXXXX
 2  CH-F         XX YYY.YYY
 3  CKT          XXXXXXXX
 4  GRD          XXX
 5  ANT          XXXXXX
 6  SQEL         XXX
 7
 8  UHF 2        XXXXXXXXXX
 9  CH-F         XX YYY.YYY
10  CKT          XXXXXXXX
11  GRD          XXX
12  ANT          XXXXXX
13  SQEL         XXX
14
15  HF           XXXXXXXXXX
16  FREQ         XX.XXXX
17  CKT          XXXXXXXX
18  MODE         XXXX
19  RATE         XXXX
20  SQEL         XXX
21  BLKR         XX
```

PURPOSE:

Inform the operator of the communications equipment configuration. The COMM Configuration (COMM-CONFIG) Tableau may be displayed through the INDEX function.

Figure 10-4. Comm Configuration (COMM-CONFIG) (Sheet 1 of 2)

LINE	DESIGNATION	DESCRIPTION	REMARKS
1	UHF1	UHF-1 radio	XXXXXXXXXX represents ON OPERATE, ON SILENCE, OFF, or FAULT = Defective.
2	CH-F	Channel-Frequency	XX represents the UHF channel (1 thru 22). YYYYYY indicates the frequency (225.000 thru 399.950 MHz).
3	CKT	Circuit	XXXXXXXX represents CLR VOX, SEC VOX, CLR DATA, SEC DATA, SONO CMD, AWCLS, or ADF.
4	GRD	Guard	XXX represents ON or OFF.
5	ANT	Antenna	XXXXXX represents TOP or BOTTOM.
6	SQEL	Squelch	XXX represents ON or OFF.
7	Blank		
8	UHF2	UHF-2 radio	See line 1, remarks.
9 thru 13			See lines 2 thru 6, remarks.
14	Blank		
15	HF	HF radio	See line 1, remarks.
16	FREQ	Frequency	XX.XXXX represents 2.0000 thru 29.9999 MHz.
17	CKT	Circuit	XXXXXXXX represents CLR VOX, SEC VOX, CLR DATA, or SEC DATA.
18	MODE	Mode	XXXX represents USB, LSB, BOTH, or AME.
19	RATE	Rate	XXXX represents FAST or SLOW.
20	SQEL	Squelch	See line 6, remarks.
21	BLKR	Noise blanker	XXX represents ON or OFF.

Figure 10-4. Comm Configuration (COMM-CONFIG) (Sheet 2)

CONTACT AMPLIFY

1	CNCT	XXX YYYZ
2	TN	XXXX
3	LNK	XXXX XXXXX
4	NAME	XXXXXXXXXX
5	LAT	X XX XX XXX
6	LON	X XXX XX XXX
7	TIME	XX XX XX
8	C-ID	XXXXXX
9	SENS	XXXXXXXXXX
10	L-R	XXX
11	RNG	XXXXX
12	BRG	XXX
13	SPD	XX
14	DPTH	XXXX
15	BLAT	XXX XX XXX
16	BLON	XXXX XX XXX
17	BBRG	XXX
18	BTIM	XX XX XX
19	RF1	XX
20	RF2	XX
21	RF3	XX
22	AF	X
23	DOPP	YXXX
24	ELAT	XX XX XXX
25	ELON	XXX XX XXX

PURPOSE:

Inform the operator of amplifying data concerning a contact. The Contact Amplify Tableau may be displayed through the AMPLFY function when a contact symbol (ESM bearing) has been hooked.

Figure 10-5. Contact Amplify (Sheet 1 of 3)

LINE	DESIGNATION	DESCRIPTION	REMARKS
1	CNCT	Contact number	XXX represents 1 thru 377 (octal). YYY represents emitter number if this contact is an ESM contact. Z represents E if this contact is an ESM contact. Remote ESM bearing lines are assigned contact number zero.
2	TN	Track number	XXXX represents SPEC = Contact derived from special intelligence source or Blank = Contact derived normally.
3	LNK	Data Link track number	XXXX represents 200 thru 7776 (octal). XXXXX = The first and second characters are entered with alpha or numeric, and the third, fourth, and fifth characters are entered as numeric only. Press “SHIFT” then press “ALPHA NUM” on keyset to enter alphanumeric characters.
4	NAME	Vessel name, side number, or type	Obtained from the Rig Tableau.
5	LAT	Latitude	X XX XX.XXX represents N 90 00.000 thru S 90 00.000.
6	LON	Longitude	X XXX XX.XXX represents E 180 00.000 thru W 180 00.000.
7	TIME	Time of contact	XXXX represents 0000 thru 2359.
8	C-ID	Category identification	XXXXXX represents the following: F AIR = Friendly air F SURF = Friendly surface F SUB = Friendly sub H AIR = Hostile air H SUR = Hostile surface H SUB = Hostile sub U AIR = Unknown air U SUB = Unknown sub Blank = No CAT ID.
9	SENS	Reporting sensor	XXXXX represents ESM.
10	L-R	Local remote	XXX represents LOC = Local, or REM = Remote.
11	RNG	Range	XXXXX represents 1 thru 99999 yards.
12	BRG	Bearing	XXX represents 000 thru 359°.
13	SPD	Speed	XX represents speed 0 to 99 knots.
14	DPTH	Depth	XXXX represents depth 0 to 9999 feet.
15	BLAT	Baseline latitude (ESM)	X XX XX.XXX represents N 90 00.000 thru S 90 00.000.

Figure 10-5. Contact Amplify (Sheet 2)

LINE	DESIGNATION	DESCRIPTION	REMARKS
16	BLON	Baseline longitude (ESM)	X XXX XX.XXX represents E 180 00.000 thru W 180 00.000.
17	BBRG	Baseline bearing	XXX represents 000 thru 359°.
18	BTIM	Baseline initial time of contact	XXXX represents 0000 thru 2359.
19	RF1	RF channel of first sonobuoy to hold this contact	Blank.
20	RF2	RF channel of second sonobuoy to hold this contact	Blank.
21	RF3	RF channel of third sonobuoy to hold this contact	Blank.
22	AF	Sonobuoy AF designation	Blank.
23	DOPP	Doppler	XX represents 0 thru 99 knots or 0 thru 99° per 40 seconds.

Figure 10-5. Contact Amplify (Sheet 3)

DMTU EXPANDED SUBSYSTEM
STATUS

```
1                D      D
2                E      I
3                F      S
4
5  DMTU          X      Y
6  READ          X
7  WRITE         X
```

PURPOSE:

Display the status of the DMU.

LINE	DESIGNATION	DESCRIPTION	REMARKS
1, 2, 3	DEF DIS	Defect and disable title.	None
4	Blank		
5	DMTU X Y	DMTU system status for defect and disable.	X – 1 = Defect 0 = GO Y – 1 = Defect 0 = GO
6	READ	Indicates READ status of DMU.	X – 1 = Defect 0 = GO Y – 1 = Defect 0 = GO
7	WRITE	Indicates WRITE status of DMU.	X – 1 = Defect 0 = GO Y – 1 = Defect 0 = GO

Figure 10-6. DMU Expanded Subsystem Status

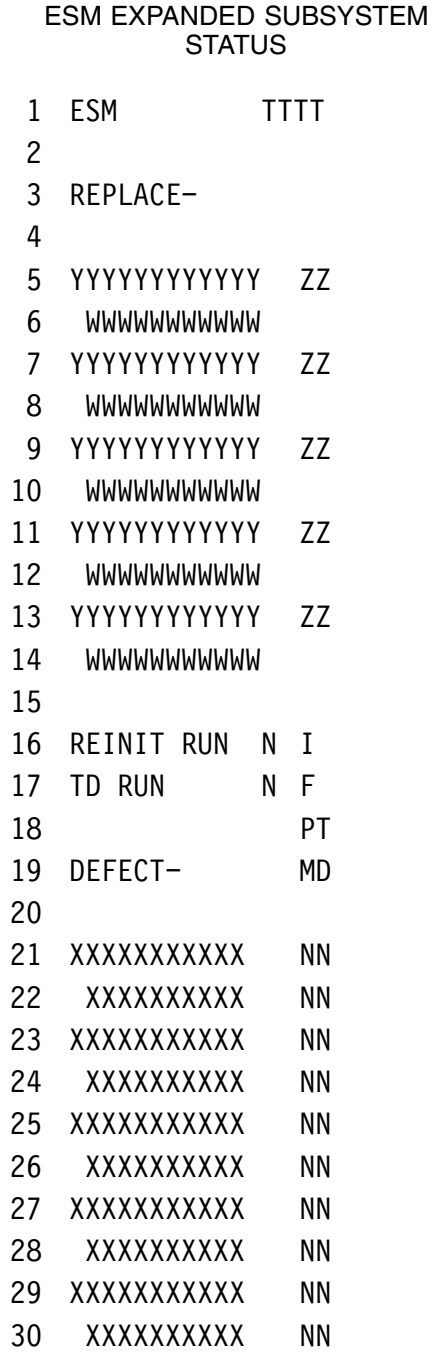

PURPOSE:

Allow the operator to observe the status of the ESM subsystem.

Figure 10-7. ESM Expanded Subsystem Status (Sheet 1 of 2)

LINE	DESIGNATION	DESCRIPTION	REMARKS
1	ESM TTTT	Time.	Title line of ESM Expanded Subsystem Expanded Status Tableau. TTTT represents system time.
2	Blank		
3	REPLACE —		
4	Blank		
5, 7, 9, 11, 13	YYYYYYYYYYYY ZZ	Component identifier.	Y represents the descriptor/Locator Z represents the line number of the first related defect.
6, 8, 10, 12, 14	WWWWWWWWWWW	WRA identifier.	W represents the Weapons Replacement Assembly (WRA) designator.
15	Blank		
16	REINIT RUN N	Reinitialization run status.	N represents 1–9 or blank.
16–19	IFPM	Identifies source title of defect message.	None.
17	TD RUN N	Diagnostics run status.	N represents 1–9 or blank.
18–19	TD	Identifies source title of defect message.	None.
19	DEFECT —		
20	Blank		
21 thru 30	XXXXXXXXXX NN	Defect message.	X represents the defect message. NN represents 1–9 line count.

Figure 10-7. ESM Expanded Subsystem Status (Sheet 2)

FIX AMPLIFY

```
 1  TN
 2  LOC    XXXX
 3  LNK    XXXX XXXXX
 4  NAME   XXXXXXXXXX
 5  LAT    X XX XX XXX
 6  LON    XXXX XX.XXX
 7  HDG
 8  SPD
 9  H-D    NO STATEMT
10  TIME   XX XX XX
11  C-ID   XXXXXX
12  L-R    XXX
13  ENGA   XXXXXXXXXX
14  CLAS   XXXXXXXXXX
15  AMPL   XXXXXXX
16  PRI    XXXXXXXXXX
17  TQ     XX
18  MGT    XXXXXXXXXX
19  SENS   XXXXXXXXXX
20  DI     XXXX
21  MD1    XX
22  MD2    XXXX
23  RR     XXX
24  SHIP
25  CLAS   XX YYYY
```

PURPOSE:

Inform the operator of amplifying data concerning a fix. The FIX AMPLIFY Tableau may be displayed through the AMPLIFY function when a fix symbol is hooked.

Figure 10-8. Fix Amplify (Sheet 1 of 4)

LINE	DESIGNATION	DESCRIPTION	REMARKS
1	TN	Track number	
2	LOC	Local track number	XXXX represents 200 through 7776 (Octal) or Blank = Remote track.
3	LNK	Data Link track number	XXXX represents 200 through 7776 (Octal) or Blank = Not on Data Link.
			XXXXX = The first and second characters are entered with alpha or numeric, and the third, fourth, and fifth characters are entered as numeric only.
4	NAME	Vessel name, side number, or type	Obtained from the RIG Tableau.
		PDIP Fix name	Obtained from preflight insert data table.
5	LAT	Latitude (Geographic)	X XX XX.XXX represents N 90 00.000 thru S 90 00.000.
6	LON	Longitude (Geographic)	XXXX XX.XXX represents E 180 00.000 thru W 180 00.000.
7	HDG	Heading	This line blank.
8	SPD	Speed	This line blank.
9	H-D	Height-Depth	
	NO STATEMT	No statement	
10	TIME	Time	XX XX XX represents 00 00 00 thru 23 59 59.
11	C-ID	Category identification	XXXXXX represents the following: F AIR = Friendly air F SURF = Friendly surface F SUB = Friendly sub H AIR = Hostile air H SURF = Hostile surface H SUB = Hostile sub U AIR = Unknown air U SURF = Unknown surface U SUB = Unknown sub.
12	L-R	Local-Remote	XXX represents LOC = Local, or REM = Remote.
13	ENGA	Engagement status	XXXXXXXXX represents ENGAGED, NOT ENGAGED, ASSIGNED, or KILLED.
14	CLAS	Classification	XXXXXXXXX represents the following: NO STATEMT = No statement POSSIBLE = Possible sub PROBABLE = Probable sub NON SUB BLANK = Surface or air.

Figure 10-8. Fix Amplify (Sheet 2)

LINE	DESIGNATION	DESCRIPTION	REMARKS
15	AMPL	Amplify classification	XXXXXXXXXX represents the following: UNKNOWN NON-NUC NUCLEAR BLANK = Non sub.
16	PRI	Primary Identity	XXXXXXXXXX represents the following: CONFIRMED = Confirmed for ID of friend or hostile AUXILIARY = Auxiliary for ID of friend SPCL MSSN = Special mission for ID of friend LINE = Line for ID of friend AMPHIBIOUS = Amphibious for ID of friend EVAL UNK = Evaluated unknown for ID of unknown ASSUMED FR = Assumed friendly for ID of unknown ASSUMED H = Assumed hostile for ID of unknown BLANK = Subsurface.
17	TQ	Track quality	XXX represents the following: RT = Local subsurface fix O = Local surface fix BLANK = Local air fix.
18	MGT	Data Link management	XXXXXXXXXX represents the following: ASSOC = Link track is associated with another line track EMERG = Emergency condition FORCE TELL = Force commander wants all units to receive this link track BLANK = None of the above.
19	SENS	Sensor for all local fixes	XXXXXXXXXX represents the following: FLIR DESIG = TACCO designated VISUAL = Visual RADAR ESM PDIP = Pre-Flight Data Insertion Program REM = Remote bearing contacts NO STATEMNT = Different sensor types.
20	DI	Discrete identifier	XXXX represents 0000 through 7777(octal).
21	MD1	Mode 1	XX represents 00 through 73.

Figure 10-8. Fix Amplify (Sheet 3)

LINE	DESIGNATION	DESCRIPTION	REMARKS
22	MD2	Mode 2	XXXX represents 0000 through 7777.
23	RR	Reporting responsibility	XXXX represents 000 076 (PU) or 100 through 176 (RU) address of unit reporting this symbol.
24	SHIP		XX = Two letter country designation.
25	CLAS XX YYYY		YYYY = Four-letter ship class name. Lines 24 and 25 only modifiable through radar class aids function.

Figure 10-8. Fix Amplify (Sheet 4)

```
FLIGHT SUMMARY (ALPHA-FLT SUM)
  1  MODEX          XXXX      M
  2
  3  MD1            XX        M
  4  MD2            XXXX      M
  5  B-NO           XXXXXX    M
  6  CREW           XX        M
  7  COOP           XXXXXXXX  M
  8  TIME
  9  T-O XX XX XX             M
 10  ONS XX XX XX             M
 11  OFF XX XX XX             M
 12  L-P XX XX XX             M
 13  TOS XX XX XX             M
 14  TOT XX XX XX             M
 15  RLD
 16   ACNO          XXX       M
 17   SQDN          XXXXXX    M
 18
 19  RLG
 20   ACNO          XXX       M
 21   SQDN          XXXXXX    M
 22
 23  AREA
 24   CLG           XXXXX     M
 25   VIS           XXX       M
 26   SEA           X         M
        Page 1 of 5
```

PURPOSE:

Inform the operator of a summary of the flight. The Flight Summary (ALPHA-FLT SUM) Tableau may be displayed through the INDEX function.

Figure 10-9. Flight Summary (ALPHA-FLT SUM) (Sheet 1 of 8)

LINE	DESIGNATION	DESCRIPTION	REMARKS
1	MODEX	Own aircraft number	XXXX represents 1 thru 9999.
2			
3	MD1	Mode 1	XX represents 00 through 73.
4	MD2	Mode 2	XXXX represents 0000 through 7777.
5	B-NO	Bureau number	XXXXXX represents 000001 through 999999.
6	CREW	Crew number	XX represents 1 through 99.
7	COOP	Cooperative unit type	XXXXXXXX represents a code assigned by the ASW Operations Center (ASWOC) or CV ASW Module (CV ASWM).
8	TIME		
9	T-O	Take off time	XX XX XX represents 00 00 00 thru 23 59 59.
10	ONS	Time aircraft went on station	See line 9, remarks.
11	OFF	Time aircraft went off station	See line 9, remarks.
12	L-P	Landing off station pattern time	See line 9, remarks.
13	TOS	Total time on station	See line 9, remarks.
14	TOT	Total time of flight	See line 9, remarks.
15	RLD	The relieved aircraft	
16	ACNO	Aircraft number	XXX represents alphas.
17	SQDN	Squadron	XXXXXX represents alphas.
18	Blank		
19	RLG	The relieving aircraft	
20	ACNO	Aircraft number	See line 16.
21	SQDN	Squadron	See line 17.
22	Blank		
23	AREA	Area	
24	CLG	Ceiling	XXXXXX represents 0 thru 99999 feet.
25	VIS	Visibility	XXX represents 0 thru 999 miles.
26	SEA	Sea state	X represents 0 thru 6.

Figure 10-9. Flight Summary (ALPHA-FLT SUM) (Sheet 2)

FLIGHT SUMMARY (ALPHA-FLT SUM)

```
 1  LAT     X XX XX.XXX
 2  LON     XXXX XX.XXX
 3
 4  LAT     X XX XX.XXX
 5  LON     XXXX XX.XXX
 6
 7  LAT     X XX XX.XXX
 8  LON     XXXX XX.XXX
 9
10  LAT     X XX XX.XXX
11  LON     XXXX XX.XXX
12
13  LAT     X XX XX.XXX
14  LON     XXXX XX.XXX
15
16  LAT     X XX XX.XXX
17  LON     XXXX XX.XXX
          Page 2 of 5
```

LINE	DESIGNATION	DESCRIPTION	REMARKS
1, 4, 7, 10, 13, 16	LAT	Latitude	X XX XX.XXX represents N 90 00.000 thru S 90 00.000.
2, 5, 8, 11, 14, 17	LON	Longitude	XXXX XX.XXX represents E 180 00.000 thru W 180 00.000.
3, 6, 9, 12, 15	Blank		

Note

Lines 1 thru 17 represents latitude and longitude for 6 total areas (see lines 1 and 2, remarks).

Figure 10-9. Flight Summary (ALPHA-FLT SUM) (Sheet 3)

FLIGHT SUMMARY (ALPHA-FLT SUM)

```
 1  AREA    XXXXXXX
 2
 3  LAT     X XX XX.XXX
 4  LON     XXXX XX.XXX
 5
 6  LAT     X XX XX.XXX
 7  LON     XXXX XX.XXX
 8
 9  LAT     X XX XX.XXX
10  LON     XXXX XX.XXX
11
12  LAT     X XX XX.XXX
13  LON     XXXX XX.XXX
14
15  LAT     X XX XX.XXX
16  LON     XXXX XX.XXX
          Page 3 of 5
```

LINE	DESIGNATION	DESCRIPTION	REMARKS
1	AREA		XXXXXXX represents a specific area.
2, 5, 8, 11, 14	Blank		
3, 6, 9, 12, 15	LAT	Latitude	X XX XX.XXX represents N 90 00.000 thru S 90 00.000.
4, 7, 10, 13, 16	LON	Longitude	XXXX XX.XXX represents E 180 00.000 thru W 180 00.000.
	Note		
	Lines 3 thru 16 represent latitude and longitude for 5 specific areas (see lines 3 and 4, remarks).		

Figure 10-9. Flight Summary (ALPHA-FLT SUM) (Sheet 4)

FLIGHT SUMMARY (ALPHA-FLT SUM)

```
 1  TACAN
 2  HULL      CH        ID
 3  XXXX      YY        ZZ
 4  XXXX      YY        ZZ
 5  XXXX      YY        ZZ
 6  XXXX      YY        ZZ
 7  XXXX      YY        ZZ
 8  XXXX      YY        ZZ
 9  XXXX      YY        ZZ
10  XXXX      YY        ZZ
11  XXXX      YY        ZZ
12  XXXX      YY        ZZ
13
14
15  OWN FORCE
16  TYP       HULL      CALL
18  XXX       YYYY      ZZZZZZ
19  XXX       YYYY      ZZZZZZ
20  XXX       YYYY      ZZZZZZ
21  XXX       YYYY      ZZZZZZ
22  XXX       YYYY      ZZZZZZ
23  XXX       YYYY      ZZZZZZ
24  XXX       YYYY      ZZZZZZ
25  XXX       YYYY      ZZZZZZ
26  XXX       YYYY      ZZZZZZ
27  XXX       YYYY      ZZZZZZ
28  XXX       YYYY      ZZZZZZ
29  XXX       YYYY      ZZZZZZ
30  XXX       YYYY      ZZZZZZ
          Page 4 of 5
```

Figure 10-9. Flight Summary (ALPHA-FLT SUM) (Sheet 5)

LINE	DESIGNATION	DESCRIPTION	REMARKS
1	TACAN	Tactical air navigation	
2	HULL	Vessel hull number	
	CH	TACAN channel number	
	ID	TACAN station identity	
3 thru 12	XXXX		XXXX represents 1 thru 9999.
	YY		YY represents 1 thru 99.
	ZZ		ZZ represents USN alpha identification.
13, 14	Blank		
15	OWN FORCE		
16	TYP	Vessel type	
	HULL	Vessel hull number	
	CALL	Vessel call designation	
17 thru 30	XXX		XXX represents type vessel.
	YYYY		YYYY represents 1 thru 9999.
	ZZZZZZ		ZZZZZZ represents USN alpha identification.

Figure 10-9. Flight Summary (ALPHA-FLT SUM) (Sheet 6)

FLIGHT SUMMARY (ALPHA-FLT SUM)

```
 1  CREW
 2  P  XXXXXXXXXXXX     M
 3    XXXXXXXXX YYYY    M
 4  C  XXXXXXXXXXXX     M
 5    XXXXXXXXX YYYY    M
 6  T  XXXXXXXXXXXX     M
 7    XXXXXXXXX YYYY    M
 8  S  XXXXXXXXXXXX     M
 9    XXXXXXXXX YYYY    M
10  QUAL  XXXXXXXXXX    M
11
12
13
14
15  MISSION
16  CODE  XXXXXXXXXX    M
17  QUAL  XXXXXXXXXX    M
18  OBJ   XXXXXXXXXX    M
19  COOP  XXXXXXXXXX    M
          Page 5 of 5
```

Figure 10-9. Flight Summary (ALPHA-FLT SUM) (Sheet 7)

LINE	DESIGNATION	DESCRIPTION	REMARKS
1	CREW		
2	P	Pilot	XXXXXXXXXXXX represents pilot rank, rate, and name.
3			XXXXXXXXX represents pilot social security number. YYYY represents pilot qualification.
4	C	COTAC	COTAC rank, rate, and name.
5			COTAC social security number and qualification.
6	T	TACCO	TACCO rank, rate, and name.
7			TACCO social security number and qualification.
8	S	SENSO	SENSO rank, rate, and name.
9			SENSO social security number and qualification.
10	QUAL	Qualification	XXXXXXXXX represents crew qualification.
11 thru 14	Blank		
15	MISSION		
16	CODE	Mission code	XXXXXXXXX represents a code assigned by the ASW Operations Center (ASWOC) or CV ASW Module (CV ASWM).
17	QUAL	Code Qualifier	See line 16, remarks.
18	OBJ	Mission objective	See line 16, remarks.
19	COOP	Cooperative unit type	See line 16, remarks.

Figure 10-9. Flight Summary (ALPHA-FLT SUM) (Sheet 8)

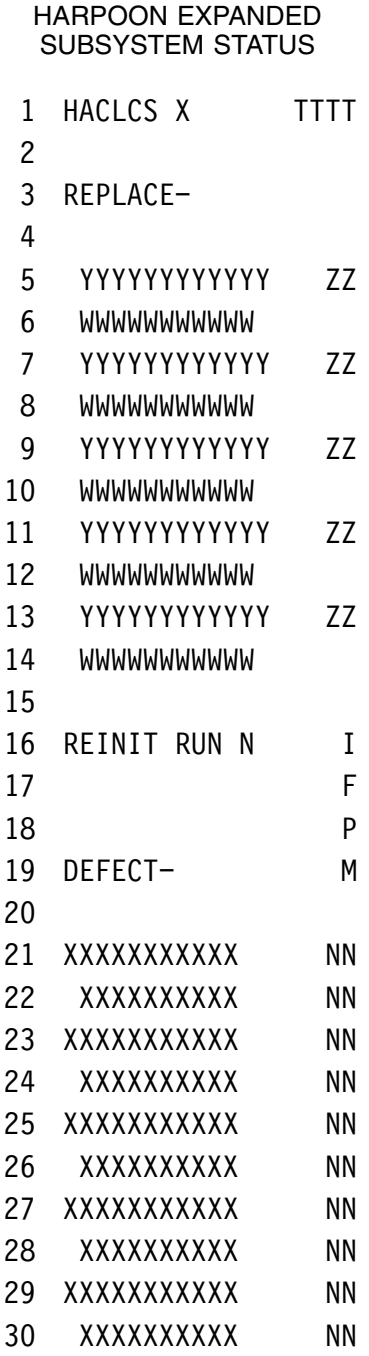

PURPOSE:

Allow the operator to observe the operational status of the Harpoon subsystem displayed via the SYSTEM STATUS option select switch.

Figure 10-10. Harpoon Expanded Subsystem Status (Sheet 1 of 2)

LINE	DESIGNATION	DESCRIPTION	REMARKS
1	X TTTT	Displays the tableau title and system time.	X = Wing Station 5 or 6. TTTT = System time.
2	Blank		
3	REPLACE–	Display title to replace data area.	None.
4	Blank		
5, 7, 9, 11, 13	YYYYYYYYYYYY ZZ	Identifies descriptor/locator for defect and line number for defect.	Y = Descriptor/Locator. Z = Line number.
6, 8, 10, 12, 14	WWWWWWWWWWW	Identifies WRA designation for fault.	WRA = WRA designator.
15	Blank		
16	REINIT RUN N	Displays reinitialization run status.	N = 1 – 9 or Blank.
16–19	IFPM	Identifies source title of defect message.	None.
20	Blank		
21–30	XXXXXXXXXXX NN	Displays defect message associated with fault designator.	X = Defect message. NN = 1 – 9 Line count.

Figure 10-10. Harpoon Expanded Subsystem Status (Sheet 2)

HARPOON MISSILE

```
 1  HRPN MSL      TTTT

 3  STATION 5     STAT
 4
 5   MGU  COMM    YY YY
 6   MGU  DCA     YY YY
 7   MGU  GYRO    YY YY
 8   MGU  SKR     YY YY
 9   MGU  ALT     YY YY
10   MGU  ARA     YY YY
11
12
13
14
15  STATION 6     STAT
16
17   MGU  COMM    YY YY
18   MGU  DCA     YY YY
19   MGU  GYRO    YY YY
20   MGU  SKR     YY YY
21   MGU  ALT     YY YY
22   MGU  ARA     YY YY
```

PURPOSE:

Display Harpoon missile targeting data.

Figure 10-11. Harpoon Missile Expanded System Status (Sheet 1 of 2)

LINE	DESIGNATION	DESCRIPTION	REMARKS
1	HRPN MSL TTTT	Harpoon Missile	TTTT = Time
2	Blank		
3	STATION 5 STAT	Station 5 identifier	
4	Blank		
5	MGU COMM	Missile Guidance Unit Communication status	YY YY = NO GO or GO
6	MGU DCA	Missile Guidance Unit Digital Computer Assembly status	YY YY = NO GO or GO
7	MGU GYRO	Missile Guidance Unit Gyro status	YY YY = NO GO or GO
8	MGU SKR	Missile Guidance Unit Seeker status	YY YY = NO GO or GO
9	MGU ALT	Missile Guidance Unit Altimeter status	YY YY = NO GO or GO
10	MGU ARA	Missile Guidance Unit Attitude Reference Assembly status	YY YY = NO GO or GO
11–14	Blank		
15	STATION 6 STAT	Station 6 identifier	
16	Blank		
17	MGU COMM	Missile Guidance Unit Digital Computer Assembly status	YY YY = NO GO or GO
18	MGU DCA	Missile Guidance Unit Digital Computer Assembly status	YY YY = NO GO or GO
19	MGU GYRO	Missile Guidance Unit Gyro status	YY YY = NO GO or GO
20	MGU SKR	Missile Guidance Unit Seeker status	YY YY = NO GO or GO
21	MGU ALT	Missile Guidance Unit Altimeter status	YY YY = NO GO or GO
22	MGU ARA	Missile Guidance Unit Attitude Reference Assembly status	YY YY = NO GO or GO

Figure 10-11. Harpoon Missile Expanded System Status (Sheet 2)

HARPOON

```
01  HARPOON
02  STA 5 HCV X
03  ETLP    XX XX XX
04  DLP     XXX BLP XXX
05  MODE    XXXXXXX
06  PRMTRS
07  TTGT    XX XX XX
08  LAT     Y XX XX.XXX
09  LONG    YXXX XX.XXX
10  RNG     XXX BRG XXX
11  PRI     XXXXXX
12  TERM    XXXXXX
13
14  ETOT    XX XX XX
15  DTOT    XX XX XX
16
17  STA 6 HCV X
18  ETLP XX XX XX
19  DLP XXX BLP XXX
20  MODE    XXXXXXX
21  PRMTRS
22  TTGT    XX XX XX
23  LAT     Y XX XX.XXX
24  LONG    YXXX XX.XXX
25  RNG     XXX BRG XXX
26  PRI     XXXXXX
27  TERM    XXXXXX
28
29  ETOT    XX XX XX
30  DTOT    XX XX XX
```

PURPOSE:

Allows the operator to view Harpoon targeting data.

Figure 10-12. Harpoon Tableau (Sheet 1 of 3)

LINE	DESIGNATION	DESCRIPTION	REMARKS
1	HARPOON	Harpoon Missile Tableau.	Displayed when missile loaded.
	SIM HARP	Harpoon Simulation Tableau.	Displayed when Harpoon Simulation active.
2/17	STA	Wing station 5 and 6 identifier.	X = 0, 1, 2, 3, 5, 6, or 7.
	HCV	Harpoon Configuration Value.	
3/18	ETLP	Wing station 5 and 6 Estimated Time to Launch Point.	Time from aircraft position to the nearest release availability position.
4/19	DLP	Wing station 5 and 6 Distance to Launch Point.	Distance from the aircraft to the nearest release position.
	BLP	Wing station 5 and 6 Bearing to Launch Point.	Bearing from the aircraft to the nearest release availability position.
5/20	MODE	Station 5 and 6 missile seeker search mode.	Indicates seeker search pattern. Y = 1 = RBL LRG 2 = RBL MED 3 = RBL SML 4 = BOL
6/21	PRMTRS	Target Parameters.	Targeting data.
7/22	TTGT	Wing station 5 and 6 Time to Target.	Time from the aircraft to the Aim point before release for a Range Bearing Launch. Missile flight time from the aircraft to the Aim point after release. Flight time remaining (before fuel exhaustion) from release for a Bearing Only Launch.
8/23	LAT	Latitude.	Latitude of the Aim point for a Range Bearing Launch, or Latitude of the Enable Point for a Bearing Only Launch.
9/24	LONG	Wing station 5 and 6 Longitude.	Longitude of Aim point for a Range Bearing Launch, or Longitude of the Enable Point for a Bearing Only Launch.
10/25	RNG	Wing station 5 and 6 range.	Range to Aim point for a Range Bearing Launch, or range to the Enable Point for a Bearing Only Launch.
	BRG	Wing station 5 and 6 bearing.	Bearing to the Aim point for a Range Bearing Launch, or bearing to the Enable Point for a Bearing Only Launch.

Figure 10-12. Harpoon Tableau (Sheet 2)

LINE	DESIGNATION	DESCRIPTION	REMARKS
11/26	PRI	Wing station 5 and 6 seeker search priority.	Requires HCV 3, 5, 6, or 7 and RBL LRG seeker search pattern. Initiates initial seeker search pattern. X = 1 = NORMAL 2 = FAR 3 = NEAR 4 = RIGHT 5 = LEFT
12/27	TERM	Wing station 5 and 6 terminal maneuver.	If HCV 5 selected, operator input either: X = 1 = POP-UP 2 = SKIM If HCV 0, 1, 2 selected, line will be blank.
14/29	ETOT	Wing station 5 and 6 estimated time-on-target.	If inside release envelope, estimated time-on-target (RBL) or time at enable point (BOL) if release switch is pressed now. Outside release envelope, assumes flight-path direct to release envelope followed by a maximum range release.
15/30	DTOT	Wing station 5 and 6 designated time-on-target.	Operator-entered designated time-on-target.

Figure 10-12. Harpoon Tableau (Sheet 3)

INDEX

```
 1  STAT-PRGM
 2
 3
 4  NAV-STAT
 5   PRMTRS
 6   PREFLT
 7  COMM-CONFIG
 8   UHF CH-F
 9  LINK-ORDER
10   PU
11  TRACK MANAGE
12  ESM-AIL
13  STRS-KILL
14  SRCH
15
16  ALPHA-FLT SUM
17   RIG
18   NOTE PAD
19
20
21  RADAR TRK CORR
22  HRPN MSL
```

PURPOSE:

Inform the operator of all the tableaus available by means of the SELECT LINE option. The Index Tableau may be displayed through the INDEX function. The tableau is also displayed at the TACCO station following a program load.

Figure 10-13. Index (Sheet 1 of 2)

LINE	DESIGNATION	DESCRIPTION	REMARKS
1	STAT-PRGM (AYK-10)	Program Status.	See Program Status Tableau. (AYK-10 only)
2			
3			
4	NAV-STAT	Navigation Status.	See NAV Status Tableau.
5	PRMTRS	Parameters.	See NAV Parameters Tableau.
6	PREFLT	Preflight.	See NAV Preflight Tableau.
7	COMM-CONFIG	Communications Configuration.	See COMM-CONFIG Tableau.
8	UHF CH-F	UHF channel.	See UHF CH-F ASGMT Tableau.
9	LINK-ORDER	Link Order.	See Link 11 Order Tableau.
10	PU	Participating Unit.	See Link 11 PU List Tableau.
11	TRACK-MANAGE	Track Management.	See Track Management Tableau.
12	ESM-AIL	Electronic Support Measures Active Interest List.	See ESM AIL Summary Tableau. (NAVAIR 01-S3AAB-1A, NATOPS Secret Supplement.)
13	STRS-KILL	Kill Stores.	See Kill Stores (STRS KILL) Tableau.
14	SRCH	Search Stores.	See SRCH STRS LOAD (SRCH) Tableau.
15			
16	ALPHA-FLT SUM	Flight summary.	See Flight Summary (ALPHA-FLT SUM) Tableau.
17	RIG	Rigging.	See Rig Tableau.
18	NOTE PAD	Note Pad.	See Note Pad Tableau.
19			
20			
21	RADAR TRK CORR	Radar Track Correlation.	See Radar TRK CORR Tableau.
22	HRPN MSL	Harpoon Missile.	See Harpoon Missile Tableau.
23			
24			

Figure 10-13. Index (Sheet 2)

KILL STORES (STRS-KILL)

```
1   ST       STORE     QT  DE
2   B1       XXXXXX     Y  ZZ
3   B2       XXXXXX     Y  ZZ
4   B3       XXXXXX     Y  ZZ
5   B4       XXXXXX     Y  ZZ
6   W5       XXXXXX    YY  ZZ
7   W6       XXXXXX    YY  ZZ
8
9   TGT ELV  XXXXXFT
```

PURPOSE:

The Kill Stores (STRS-KILL) Tableau may be displayed through the INDEX function to inform the operator of the weapon types and quantity available. The quantity column of the Kill Stores Tableau is operator modifiable via select line. The store MOD is modifiable via select line only for torpedo types, i.e., T46M2 or T46M5. Additional store type modifications may be accomplished by ACP thumbwheel (AUTO mode) followed by an ARM/ORD reinitialization. Subsequent quantity modification may be required. Target elevation is operator modifiable via Select Line, Lines 6 and 7 are operator modifiable from B82 to B83 or B84 (B82 set on ACP) and from TER 82 to TER 83 (TER 82 set on ACP).

LINE	DESIGNATION	DESCRIPTION	REMARKS
1	ST STORE QT DE	Weapon station Weapon type Quantity Defect or Error	None.
2 thru 5	B1 thru B4	Bomb bay stations B1 thru B4	XXXXXX represents B76, T46, D36, B82, or blank indicating no stores present.
	Y		Y represents quantity 0 or 1.
	ZZ	Defect or error	Z represents D if the GPDC inventory differs from the station inventory, or E if GPDC-ACP communications has failed, or BLANK = OK.

Figure 10-14. Kill Stores (STRS-KILL) (Sheet 1 of 2)

LINE	DESIGNATION	DESCRIPTION	REMARKS
6, 7	W5/W6	Wing stations W5 and W6	XXXXXX represents the following: PBR76 = PMBR-76 PBR106 = PMBR-106 R82 = MK82 = MK82 (RET) R82TER = TERMK82 (RET) B82TER = TERMK82 (LD) B83TER = TERMK83 (LD) R36TER = TERMK36 (RET) D36TER = TERMK36 (LD) C59 = CBU 59/8 M52 = MK52 Mine HMSL = Harpoon Missile D36 = MK36 (LD) B82 = MK82 (LD) B83 = MK83 (LD) B84 = MK84 (LD) M55 = MK55 Mine M56 = MK56 Mine R36 = MK36 (RET) C20 = MK20 Cluster C20-2 = MK20-Mod 2 Cluster bomb C20-3 = MK 20-Mod 3 Cluster bomb RKTO4 = LAU 10 RKT19 = LAU 61 RKT07 = LAU 68 TERRKT = LAU-10, LAU-61, LAU-68, LAU-69 FLR08 = FLARE SUU-44 TERFLR = TERSUU-405, SUU-44 TERCLS = TER BOMB FTK = FTK10
	YY	Quantity	YY represents 0 through 19 for quantity.
	ZZ	Defect or error	Z represents D if the GPDC inventory differs from the station inventory, or E if GPDC-ACP communication has failed.
8	Blank		
9	TGT ELV	Target Elevation	XXXXX = 00000–99999 feet. Default/Initialize at 0.

Figure 10-14. Kill Stores (STRS-KILL) (Sheet 2)

LINK 11 ORDER (LINK-ORDER)

```
1    OAC          XXXXX
2    ORDR         XXXXXXX
3                 XXXXXXX
4    TN           XXXX
5    FROM         XXX
6    TIME         XXXX
7    RESPNS       XXXXXX
```

PURPOSE:

Informs the operator of a Link 11 order. The Link 11 Order (LINK-ORDER) Tableau may be displayed through the INDEX or ACK ORDER function.

LINE	DESIGNATION	DESCRIPTION	REMARKS
1	OAC	Own Aircraft	XXXXX
2	ORDR	Order	XXXXXXX represents a one or two line message as follows: PROCEED CEASE PROCEED ENGAGE CEASE ENGAGE INVEST CANCEL INVEST
3			See line 2, Remarks.
4	TN	Track number	XXXX represents 1 thru 76, 100 thru 176, or 200 thru 7776 (Octal).
5	FROM	Participating unit address from whom the order was sent	XXX represents 1 thru 76, or 100 thru 176 (Octal).
6	TIME	Time the order was received	XXXX represents 0000 thru 2359.
7	RESPNS	Response	XXXXXX represents the following: WILCO = Will comply. CANTCO = Cannot comply. BLANK = Response not entered. NONE = No receipt/compliance required.

Figure 10-15. Link 11 Order (LINK-ORDER)

LINK 11 PARAMETERS

```
 1  CC STATUS        XXX
 2  RAD      YYYYY   ZZZZ
 3  CH-F     YYXXXXXXX
 4  CKT      XXXXXX
 5  OAC      XX
 6  TNPL     XXXX YYYY
 7  DLAT     XXX XX.XXX
 8  DLON     XXXX XX.XXX
 9  STA      XXXXXX
10  RATE     XXXXXXXXX
11  ERR      XXXXXXX
12  SYNC     XXXXXXXXX
13  FREQ     XXXXXXXX
14  MODE     XXXXXXXXX
15  RNG      XXX
16  LL       FILTER
17   LAT     X XX XX.XXX
18   LON     XXXX XX.XXX
19   RNG     XXX
20   OAC     FILTER   X
21  RNG      XXX
22
23  AIR FRIEND        X
24  AIR ASMD F        X
25  SURF FRIEND       X
26  SURF ASMD F       X
27  ESM               X
28  SONB              X
29  WPN SPLASH PT     X
30  RES REMOTE XXX
```

PURPOSE:

Informs the operator of the configuration of the DTS and system values. The LINK 11 PARAMETERS (LINK PRMTRS) Tableau maybe displayed through the LINK PRMTR function.

Note

Lines 5 through 14 of the LINK 11 PARAMETERS Tableau must be modified via the cueing sequence available when the LINK PRMTR function is activated.

Figure 10-16. Link 11 Parameters (Sheet 1 of 6)

LINE	DESIGNATION	DESCRIPTION	REMARKS
1	CC STATUS	Communication controller	XXX represents: GO = Operable DIS = Disabled DEF = Defective.
2	RAD	Radio	YYYYY represents the following: UHF-1, UHF-2, or HF. ZZZZ represents the following: LSB USB BOTH = USB and LSB Blank = UHF radio has been selected.
3	CH-F	Channel frequency	YY represents 1 through 24. XXXXXXX represents 225.000 through 399.950 MHz or 2.000 through 29.999 MHz.
4	CKT	Circuit	XXXXXX represents CLEAR or SECURE.
5	OAC	Own aircraft	XX represents 1 through 76 (octal) PU address.
6	TNPL	Track number pool	XXXX represents 200 through 7775 (octal) lower limit. YYYY represents 201 through 7776 (octal) upper limit.
	Note Upper limit track number must be greater than lower limit track number.		
7	DLAT	Data link reference point latitude	X XX XX.XXX represents N 90 00.000 thru S 90 00.000.
8	DLON	Data link reference point longitude	XXXX XX.XXX represents E 180 00.000 thru W 180 00.000.
9	STA	Station	XXXXXX represents PICKET = Picket mode or NCS = Navigation control set mode.
10	RATE	Data rate	XXXXXXXXX represents SLOW NORM = 1363.63 BPS (9.09 microseconds drive time); SLOW LONG = 1363 BPS (18.18 microseconds drive time); FAST = 2250 BPS.
11	ERR	Data error	XXXXXXX represents CORRECT = Correct the error, or LABEL = Label as an error.

Figure 10-16. Link 11 Parameters (Sheet 2)

LINE	DESIGNATION	DESCRIPTION	REMARKS
12	SYNC	Synchronization mode	XXXXXXXXX represents STORED or FAST + CONT.
13	FREQ	Frequency standard	XXXXXXXX represents INTERNAL or EXTERNAL.
14	MODE	Net mode	XXXXXXXXX represents ROLL CALL, NET SYNC, or SHORT BC.
15	RNG	Range (Compensation)	XXX represents 0 thru 775 NM (NET SYNC MODE) or BLANK (ROLL CALL MODE).
16	LL FILTER	Longitude/Latitude filter	X represents 0 = Filter not in effect, or 1 = filter in effect.
17	LAT	Latitude of filter	X XX XX.XXX represents N 90 00.000 thru S 90 00.000.
18	LON	Longitude of filter	XXXX XX.XXX represents E 180 00.000 thru W 180 00.000.
19	RNG	Range of filter	XXX represents 0 thru 999 NM.
20	OAC FILTER	Own aircraft filter	Refer to line 16, remarks.
21	RNG	Range (Filter)	XXX represents 0 thru 999 NM.
22	Blank		
23	AIR FRIEND	Friendly air filter	Refer to line 16, remarks.
24	AIR ASMD F	Friendly air filter	Refer to line 16, remarks.
25	SURF FRIEND	Friendly surface filter	Refer to line 16, remarks.
26	SURF ASMD F	Friendly surface filter	Refer to line 16, remarks
27	ESM	Electronic support measures filter	Refer to line 16, remarks
28	SONB	Sonobuoy filter	Refer to line 16, remarks.
29	WPN SPLASH PT	Weapon splash point filter	Refer to line 16, remarks.
30	RES REMOTE	Reserve remote track	XXXX represents 1 thru 7776 (Octal).

Figure 10-16. Link 11 Parameters (Sheet 3)

LINK 11 PARAMETERS

```
 1  NCS XX       NCT      YY
 2                      R   X
 3  PU-RU               R   X
 4    TN POOL           Q   Q
 5   XX
 6    XXXX  YYYY
 7  XXX
 8    XXXX  YYYY        W   Z
 9  XXX
10    XXXX  YYYY        W   Z
11  XXX
12    XXXX  YYYY        W   Z
13  XXX
14    XXXX  YYYY        W   Z
15  XXX
16    XXXX  YYYY        W   Z
17  XXX
18    XXXX  YYYY        W   Z
19  XXX
20    XXXX  YYYY        W   Z
21  XXX
22    XXXX  YYYY        W   Z
23  XXX
24    XXXX  YYYY        W   Z
25  XXX
26    XXXX  YYYY        W   Z
27  XXX
28    XXXX  YYYY        W   Z
29  XXX
30    XXXX  YYYY        W   Z
        Page 2 of 3
```

Figure 10-16. Link 11 Parameters (Sheet 4)

LINE	DESIGNATION	DESCRIPTION	REMARKS
1	NCS	Net control station	XX represents 1 thru 76 (PU address).
	NCT	Net cycle time	YY represents 0 thru 63 seconds.
2	Blank		
3	PU	Participating unit	RQ represents reception quality.
and			
4	RU	Reporting unit	
	TN POOL	Track number pool	XQ represents transmission quality.
5	XX	Own aircraft PU address	XX represents 1 thru 76 (Octal) OAC PU address.
6	XXXX	Lower OAC limit	XXXX represents 200 thru 7775 (Octal) Lower OAC limit.
	YYYY	Upper OAC limit	YYYY represents 201 thru 7776 (Octal) Upper OAC limit.
7 thru 29 (Odd lines)	XXX	Participating unit or Reporting unit number	XXX represents 1 thru 76 (Octal) PU, or 100 thru 176 (Octal) RU number.
8 thru 30 (Even lines)	XXXX	Lower TN pool number	XXXX represents 200 thru 7775 (Octal) Lower PU or RU number.
	YYYY	Upper TN pool number	YYYY represents 201 thru 7776 (Octal) Upper PU or RU number.
		Note Upper TN pool number must be greater than lower TN pool number.	
8 thru 30 (Even lines)	W	Own aircraft reception quality (RQ)	W represents 0 thru 7 (OAC RQ).
8 thru 30 (Even lines)	Z	Own aircraft transmission quality (XQ)	Z represents 0 thru 7 (OAC XQ).

Figure 10-16. Link 11 Parameters (Sheet 5)

LINK 11 PARAMETERS

```
 1  PU-RU              R   X
 2    TN POOL          Q   Q
 3   XX
 4    XXXX  YYYY       W   Z
 5  XXX
 6    XXXX  YYYY       W   Z
 7  XXX
 8    XXXX  YYYY       W   Z
 9  XXX
10    XXXX  YYYY       W   Z
11  XXX
12    XXXX  YYYY       W   Z
13  XXX
14    XXXX  YYYY       W   Z
15  XXX
16    XXXX  YYYY       W   Z
        Page 3 of 3
```

LINE	DESIGNATION	DESCRIPTION	REMARKS
1 and 2	PU RU RQ XQ TN POOL	Participating unit Reporting unit Reception quality Transmission quality Track number pool	
3 thru 15 (Odd lines)			Refer to lines 7 thru 29 (odd lines), Part 1.
4 thru 16 (Even Lines)			Refer to lines 8 thru 30 (even lines), Part 1.
	W Z		Refer to lines 8 thru 30 (even lines), Part 1.

Figure 10-16. Link 11 Parameters (Sheet 6)

LINK 11 PU LIST (PU)

```
 1  NCS XX       NCT      YY
 2
 3  PU-RU              R   X
 4    TN POOL          Q   Q
 5   XX
 6    XXXX  YYYY
 7  XXX
 8    XXXX  YYYY       W   Z
 9  XXX
10    XXXX  YYYY       W   Z
11  XXX
12    XXXX  YYYY       W   Z
13  XXX
14    XXXX  YYYY       W   Z
15  XXX
16    XXXX  YYYY       W   Z
17  XXX
18    XXXX  YYYY       W   Z
19  XXX
20    XXXX  YYYY       W   Z
21  XXX
22    XXXX  YYYY       W   Z
23  XXX
24    XXXX  YYYY       W   Z
25  XXX
26    XXXX  YYYY       W   Z
27  XXX
28    XXXX  YYYY       W   Z
29  XXX
30    XXXX  YYYY       W   Z
        Page 1 of 2
```

PURPOSE:

Inform the operator of the participating unit list. The Link 11 PU List Tableau may be displayed through the INDEX function.

Figure 10-17. Link 11 PU List (PU) (Sheet 1 of 3)

LINE	DESIGNATION	DESCRIPTION	REMARKS
1	NCS	Net control station	XX represents 1 thru 76 (PU address).
	NCT	Net cycle time	YY represents 0 thru 63 seconds.
2	Blank		
3 and 4	PU	Participating unit	RQ represents reception quality.
	RU	Reporting unit	
	TN POOL	Track number pool	XQ represents transmission quality.
5	XX	Own aircraft PU address	XX represents 1 thru 76 (Octal) OAC PU address.
6	XXXX	Lower OAC limit	XXXX represents 200 thru 7775 (Octal) Lower OAC limit.
	YYYY	Upper OAC limit	YYYY represents 201 thru 7776 (Octal) Upper OAC limit.
7 thru 29 (Odd lines)	XXX	Participating unit or Reporting unit number	XXX represents 1 thru 76 (Octal) PU, or 100 thru 176 (Octal) RU number.
8 thru 30 (Even lines)	XXXX	Lower TN pool number	XXXX represents 200 thru 7775 (Octal) Lower PU or RU number.
	YYYY	Upper TN pool number	YYYY represents 201 thru 7776 (Octal) Upper PU or RU number.
		Note Upper TN pool number must be greater than lower TN pool number.	
8 thru 30 (Even lines)	W	Own aircraft reception quality (RQ)	W represents 0 thru 7 (OAC RQ).
8 thru 30 (Even lines)	Z	Own aircraft transmission quality (XQ)	Z represents 0 thru 7 (OAC XQ).

Figure 10-17. Link 11 PU List (PU) (Sheet 2)

LINK 11 PU LIST

```
 1  PU-RU              R   X
 2    TN POOL          Q   Q
 3   XXX
 4    XXXX  YYYY       W   Z
 5  XXX
 6    XXXX  YYYY       W   Z
 7  XXX
 8    XXXX  YYYY       W   Z
19  XXX
10    XXXX  YYYY       W   Z
11  XXX
12    XXXX  YYYY       W   Z
13  XXX
14    XXXX  YYYY       W   Z
15  XXX
16    XXXX  YYYY       W   Z
        Page 2 of 2
```

LINE	DESIGNATION	DESCRIPTION	REMARKS
1 thru 16		**Note** Refer to lines 1 thru 16, Part 1, of Link 11 Parameters Tableau.	
1 and 2	PU RU RQ XQ TN POOL	Participating unit Reporting unit Reception quality Transmission quality Track number pool	Refer to lines 7 thru 29 (odd lines), Part 1.
3 thru 15 (Odd lines)			Refer to line 8 thru 30 (even lines), Part 1.
4 thru 16 (Even Lines)	W Z		Refer to lines 8 thru 30 (even lines), Part 1.

Figure 10-17. Link 11 PU List (PU) (Sheet 3)

NAV PARAMETERS TABLEAU

```
 1  THDG   X  X  X
 2  DRFT   Z  X  X  X
 3  TRK    X  X  X
 4  MVAR   Z  X  X  X
 5  ALT    X  X  X  X  X  Y
 6  BAR  SET      X  X  .  X  X
 7  GS     X  X  X
 8  TAS    X  X  X
 9  ETA    X  X    X  X    X  X
10  TG     X  X    X  X    X  X
11  DTG    X  X  X  .  X
12
13         DIR          SPD
14  WIND   X  X  X       X  X  X
15
16
17  ALTITUDE
18    MODE            X  X  X  X  X  X
19    SOURCE          X  X  X  X  X  X
20    STATUS          X  X  X  X  X  X
21
22  SYS SEL STAT                 Y
23    ACT     X  X  X  X  X  X  X  X  X
24
25  GEO POSN
26    LT D  X  X  X    X  X  .  X  X  X
27    LN D  X  X  X  X    X  X  .  X  X  X
28  TACNAV DELTA
29    BRG   X  X  X
30    RNG   X  X  X  X
```

Figure 10-18. Configuration NAV Parameters (PRMTRS) (Sheet 1 of 3)

NAV Parameters (PRMTRS)

LINE	DESIGNATION	REMARKS
1	THDG	This line contains the current true heading of the aircraft measured in degrees, positive clockwise from true north.
2	DRFT	This line contains the aircraft drift angle measured in degrees, left (minus) or right (plus), of the longitudinal axis of the aircraft. The plus or minus is displayed in column 9.
3	TRK	This line contains the aircraft track angle measured in degrees, positive clockwise from true north.
4	MVAR	This line contains the local magnetic variation and is measured in degrees, east (plus) or west (minus) of magnetic north. The plus or minus sign is displayed in column 9. The source of magnetic variation will be the CDNU (via the NIU).
5	ALT	Columns 9–13 contain the aircraft altitude in feet. Column 14 contains an indication of the altitude status as follows: Symbol: R = RAWWS B = Barometric V = Both RAWWS and Baro are invalid M = Operator Modified S = System. **Note** This line is modifiable only when status is M or V (GPDC mode only).
6	BAR SET	This line contains the system Barometric Altitude setting in inches of mercury (default setting is 29.92).
7	GS	This line contains the aircraft ground speed in knots.
8	TAS	This line contains the aircraft smoothed horizontal true air speed in knots.
9	ETA	Available from the Steering Subprogram; provides estimated time of arrival at the currently active FTP (measured in hours, minutes, and seconds).
10	TTG	Available from the Steering Subprogram; provides expected time enroute to the currently active FTP (measured in hours, minutes, and seconds).
11	DTG	Available from the Steering Subprogram; provides distance-to-go to the currently active FTP (measured in nautical miles and tenths of nautical miles).
13	DIR SPD	This line defines the columns for line 14.
14	WIND	This line contains the wind speed and direction measured in knots and degrees, positive clockwise from true north, respectively. The wind direction is the direction from which the wind is acting.
17	ALTITUDE	This line is a header for lines 18, 19, and 20, which contain altitude mode and status info.
18	MODE	This line will define the altitude mode as “SYSTEM” or “GPDC.”
19	SOURCE	This line will define the altitude submode or source as “auto” or “baro” when in the GPDC alt mode. When in the system alt mode, the altitude submode or source will be “system.”

Figure 10-18. Configuration NAV Parameters (PRMTRS) (Sheet 2)

NAV Parameters (PRMTRS)

LINE	DESIGNATION	REMARKS
20	STATUS	This line defines the altitude status as “RAAWS,” “BARO,” “Inval,” or “Man.”
22	SYS SEL STAT	Acts as a header for the NAV System Select Status configuration in line 23, and also displays numeric designator for the current active system select status (0–7) configuration supplying Nav data.
23	ACT	Displays the Nav System Select Status configuration which is active and corresponding to the numeric in line 22, the possible entries are (1) “EGI,” (2) “CAINS/GPS,” (3) “CAINS,” (4) “EINS,” (5) “EGPS,” (6) “GPS,” (7) “CDNU,” or (0) BLANK (corresponds to NONE/FAIL).
25	GEO POSN	Lines 26 and 27 contain the aircraft geographic position.
26	LT	These lines contain the aircraft geographic latitude/longitude expressed in degrees, minutes and decimal minutes. Column 8 of line 26 contains the latitude direction (N or S); column 8 of line 27 contains the longitude direction (E or W).
27	LN	
28	TACNAV DELTA	This line is a header for lines 29 and 30 that define TACNAV delta values. No longer used.
29	TACNAV BRG	This line provides the TACNAV delta bearing, and shows the relative difference between the geo position and the position associated with the aircraft symbol, in degrees, while in TACNAV. No longer used.
30	TACNAV RNG	This line provides the TACNAV delta range in yards. This value is the difference in distance between the geo position and the position associated with the aircraft symbol location while in Tacnav. No longer used.

Figure 10-18. Configuration NAV Parameters (PRMTRS) (Sheet 3)

NAV STATUS TABLEAU

```
 1
 2
 3
 4
 5  NAV SENSOR STAT
 6   EINS          X
 7   CAINS         X
 8   GPS           X
 9   TACAN         X
10   RAAWS         X
11   EGPS          X
12
13
14  ALIGN STAT
15   EGI
16    NONE         Y
17    ALIGNING     Y
18    ALIGNED      Y
19   CAINS
20    NONE         Z
21    ALIGNING     Z
22    ALIGNED      Z
23
24
25
26
27
28
29
30
```

Figure 10-19. Configuration NAV STATUS Tableau (Sheet 1 of 2)

ROW	CAPTION	DESCRIPTION
5	NAV SENSOR STAT	This line defines columns 5–9 and 16 for lines 06–10.
6	EINS	A 0 or 1 in column 16 of this line indicates an EINS Go or No-Go condition respectively.
7	CAINS	A 0 or 1 in column 16 of this line indicates a CAINS Go or No-Go condition, respectively.
8	MAGR	A 0 or 1 in column 16 of this line indicates a MAGR (GPS) Go or No-Go condition, respectively.
9	TACAN	A 0 or 1 in column 16 of this line indicates a TACAN Go or No-Go condition, respectively.
10	RAAWS	A 0 or 1 in column 16 of this line indicates a RAAWS Go or No-Go condition, respectively.
11	EGPS	A 0 or 1 in column 16 of this line indicates a EGPS Go or No-Go condition, respectively.
14	ALIGN STATUS	This line defines columns 5–13 and 16 for lines 15–22.
15	EGI	This line defines columns 6–13, and 16 for lines 16–18.
16	NONE	A 0 or 1 in this line indicates that EGI alignment status is, or is not available, respectively.
17	ALIGNING	A 0 or 1 in column 16 of this line indicates that the EGI is not, or is currently in the process of aligning, respectively.
18	ALIGNED	A 0 or 1 in column 16 of this line indicates that the EGI is not, or is currently aligned, respectively.
19	CAINS	This line defines columns 6–13 and 16 for lines 20–22.
20	NONE	A 0 or 1 in this line indicates that CAINS alignment status is, or is not available, respectively.
21	ALIGNING	A 0 or 1 in column 16 of this line indicates that CAINS is not, or is currently in the process of aligning, respectively.
22	ALIGNED	A 0 or 1 in column 16 of this line indicates that CAINS is not, or is currently aligned, respectively.

Figure 10-19. Configuration NAV STATUS Tableau (Sheet 2)

NIU 1 EXPANDED SUBSYSTEM STATUS

1		D
2		E
3		F
4		
5	NIU1 STAT	
6		
7	RPT BY SELF	
8	CHANNEL1	X
9	1553 BUS	X
10		
11	RPT BY OTHER CH	
12	CHANNEL1	X
13	1553 INTF	X
14	TYP1 INTF	X
15		
16	RPT BY GPDC	
17	TYP1 INTF	X
18		
19		
20		

Figure 10-20. NIU 1 Expanded Subsystem Status (Sheet 1 of 2)

ROW	CAPTION	DESCRIPTION
5	NIU1 STAT	Main Header Indicating NIU channel to which this tableau corresponds.
6	Blank	
7	RPT BY SELF	Header for defects reported in NIU channel 1 by NIU channel 1.
8	CHANNEL1	A 0 or 1 in column 16 of this line indicates that NIU 1 has not reported, or has reported, a problem with its own channel, respectively.
9	1553 INTF	A 0 or 1 in column 16 of this line indicates that NIU 1 has not reported, or has reported, a problem with the 1553 interface associated with its own channel, respectively.
10	Blank	
11	RPT BY OTHER CH	Header for defects reported in NIU channel 1 by NIU channel 2.
12	CHANNEL1	A 0 or 1 in column 16 of this line indicates that a problem has not been reported, or has been reported with NIU channel 1 by the other NIU channel NIU 2, respectively.
13	1553 INTF	A 0 or 1 in column 16 of this line indicates that a problem has not been reported, or has been reported, with the 1553 interface associated with NIU channel 1 by the other channel NIU 2, respectively.
14	TYPE1 INTF	A 0 or 1 in column 16 of this line indicates that a problem has not been reported, or has been reported, in the type 1 interface associated with NIU channel 1 by the other NIU channel, NIU 2, respectively.
15	Blank	
16	RPT BY GPDC	Header for defects reported in NIU channel 1 by the GPDC.
17	TYPE 1 INTF	A 0 or 1 in column 16 of this line indicates that a problem has not been reported, or has been reported, with the type 1 interface associated with NIU channel 1 by the GPDC.

Figure 10-20. NIU 1 Expanded Subsystem Status (Sheet 2)

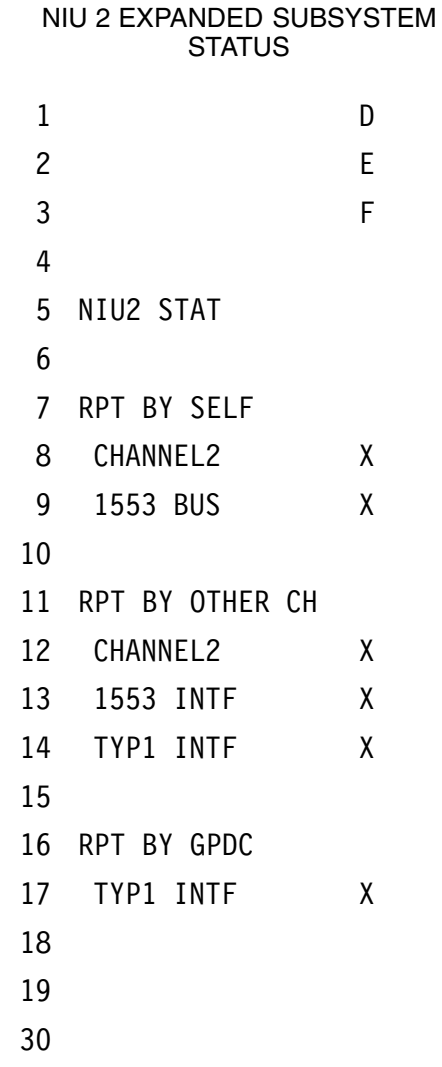

Figure 10-21. NIU 2 Expanded Subsystem Status (Sheet 1 of 2)

ROW	CAPTION	DESCRIPTION
5	NIU2 STAT	Main Header indicating NIU channel to which this tableau corresponds.
6	Blank	
7	RPT BY SELF	Header for defects reported in NIU channel 2 by NIU channel 2.
8	CHANNEL2	A 0 or 1 in column 16 of this line indicates that NIU 2 has not reported, or has reported, a problem with its own channel, respectively.
9	1553 INTF	A 0 or 1 in column 16 of this line indicates that NIU 2 has not reported, or has reported, a problem with the 1553 interface associated with its own channel respectively.
10	Blank	
11	RPT BY OTHER CH	Header for defects reported in NIU channel 2 by NIU channel 1.
12	CHANNEL2	A 0 or 1 in column 16 of this line indicates that a problem has not been reported, or has been reported with NIU channel 2 by the other NIU channel NIU 1, respectively.
13	1553 INTF	A 0 or 1 in column 16 of this line indicates that a problem has not been reported, or has been reported, with the 1553 interface associated with NIU channel 2 by the other channel NIU 1, respectively.
14	TYPE1 INTF	A 0 or 1 in column 16 of this line indicates that a problem has not been reported, or has been reported, in the type 1 interface associated with NIU channel 2 by the other NIU channel NIU 1, respectively.
15		
16	RPT BY GPDC	Header for defects reported in NIU channel 2 by the GPDC.
17	TYPE 1 INTF	A 0 or 1 in column 16 of this line indicates that a problem has not been reported, or has been reported, with the type 1 interface associated with NIU channel 2 by the GPDC.

Figure 10-21. NIU 2 Expanded Subsystem Status (Sheet 2)

NOTE PAD

1	XXXXXXXXXXXXXXX	M
2	XXXXXXXXXXXXXXX	M
3	XXXXXXXXXXXXXXX	M
4	XXXXXXXXXXXXXXX	M
5	XXXXXXXXXXXXXXX	M
6	XXXXXXXXXXXXXXX	M
7	XXXXXXXXXXXXXXX	M
8	XXXXXXXXXXXXXXX	M
9	XXXXXXXXXXXXXXX	M
10	XXXXXXXXXXXXXXX	M
11	XXXXXXXXXXXXXXX	M
12	XXXXXXXXXXXXXXX	M
13	XXXXXXXXXXXXXXX	M
14	XXXXXXXXXXXXXXX	M
15	XXXXXXXXXXXXXXX	M
16	XXXXXXXXXXXXXXX	M
17	XXXXXXXXXXXXXXX	M
18	XXXXXXXXXXXXXXX	M
19	XXXXXXXXXXXXXXX	M
20	XXXXXXXXXXXXXXX	M
21	XXXXXXXXXXXXXXX	M
22	XXXXXXXXXXXXXXX	M
23	XXXXXXXXXXXXXXX	M
24	XXXXXXXXXXXXXXX	M
25	XXXXXXXXXXXXXXX	M
26	XXXXXXXXXXXXXXX	M
27	XXXXXXXXXXXXXXX	M
28	XXXXXXXXXXXXXXX	M
29	XXXXXXXXXXXXXXX	M
30	XXXXXXXXXXXXXXX	M

PURPOSE:

Provide the operator with a tableau in which important information may be inserted. The Note Pad Tableau may be displayed through the INDEX function.

Note

All lines are initially blank and are modifiable by alphanumerics. Performing a TABLE EXTRCT of the NOTE PAD Tableau will clear all displayed information.

Figure 10-22. Note Pad

OPERATOR LIBRARY

```
 1      OPER LBRY
 2
 3    ID  NAME      STAT
 4     1  OPER1     XXXXX
 5     2  OPER2     XXXXX
 6     3  OPER3     XXXXX
 7     4  OPER4     XXXXX
 8     5  OPER5     XXXXX
 9     6  OPER6     XXXXX
10     7  OPER7     XXXXX
11     8  OPER8     XXXXX
12     9  OPER9     XXXXX
13    10  OPER10    XXXXX
14    11  OPER11    XXXXX
15    12  OPER12    XXXXX
16    13  OPER13    XXXXX
17    14  OPER14    XXXXX
18    15  OPER15    XXXXX
19    16  OPER16    XXXXX
```

PURPOSE:

The Operator Library Tableau enables the operator to view in summary all operator library entries.

LINE	DESIGNATION	DESCRIPTION	REMARKS
2	Blank		
3	STAT	Status of emitter.	
4 thru 19	XXXXX	(Blank) = not entered by operator. INACT = entered by not utilized by ESM for scan and for matching. ACT = Entered and being utilized by ESM for scan and/or matching.	

Figure 10-23. Operator Library

PROGRAM STATUS TABLEAU (STAT-PRGM)

```
 1
 2 FCTN
 3 NAV          A      F
 4 DEP          A
 5 TD           A
 6 STEER        A      F
 7 SLTA         A
 8
 9 RADAR        A
10 ESM          A
11 FLIR         A
12 SESCON       A
13 BALL         A
14 ARMCON       A
15
16 COMM         A
17
18
19
20
21
22
23 LOADED       Y      Y
24
25 FAILURE
26 MEM                 F
```

PURPOSE:

Allow the operator to view the overall operational program status.

Figure 10-24. Program Status (STAT PRGM)(AYK-10 only) (Sheet 1 of 2)

LINE	DESIGNATION	DESCRIPTION	REMARKS
1	Blank		
2	FCTN	Function	Functions are displayed on lines 3 through 16. System load capabilities of each function with the letters A or F on lines 3 through 16 with A representing a full-up, nondegraded load, and F representing a maximum degraded system load.
3	NAV	Navigation	
4	DEP	Data extraction program	
5	TD	Tactical diagnostics	
6	STEER	Steering	
7	SLTA	Search, localization, track, attack	
8	Blank		
9	RADAR	Radio detection and ranging	
10	ESM	Electronic support measures	
11	FLIR	Forward looking infrared	
12	SESCON	Search stores control	
13	Ball	Ballistics	
14	ARMCON	Armament control	
15	Blank		
16	COMM	Communications	
17	Blank		
18	Blank		
19	Blank		
20	Blank		
21	Blank		
22	Blank		
23	LOADED	Variable indicates current load configuration	Y = 0 or 1. 0 indicates good load path found on first attempt. 1 indicates alternate bad path.
24	Blank		
25	FAILURE		Loads available with specific component failures are matrixed on line 26.
26	MEM	Memory unit	

Figure 10-24. Program Status (STAT PRGM)(AYK-10 only) (Sheet 2)

RADAR EXPANDED SUBSYSTEM STATUS

```
 1  RDR         TTTT
 2
 3  REPLACE-
 4
 5  YYYYYYYYYYYY ZZ
 6   WWWWWWWWWWW
 7  YYYYYYYYYYYY ZZ
 8   WWWWWWWWWWW
 9  YYYYYYYYYYYY ZZ
10   WWWWWWWWWWW
11  YYYYYYYYYYYY ZZ
12   WWWWWWWWWWW
13  YYYYYYYYYYYY ZZ
14   WWWWWWWWWWW
15
16 REINIT RUN  N  I
17 TD RUN      N  F
18                PT
19 DEFECT-        MD
20
21 XXXXXXXXXX     NN
22  XXXXXXXXXX    NN
23 XXXXXXXXXX     NN
24  XXXXXXXXXX    NN
25 XXXXXXXXXX     NN
26  XXXXXXXXXX    NN
27 XXXXXXXXXX     NN
28  XXXXXXXXXX    NN
29 XXXXXXXXXX     NN
30  XXXXXXXXXX    NN
```

PURPOSE:

Allow the operator to observe the operational status of the radar. May be displayed through the SYSTEM STATUS option.

Figure 10-25. Radar Expanded Subsystem Status (Sheet 1 of 3)

LINE	DESIGNATION	DESCRIPTION	REMARKS
1	RDR, TTTT	Time of last radar event.	TTTT = system time.
2	Blank		
3	REPLACE-	Indicates up to 5 WRAs to be replaced (with the oldest WRA aging out). Also, can display messages to check waveguide pressure and APX-76.	
4	Blank		
5–14	Messages	Designates the WRA by descriptor and nomenclature for removal and replacement.	Y = Descriptor/locator. ZZ = Line number for first related defect. W = WRA/SRA designator. RIU C11164 APS 137V CONV CV3774 APS 137V SYNC SN546 APS 137V PS PP7813 APS 137V XMTR T1203 APS 116 RCVR R2231 APS 137V ANT AS3637 APS 137V ROLL GMBL 5A1 PITCH GMBL 5A3 TILT GMBL 5A4 AZIMUTH GMBL 5A2 ENCODER 5A6 CHECK WG PRESSURE CHECK APX-76
15	Blank		
16	REINIT RUN, N	Displays the number of times the radar has been reinitialized.	N = 1 to 9 or blank.
16–19	IFTM	Identifies source title of defect message.	None.
17	TD RUN, N	Displays the number of times TD has been activated.	N = 1 to 9 or blank.

Figure 10-25. Radar Expanded Subsystem Status (Sheet 2)

LINE	DESIGNATION	DESCRIPTION	REMARKS
18–19	TD	Identifies source title of defect message.	None.
19	DEFECT	Displays up to 5 defect/test-go messages with the oldest message aging out.	
20	Blank		
21–30	Messages		X = Defect.
			IO TIMEOUT GPDC 27
			PAR ERROR IN GPDC
			PAR ERROR OUR RIU
			FUNC CODE ERROR
			MULTIPLE EI 50 MS
			ANT ROLL GMBL
			ANT PITCH GMBL
			ANT TILT GMBL
			ANT AZIMUTH GMBL
			ANT ENCODER
			WAVEGUIDE PRESSURE
			IFF TRIGGER
			RIU
			SCAN CONVERTER
			SYNC EXCITER
			PROGRAMMER PWR SUPPLY
			RECEIVER
			ANTENNA OR TRANSMITTER
			PERISCOPE MODE
			NAV-WEATHER MODE
			SURF SEARCH MODE
			IMAGE MODE
			ALL MODES
			DIAG ONE MIN TIMEOUT
			DIAG SIX MIN TIMEOUT

Figure 10-25. Radar Expanded Subsystem Status (Sheet 3)

RADAR PRMTRS

```
 1 RADAR PRMTRS
 2
 3 VID THRESH        X
 4 RCVR GAIN         X
 5 FAR PPI           X
 6 FAR B-SCAN        X
 7 XMTR LOAD         XXX
 8 APERTURE          YX
 9 TDS INTEN         XXX
10 RNG-HD MKS        XXX
11 HDG MK            XXXX
12 VID GAIN          X
13 AMPTD PROC        XXX
```

PURPOSE:

Provides operator with status of current radar parameters. Displayed upon activation of the SET PRMTRS function.

LINE	DESIGNATION	DESCRIPTION	REMARKS
1	RADAR PRMTRS	Title line of Radar Parameters Status Tableau	
2	Blank		
3	VID THRESH	Current video threshold setting	X = 0 to 7
4	RCVR GAIN	Current receiver gain setting	X = 1 to 8
5	FAR PPI	Current PPI false alarm rate setting	X = 1 to 8
6	FAR B-SCAN	Current B-Scan false alarm rate setting	X = 1 to 8
7	XMTR LOAD	Current status of transmitter load	XXX = ANT = Antenna = DUM = Dummy load
8	APERTURE	Current image aperture setting	YX = 1X, 2X, 4X where “X” represents minimum aperture time
9	TDS INTEN	Current status/intensity of Target Designator Symbol (TDS)	XXX = OFF or 1 to 7
10	RNG-HD MKS	Current status/intensity setting of range/heading marks	XXX = OFF or 1 to 7
11	HDK MK	Current status of heading marks	XXXX = AVAL = Heading marks displayed when range marks displayed Blank screen = INHB = Heading marks inhibited from display
12	VD GAIN	Current video gain setting	X = 0 to 7
13	AMPTD PROC	Current status of amplitude processing	XXX = ON or OFF

Figure 10-26. Radar Parameters (RADAR PRMTRS)

RIG

```
 1 TN    XXXXXXXXXX  M
 2 CNCT  XXXXXXXXXX  M
 3 NAME  XXXXXXXXXX  M
 4 NO    XXXXXXXXXX  M
 5 TYPE  XXXXXXXXXX  M
 6 NATN  XXXXXXXXXX  M
 7 CLAS  XXXXXXXXXX  M
 8 CONF  XXXXXXXXX   M
 9 GRP   XXXXXXXXXX  M
10 HULL  XXXXXXXXXX  M
11 STRN  XXXXXXXXXX  M
12 UPRT  XXXXXXXXXX  M
13 LOA   XXXXXXXXXX  M
14 WT    XXXXXXXXXX  M
15 REMARKS
16 XXXXXXXXXXXXXXX   M
17 XXXXXXXXXXXXXXX   M
18 XXXXXXXXXXXXXXX   M
19 XXXXXXXXXXXXXXX   M
20 XXXXXXXXXXXXXXX   M
21 XXXXXXXXXXXXXXX   M
22 XXXXXXXXXXXXXXX   M
23 XXXXXXXXXXXXXXX   M
24 XXXXXXXXXXXXXXX   M
25 XXXXXXXXXXXXXXX   M
26 XXXXXXXXXXXXXXX   M
27 XXXXXXXXXXXXXXX   M
28 XXXXXXXXXXXXXXX   M
29 XXXXXXXXXXXXXXX   M
30 XXXXXXXXXXXXXXX   M
```

PURPOSE:

Allow the operator to fully describe a vessel of interest. The Rig Tableau may be displayed through the INDEX function.

Figure 10-27. Rig (Sheet 1 of 2)

LINE	DESIGNATION	DESCRIPTION	REMARKS
1	TN	Track number	
2	CNCT	Contact number	
3	NAME	Name of vessel	
4	NO	Vessel type	
5	TYPE	Vessel type	
6	NATN	Nationality	
7	CLAS	Sub classification	
8	CONF	Confidence level	
9	GRP	Group type	
10	HULL	Hull profile	
11	STRN	Stern type	
12	UPRT	Upright sequence	
13	LOA	Length	
14	WT	Weight	
15	REMARKS		

Note

- Lines 1 through 30 are modifiable by alphanumerics.
- Performing TABLE EXTRCT of the RIG Tableau will clear all displayed information.

Figure 10-27. Rig (Sheet 2)

SRCH STRS LOAD (SRCH)

1	LC	SSQ	RF	ADL	D
2					
3	A1	XXX	YY	PQR	Z
4	A2	XXX	YY	PQR	Z
5	B1	XXX	YY	PQR	Z
6	B2	XXX	YY	PQR	Z
7	C1	XXX	YY	PQR	Z
8	C2	XXX	YY	PQR	Z
9	D1	XXX	YY	PQR	Z
10	D2	XXX	YY	PQR	Z
11	D3	XXX	YY	PQR	Z
12	D4	XXX	YY	PQR	Z
13	D5	XXX	YY	PQR	Z
14	D6	XXX	YY	PQR	Z
15	D7	XXX	YY	PQR	Z
16	D8	XXX	YY	PQR	Z
17	E1	XXX	YY	PQR	Z
18	E2	XXX	YY	PQR	Z
19	E3	XXX	YY	PQR	Z
20	E4	XXX	YY	PQR	Z
21	E5	XXX	YY	PQR	Z
22	E6	XXX	YY	PQR	Z
23	E7	XXX	YY	PQR	Z
24	E8	XXX	YY	PQR	Z

PURPOSE:

Inform the operator of the status of the sesarch stores load. The Search Stores (ARCH STRS LOAD) Tableau may be displayed through the INDEX or STR LOAD functions.

Note

The Search Stores (SRCH STRS LOAD) Tableau may be modified only when displayed by the STR LOAD function.

Figure 10-28. SRCH STRS Load (SRCH) (Sheet 1 of 2)

Note

- All 60 chutes in the Search Stores Load Tableau can contain PID stores or have stores manually entered into them. However, on aircraft modified by AFC-284 only the following 15 sonobuoy chutes are available for on-line sonobuoy deployment: H-4, H-5, J-1, J-2, K-1, K-2, L-1, L-2, M-1, M-2, N-1, N-2, O-1, O–2, P-1. These launch chute designators appear on pages 2 and 3 of the Search Stores Load Tableau. All other launch chute entries will be blank or indicate defective if stores have been entered into them.
- SSQ-36 or SSQ-57 buoys entered via PID will not be displayed in the STORES LOAD Tableau.
- Any attempt to enter an SSQ-36 or SSQ-57 buoy into the STORES LOAD Tableau will cause a “NOT AVAIL” alert to be displayed.

LINE	DESIGNATION	DESCRIPTION	REMARKS
1	LC	Sonobuoy launch chute designation.	
	SSQ	Search Store type nomenclature. 2 numerics plus possible letter.	
	RF	Sonobuoy RF channel.	
	A	Audio frequency channel. Also used to display a B for bottom bounce or a C for convergence zone for the 77B buoy.	
	D	Hydrophone depth.	
	L	Sonobuoy life.	
	D	Defective.	R in this column indicates Reserved.
2	Blank	None.	None.
3-24	A1 thru E8	Sonobuoy launch chute.	
	XXX	Search store type.	XXX represents 25, 41, 53B, 53D, 58, 62B, 62C, 77A, 77B, or 84.
	YY	Sonobuoy channels.	YY represents 1 thru 99.
	P	Audio frequency channel.	P represents A, B, C, D for SSQ-62.
	Q	Hydrophone depth.	Q represents: S = shallow, M = medium, D = deep, C = combined for DICASS, E = extended deep, or Blank = Stores without hydrophone.
	R	Sonobuoy life.	R represents: H = 0.5 hour, 1, 2, 3, 4, or 8 hours, or Blank = Stores with set life.
	Z	Defect or error.	Z represents: D = difference between stated inventory and existing continuity, E = AUTO/MNL switch is in the MNL mode, or blank for GO, R = reserved, or Blank = not reserved.

Figure 10-28. SRCH STRS Load (SRCH) (Sheet 2)

CC EXPANDED SUBSYSTEM STATUS

```
 1            D     D
 2            E     I
 3            F     S
 4
 5 CC         X     Y
 6 UHF-1      X
 7 VSWR       X
 8 UHF-2      X
 9 VSWR       X
10 HF         X
11 DTS        X
12 RSCI       X
13 CI TACO    X
14 CI SENS    X
15 CI CP      X
16 CI PL      X
```

PURPOSE:

Allow the operator to view the status of the CC.

LINE	DESIGNATION	DESCRIPTION	REMARKS
1–3	DEF DIS	Defect and disable title.	None.
4	Blank		
5	CC	Communication controller.	X = 1 Defect 0 No defect Y = 1 Disabled 0 Enabled
6	UHF-1	UHF radio number1.	X = 1 Defect 0 No defect
7	VSWR	Voltage Standing Wave Ratio.	X = 1 Defect 0 No defect
8	UHF-2	UHF radio number 2.	X = 1 Defect 0 No defect
9	VSWR	Voltage Standing Wave Radio.	X = 1 Defect 0 No defect
10	HF	High frequency radio.	X = 1 Defect 0 No defect

Figure 10-29. CC Expanded Subsystem Status (Sheet 1 of 2)

LINE	DESIGNATION	DESCRIPTION	REMARKS
11	DTS	Data Terminal Set.	X = 1 Defect 0 No defect
12	RSCI	Radio set control indicator.	X = 1 Defect 0 No defect
13	CI TACO	TACCO control indicator.	X = 1 Defect 0 No defect
14	CI SENS	SENSO control indicator.	X = 1 Defect 0 No defect
15	CI CP	COTAC control indicator.	X = 1 Defect 0 No defect
16	CI PL	Pilot control indicator.	X = 1 Defect 0 No defect

Figure 10-29. CC Expanded Subsystem Status (Sheet 2)

SONOBUOY AMPLIFY

```
 1 TN
 2 LNK   XXXX XXXXX
 3 TYPE  XXX
 4 RF    XX
 5 LAT   X XX XX.XXX
 6 LON   XXXX XX.XXX
 7 DTIM  XX XX XX
 8 DPTH  X XXXXXXXX
 9 MGT   XXXXXXXXXX
10 L-R   XXX
11 TUNE  XXX
12 SRS   XXX
13 AF    X
14 CNTC  XXX
```

PURPOSE:

Inform the operator of amplifying data concerning a sonobuoy. The Sonobuoy Amplify Tableau may be displayed through the AMPLFY function when a sonobuoy is hooked.

LINE	DESIGNATION	DESCRIPTION	REMARKS
1	TN	Track number.	
2	LNK	Data link track number.	XXXX represents: 200 thru 7776 (Octal) or Blank = Remote track. XXXXX = The first and second characters are entered with alpha or numeric, and the third, fourth, and fifth characters are entered as numeric only.
3	TYPE	Sonobuoy type.	XXX represents 36, 36A, 53B, 53D, 41, 62B, 62C, 57B, 77A, or 77B.
4	RF	Sonobuoy RF channel.	XX represents 1 thru 99.
5	LAT	Latitude.	X XX XX.XXX represents N 90 00.000 thru S 90 00.000.
6	LON	Longitude.	XXXX XX.XXX represents E 180 00.000 thru W 180 00.000.

Figure 10-30. Sonobuoy Amplify (Sheet 1 of 2)

LINE	DESIGNATION	DESCRIPTION	REMARKS
7	DTIM	Dead time of sonobuoy (predicted).	XX XX XX represents 00 00 00 thru 23 59 59.
8	DPTH	Depth of sonobuoy.	X XXXXXXXX represents: S 0–99 = shallow 0 to 99 feet; M 100–999 = medium 100 to 999 feet; D 1k–1.5k = deep 1,000 to 1,500 feet; E 2500 = extended deep 2,500 feet.
9	MGT	Management.	XXXXXXXXXX represents the following: ASSOC = Link track is associated with another link track; EMERG = Emergency condition; FORCE TELL = Force commander wants all units to receive this link track; BLANK = None of the above.
10	L-R	Local/Remote.	XXX represents: REM = Remote.
11	TUNE	Sonobuoy tune status.	XXX represents: NO = Sonobuoy is not tuned. The tuning status of remote sonobuoys reads NO whether or not the remote buoy is tuned.
12	SRS	Sonobuoy reference system.	XXX represents: NO = SRS is not updating the sonobuoy. The SRS status of remote sonobuoys reads NO whether or not the remote buoy is tuned to a sonobuoy receiver system.
13	AF	Audio frequency.	X represents: A thru F or Blank = No AF channel.
14	CNCT	Contact.	XXX represents: NO = Sonobuoy is not holding sub contact. The contact status of remote sonobuoys reads NO whether or not the remote buoy is holding a sub contact.

Figure 10-30. Sonobuoy Amplify (Sheet 2)

```
      SYSTEM STATUS

 1              D D T
 2              E I D
 3              F S
 4
 5 DISCOS       X X
 6  TACCO       X X
 7  SENSO       X X
 8  CP          X X
 9  PL          X X
10 DSPL         X X
11  TACCO       X X
12  SENSO       X X
13  CP          X X
14  PL          X X
15
16 DMTU         X X
17 CP0          X X
18 CP1          X X
19 IOC0         X X
20 IOC1         X X
21
22
23
24 ARRAYS DISABLED
25 ZZ ZZ ZZ ZZ ZZ
26 ZZ ZZ ZZ ZZ ZZ
```

Page 1 of 2

PURPOSE:

Inform the operator of the avionics system status. The SYSTEM STATUS Tableau maybe displayed through the SYSTEM STATUS function.

Figure 10-31. System Status (AYK-10) (Sheet 1 of 6)

LINE	DESIGNATION	DESCRIPTION	REMARKS
1 thru 3	DIS	Disabled	Represented by a 0 for GO or a 1 for disabled, and displayed on lines 6 through 26 excluding line 10.
1 thru 3	DEF	Defective	Represented by a 0 for GO or a 1 for defective, and displayed on lines 6 through 26 excluding line 10.
1 thru 3	TD	Diagnostic test results	Not applicable to page 1 of SYSTEM STATUS Tableau.
4	Blank		
5	DISCOS	Display control subprogram	
6	TACCO	TACCO/DISCOS	
7	SENSO	SENSO/DISCOS	
8	CP	COTAC/DISCOS	
9	PL	Pilot/DISCOS	
10	DSPL	Display	
11	TACCO	TACCO/display	
12	SENSO	SENSO/display	
13	CP	COTAC/display	
14	PL	Pilot/display	
15	BLANK		
16	DMTU	Digital memory unit	
17	CP0	Central Processor 0	
18	CP1	Central Processor 1	
19	IOC0	Input output controller 0	
20	IOC1	Input output controller 1	
21	BLANK		
22	BLANK		
23	BLANK		
24	ARRAYS DISABLED		
25	BLANK	Number description (0 to 15) of defective arrays. Up to 10 may be displayed. Blank if no defects.	Cannot be reinitialized through SYSTEM STATUS.
26	BLANK	Number designation (0 to 15) of defective arrays. Up to 10 may be displayed. Blank if no defects.	Cannot be reinitialized through SYSTEM STATUS.

Figure 10-31. System Status (AYK-10) (Sheet 2)

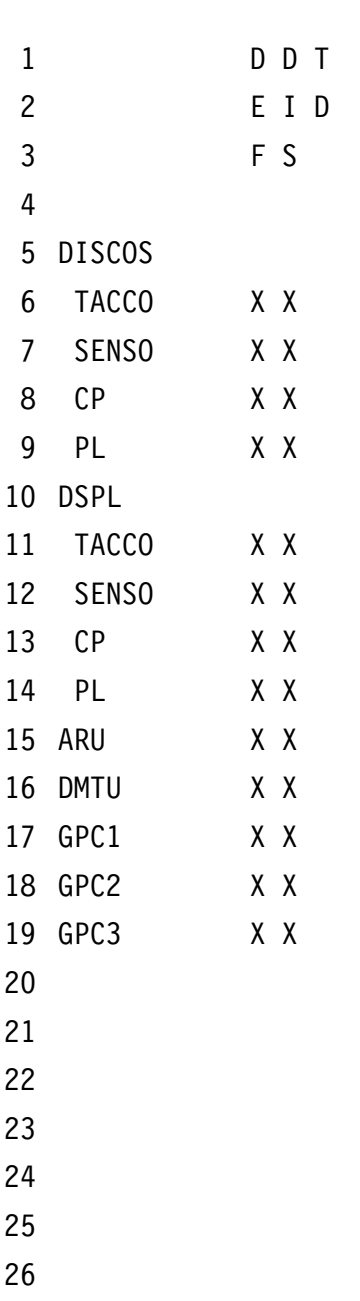

PURPOSE:

Inform the operator of the avionics system status. The SYSTEM STATUS Tableau maybe displayed through the SYSTEM STATUS function.

Figure 10-31. System Status (AYK-23) (Sheet 3)

LINE	DESIGNATION	DESCRIPTION	REMARKS
1 thru 3	DIS	Disabled	Represented by a 0 for GO or a 1 for disabled, and displayed on lines 6 through 26 excluding line 10.
1 thru 3	DEF	Defective	Represented by a 0 for GO or a 1 for defective, and displayed on lines 6 through 26 excluding line 10.
1 thru 3	TD	Diagnostic test results	Not applicable to page 1 of SYSTEM STATUS Tableau.
4	Blank		
5	DISCOS	Display control subprogram	
6	TACCO	TACCO/DISCOS	
7	SENSO	SENSO/DISCOS	
8	CP	COTAC/DISCOS	
9	PL	Pilot/DISCOS	
10	DSPL	Display	
11	TACCO	TACCO/display	
12	SENSO	SENSO/display	
13	CP	COTAC/display	
14	PL	Pilot/display	
15	BLANK		
16	DMTU	Digital memory unit	
17	GPC1	General Purpose Controller	Cannot be reinitialized through SYSTEM STATUS.
18	GPC2	General Purpose Controller	
19	GPC3	General Purpose Controller	
20	IOC1	Input output controller 1	
21	BLANK		
22	BLANK		
23	BLANK		
24	ARRAYS DISABLED		
25	BLANK	Number description (0 to 15) of defective arrays. Up to 10 may be displayed. Blank if no defects.	Cannot be reinitialized through SYSTEM STATUS.
26	BLANK	Number designation (0 to 15) of defective arrays. Up to 10 may be displayed. Blank if no defects.	Cannot be reinitialized through SYSTEM STATUS.

Figure 10-31. System Status (AYK-23) (Sheet 4)

SYSTEM STATUS

1		D	D	T
2		E	I	D
3		F	S	
4				
5	SCADC	X	X	
6				
7				
8				
9	NIU 1	X	X	
10	NIU 2	X	X	
11				
12				
13	SESCOS	X	X	
14	ARMCOS	X	X	
15	HACLCS5	X	X	
16	HACLCS6	X	X	
17				
18				
19	FLIR	X	X	
20				
21	RIU	X	X	X
22	ESM	X	X	X
23	CC	X	X	

Page 2 of 2

Figure 10-31. System Status (Sheet 5)

LINE	DESIGNATION	DESCRIPTION	REMARKS
1 thru 3	DEF	Defective	Represented by a 0 for GO or a 1 for defective, and displayed on lines 5 through 23.
1 thru 3	DIS	Disabled	Represented by a 0 for GO or a 1 for disabled, and displayed on lines 5 through 23.
1 thru 3	TD	Diagnostic test results	Represented by a 0 for GO or 1 for NO-GO, R for running, or blank when a test has not been run. TDs are available for RIU and ESM. These are displayed on lines 5 through 23.
4	Blank		
5	SCADC	Standard central air data computer	
6	Blank		
7	Blank		
8	Blank		
9	NIU 1	Navigation interface unit	Selection displays expanded SYSTEM STATUS Tableau.
10	NIU 2	Navigation interface unit	Selection displays expanded SYSTEM STATUS Tableau.
11	Blank		
12	Blank		
13	SESCOS	Search stores control subsystem	
14	ARMCOS	Armament control subsystem	
15	HACLCS 5	Harpoon control	
16	HACLCS 6	Harpoon control	
17	Blank		
18	Blank		
19	FLIR	Forward looking infrared	
20	Blank		
21	RIU	Radar interface unit	
22	ESM	Electronic support measures	
23	CC	Communications controller	If CC installed.

Figure 10-31. System Status (Sheet 6)

TRACK AMPLIFY

1	TN	XXXX
2	LOC	XXXX
3	LNK	XXXX XXXXX
4	NAME	XXXXXXXXXX
5	LAT	X XX XX.XXX
6	LON	XXXX XX.XXX
7	HDG	XXX
8	SPD	XXX.X
9	H-D	XXXXXXXXXX
10	TIME	XX XX XX
11	C-ID	XXXXXX YYY
12	L-R	XXX
13	ENGA	XXXXXXXXXX
14	CLAS	XXXXXXXXXX
15	AMPL	XXXXXXX
16	PRI	XXXXXXXXXX
17	TQ	XXX
18	MGT	XXXXXXXXXX
19	SENS	XXXXXXXXXX
20	DI	XXXX
21	MD1	XX
22	MD2	XXXX
23	RR	XXX
24	SHIP CLASS	XX YYYY

PURPOSE:

Inform the operator of detailed data concerning a track. The Track Amplify Tableau may be displayed through the AMPLFY function when a track symbol is hooked.

Figure 10-32. Track Amplify (Sheet 1 of 4)

LINE	DESIGNATION	DESCRIPTION	REMARKS
1	TN	Track number	XXXX represents: SPEC = Special intelligence source, or BLANK = Normal source.
2	LOC	Local track number	XXXX represents 200 thru 7776 (Octal), or BLANK= Remote track.
3	LNK	Data Link track number	XXXX represents 1 thru 76, 100 thru 176, 200 thru 7776 (OCTAL), or BLANK = Not on Link. XXXXX= The first and second characters are entered with alpha or numeric, and the third, fourth, and fifth characters are entered as numeric only.
4	NAME	Name, side number, or type of contact related to the track	
5	LAT	Latitude	X XX XX.XXX represents N 90 00.000 thru S 90 00.000.
6	LON	Longitude	XXXX XX.XXX represents E180 00.000 thru W180 00.000.
7	HDG	Heading of track	XXX represents 000 thru 359°.
8	SPD	Speed of track	XXX.X represents 000 thru 999.9 knots.
9	H-D	Height or depth	XXXXXXXXXX represents 0 thru 9,9999 feet (Remote tracks), or NO STATEMT= No statement for local tracks.
10	TIME	Time **Note** • If the track is local, the time displayed is of the most recent fix. • If the track is a real time remote track, the time displayed is time received. • If the track is not a non-real time remote track, the time displayed is time established. • If the track is a lost contact track, the time displayed is time designation was lost.	XX XX XX represents 00 00 00 thru 23 59 59.

Figure 10-32. Track Amplify (Sheet 2)

LINE	DESIGNATION	DESCRIPTION	REMARKS
11	C-ID	Category Identification	XXXX represents the following: FAIR = Friendly air FSURF = Friendly surface FSUB = Friendly sub HAIR = Hostile air HSURF = Hostile surface HSUB = Hostile sub UAIR = Unknown air USURF = Unknown surface USUB = Unknown sub. YYY represents LST = Lost contact or BLANK.
12	L-R	Local/Remote	XXX represents LOC = Local, or REM = Remote.
13	ENGA	Engagement status	XXXXXXXXXXX represents ENGAGED, NOT ENGAGED, ASSIGNED, or KILLED.
14	CLAS	Classification	XXXXXXXXXX represents the following: NO STATEMENT = No statement POSSIBLE = Possible sub PROBABLE = Probably sub NON SUB BLANK = Surface to Air.
15	AMPL	Amplify classification	XXXXXXX represents UNKNOWN, NON NUC, NUCLEAR, or Blank.
16	PRI	Primary identification	XXXXXXXXX represents the following: CONFIRMED = Confirmed for ID of friend or hostile AUXILIARY = Auxiliary for ID of friend SPCL MSSN = Special mission for ID of friend LINE = Line for ID of friend AMPHIBIOUS = Amphibious for ID of friend EVAL UNK = Evaluated unknown for ID of unknown ASSUMED FR = Assumed friend for ID of unknown ASSUMED H = Assumed hostile for ID of unknown BLANK = Subsurface.

Figure 10-32. Track Amplify (Sheet 3)

LINE	DESIGNATION	DESCRIPTION	REMARKS
17	TQ	Track quality	XXX represents the following: RT = Real time subsurface and surface local or remote tracks BLANK = Local air surface 0 thru 7 = Air and surface remote tracks NRT = Non-real time subsurface remote tracks.
18	MGT	Data Link management	XXXXXXXXXX represents the following: ASSOC = Link track is associated with another Link track EMERG = Emergency condition FORCE TELL = Force commander wants all units to receive this link track.
19	SENS	Sensor	XXXXXXXXXX represents the following: FLIR DESIG = TACCO designated VISUL = Visual RADAR ESM REM = Remote bearing contacts NO STATEMT = Different sensors types SOSUS HELO PAS HELO ACT SHIP SONAR.
20	DI	Discrete Identifier	XXXX represents 0000 through 7777 (OCTAL).
21	MD1	Mode 1	XX represents 00 through 73.
22	MD2	Mode 2	XXX represents 0000 thru 7777.
23	RR	Reporting responsibility	XXX represents 1 thru 76, or 100 thru 176 (PU or RU address of unit reporting this symbol).
24	SHIP CLASS	Country and classification	XX = Country. YYYY = Classification.

Figure 10-32. Track Amplify (Sheet 4)

TRACK MANAGEMENT

	TN-1	TYPE	TN-2
1	XXXX	YYYYY	ZZZZ
2	XXXX	YYYYY	ZZZZ
3	XXXX	YYYYY	ZZZZ
4	XXXX	YYYYY	ZZZZ
5	XXXX	YYYYY	ZZZZ
6	XXXX	YYYYY	ZZZZ
7	XXXX	YYYYY	ZZZZ
8	XXXX	YYYYY	ZZZZ
9	XXXX	YYYYY	ZZZZ
10	XXXX	YYYYY	ZZZZ
11	XXXX	YYYYY	ZZZZ
12	XXXX	YYYYY	ZZZZ
13	XXXX	YYYYY	ZZZZ
14	XXXX	YYYYY	ZZZZ
15	XXXX	YYYYY	ZZZZ
16	XXXX	YYYYY	ZZZZ
17	XXXX	YYYYY	ZZZZ
18	XXXX	YYYYY	ZZZZ
19	XXXX	YYYYY	ZZZZ
20	XXXX	YYYYY	ZZZZ
21	XXXX	YYYYY	ZZZZ
22	XXXX	YYYYY	ZZZZ

PURPOSE:

Provide the operator with all track alerts and track associations held in system data. The Track Management Tableau may be displayed through the TRACK MANAGE or INDEX function.

LINE	DESIGNATION	DESCRIPTION	REMARKS
1	TN-1	Track number 1	
	TYPE	Management function type	
	TN-2	Track number 2	
2–22	XXXX		XXXX represents 01 thru 76, 100 thru 176, or 200 thru 7776 (Octal).
	YYYYY		YYYYY represents the following: ASSN = Association EMERG = Emergency FORCE = Force tell.
	ZZZZ		ZZZZ represents 01 thru 76, 100 thru 176, 200 thru 7776 (Octal), or BLANK = Track alert type management function is involved.

Figure 10-33. Track Management

UHF CH-F ASSIGNMENT (UHF CH-F)

1	CH	FREQ	USE
2	1	XXX.XXX	YYYYY
3	2	XXX.XXX	YYYYY
4	3	XXX.XXX	YYYYY
5	4	XXX.XXX	YYYYY
6	5	XXX.XXX	YYYYY
7	6	XXX.XXX	YYYYY
8	7	XXX.XXX	YYYYY
9	8	XXX.XXX	YYYYY
10	9	XXX.XXX	YYYYY
11	10	XXX.XXX	YYYYY
12	11	XXX.XXX	YYYYY
13	12	XXX.XXX	YYYYY
14	13	XXX.XXX	YYYYY
15	14	XXX.XXX	YYYYY
16	15	XXX.XXX	YYYYY
17	16	XXX.XXX	YYYYY
18	17	XXX.XXX	YYYYY
19	18	XXX.XXX	YYYYY
20	19	XXX.XXX	YYYYY
21	20	XXX.XXX	YYYYY
22	21	XXX.XXX	ZZZZZ
23	22	XXX.XXX	ZZZZZ

PURPOSE:

Inform the operator of the frequency assignment for each UHF radio channel. The UHF CH-F ASSIGNMENT Tableau may be displayed through the INDEX function.

Note

Aircraft configured with the CCG have two additional UHF radio channels. The UHF CH-F Tableau updates automatically to reflect current configuration.

Figure 10-34. UHF CH-F Assignment (UHF CH-F) (Sheet 1 of 2)

LINE	DESIGNATION	DESCRIPTION	REMARKS
1	CH	Channel	
	FREQ	Frequency	
	USE	Use of the Channel	
2 thru 21	1 thru 20		Channel number.
	XXX.XXX	Frequency	XXX.XXX represents 225.000 through 399.950 MHz.
	YYYYY	USN abbreviations and designations	
22	21	Channel number	
	XXX.XXX	Frequency	XXX.XXX represents 225.000 through 399.950 MHz.
23	22	Channel number	
	XXX.XXX	Frequency	XXX.XXX represents 225.000 through 399.950 MHz.
	ZZZZZ		ZZZZZ represents GUARD.

Figure 10-34. UHF CH-F Assignment (UHF CH-F) (Sheet 2)

INDEX

Page No.

A

A-SCAN SHIFT option 6-68
A/B SCAN option 6-63
A/C TRACK 1-78, 2-76
A/C TRK (aircraft track) 4-26
ACK CNTCT 1-65, 2-63
ACK ORDER (acknowledge order) 5-5
  Option 5-19
Acoustic system 7-1
ACQ TGT option 6-11
ADV 1-56, 2-54
Advanced missile interface box 3-52
Advisory alerts 1-37, 2-35, 9-1
AGM-65 Maverick missile 3-49
AGM-65E laser Maverick 3-50
AGM-65F infrared (IR) Maverick 3-50
AGM-84 standoff land attack missile - expanded response 3-51
AIR TRK option 1-90, 2-88
Airborne:
  Playback 6-28
  Recording 6-28
Aircraft 1-37, 2-35
  Own track history 1-44, 2-42
Alerts 1-34, 2-33
  Advisory 1-37, 2-35, 9-1
  Executive (AYK-10 only) 9-1
  Executive program 1-35
  Function 1-36, 2-34, 9-2
  Keyset 1-35, 2-34, 9-2
  Loader 1-36, 2-35, 9-1
  Recovery 1-37, 2-35, 9-2
  System 1-35, 2-33, 9-1
Alternate action 1-53, 2-51
AMIB/Maverick Plus System initialization 3-52
AMPLFY 1-68, 2-66
AN/ALR-76 ESM 6-76
AN/AWW-13 advanced weapon data link (AWDL) pod 3-52
AN/USH-42 mission recorder/reproducer set 6-17
  AN/USH-42 recorder/reproducer electronics units 6-19
  AN/USH-42 remote control and advisory panel 6-17
  Procedures 6-26
  Video switch assembly 6-26
ANT CONT option 6-69
Antenna, AS-3637/APS-137 6-36
APS-137(V) radar system 6-31
  AS-3637/APS-137 antenna 6-36
  B-scan autotrack window 6-45
  C-11229/APS-137(V) off-line control unit 6-40
  CV11164/APS-137 radar interface unit 6-33
  CV-3744/APS-137 signal data converter . . . 6-37
  Hardware introduction 6-31
  Introduction 6-31
  Modes of operation 6-41
  Peripheral equipment 6-41
  Peripheral readouts 6-42
  PP-7813/APS-137 programmer/power supply 6-38
  R-2231/APS-137 receiver pulse compressor 6-35
  Radar display formats 6-42
  Radar operation 6-47
  RDR A matrix 6-51
  RDR B matrix 6-65
  Single target automatic tracking 6-45
  SN-546/APS-137 synchronizer/exciter 6-35
  T-1203/APS-116 transmitter 6-35
  Target designator and hook symbol 6-42
  Test pattern displays 6-47
AREA SEARCH option 1-94, 2-92
Area search symbol 1-38, 2-36
ARM/ORD option 1-114, 2-111
Armament:
  Control display navigation unit 3-53
  Control system 3-29
  System 3-1

	Page No.
Armament control panel	3-32
STATION SELECT switches	3-32
Weapons load indicators	3-37
Armament control subprogram interface	3-68
Weapon selection	3-68
Array, global memory	2-1
AS-3637/APS-137 antenna	6-36
Assem report (assemble report)	5-5
Option	5-24
Assembly:	
Sensor/turret	6-1
Video switch	6-26
ASW search center	1-46, 2-44
ASW SUMRY (ASW summary)	5-4
Option	5-14
AUTO SCALE	1-80, 2-78
Auto trk option	6-10, 6-66
AWW-13 datalink pod (DL-13) pages	3-56

B

BACK SPACE	1-59, 2-57
Basic:	
Contact	1-42, 2-40
Fix	1-44, 2-42
BOMB	3-91
Option	3-95
Bomb bay:	
Heat caution lights	3-32
Racks	3-27
Bomb bay doors	3-25
Ground control panel	3-26
Bomb bay stations	3-25
TORP PRESET SWITCH	3-25
Box, advanced missile interface	3-52
BRT/CNTRST option	6-15
B-scan autotrack window	6-45
Built-in test equipment	1-52, 2-45

C

C-11229/APS-137(V) off-line control unit	6-40
CAPACITY EXCD (capacity exceeded)	1-36, 2-34
CAPACITY LIMIT	1-36, 2-34
Cassette tape removal	6-30
CDNU geographic correct	4-15
Central processor	1-5
Classification aids cursor	1-38, 2-36
CLEAR ALERT	1-78, 2-76
CLR alert	1-55, 2-53
CLR PT DATA	1-56, 2-54
CLR TAC PLOT	1-65, 2-63
CLSTR BOMB (cluster bomb)	3-91
Option	3-100
CMPT INTSCT option	1-104, 2-102
Cockpit preflight check	6-26
COMM option	1-114, 2-112
Communications controller	5-1
Components:	
Maverick plus system armament and	3-49
System	5-1, 6-1
Computer:	
General purpose digital	1-1, 2-1
Intersection — fix dissimilar sources	1-43, 2-41
Conditioner, power	2-3
Contact:	
ESM	1-42, 2-41
ESM threat	1-43, 2-41
Basic	1-42, 2-40
Lost	1-40, 2-39
CONTIN PRED option	1-102, 2-100
CONTIN SCAN option	6-54
Continuous predict	1-43, 2-41
Control(s):	
COTAC display	1-74, 2-72
Display off-line	1-11, 2-15
Kill stores off-line	3-29
Kill stores on-line	3-66
Pilot display	1-77, 2-75
Rack lock	3-27
Search stores	3-4
Search stores on-line	3-8
And servo electronics unit	6-1
TACCO/SENSO display	1-63, 2-61
Unit	3-108
Wing station rack lock	3-29

Page No.

Control functions 5-3
Off-line controls and indicators 5-3
On-line controls and indicators 5-4
Control panel:
Armament 3-32
Bomb bay doors ground 3-26
Power 1-23, 2-15
Controller:
Communications 5-1
Enhanced general purpose 2-1
General purpose 2-1
Input/output 1-5
COOL option 6-5
COTAC:
Display control 1-74, 2-72
Matrix select switches 1-54, 2-52
MPD 1-11, 1-50, 2-9, 2-45
CP failure 1-29
Cues 1-33, 2-31
Data entry 1-33, 2-32, 8-1
Decision 1-34, 2-32, 8-1
Function activation 1-34, 2-33, 8-1
Loader 1-34, 2-33, 8-1
Cursor, classification aids 1-38, 2-36
CV 1-41, 2-39
CV11164/APS-137 radar interface unit 6-33
CV-3744/APS-137 signal data converter 6-37

D

Data:
Entry cues 1-33, 2-32, 8-1
Exchange 5-3
Extraction and safe data 1-31, 2-29
Terminal set 5-1
Data link system configuration 5-25
Latitude/longitude filter (LAT/LONG/filter) 5-28
Link setup procedure 5-25
Own aircraft (OAC filter) 5-28
Data link system, model IV 5-1
Control functions 5-3
Data exchange 5-3
Introduction 5-1
System components 5-1
Data processing — AYK-10 1-1
Digital memory unit/transportable cartridge 1-5
General purpose digital computer 1-1
Introduction 1-1
Data processing — AYK-23 2-1
Digital memory unit/transportable cartridge 2-4
General purpose digital computer 2-1
Introduction 2-1
Data processing option select functions 1-81, 2-79
DATUM option 2-90
PILOT DSPL matrix 1-110, 2-108
PRGM CONT matrix 1-82, 2-79
PTA/CON PTA matrix 1-112, 2-110
REDSPL matrix 1-88, 2-85
REINIT matrix 1-113, 2-111
SEARCH MODE matrix 1-91, 2-89
SONO CONT matrix 1-110, 2-108
TAC AIDS matrix 1-95, 2-93
Data slnce (data silence) 5-5
Option 5-19
Datum (local or remote) 1-40, 2-38
DATUM option 1-92, 2-90
AREA SEARCH option 2-92
Decision cues 1-34, 2-32, 8-1
DECR SCALE 1-60, 1-81, 2-59, 2-79
Degradation, program 1-30
Description, steering 4-27
Destruct point 1-38, 2-37
DIA/ORT matrix 1-116, 2-114
ESM DIAG option 2-116
ESM ORT option 2-118
RADAR DIAGNOSTIC option 2-114
RADAR ORT option 2-117
DICASS option 3-15
DIFAR option 3-12
Digital data set 3-53
Digital memory unit/transportable cartridge 1-5, 2-4
DMTU power-on self-test 1-5, 2-4

Page No.

Directional:
Command activated sonobuoy system (DICASS) . . . 3-9
Frequency analysis and recording (DIFAR) . . . 3-9
Dispenser:
Housings and modules . . . 3-117
Safety switch . . . 3-117
Display(s) . . . 1-10, 2-9, 6-3
Control switches . . . 1-54, 2-52
COTAC MPD . . . 1-11, 2-9
Interrogator . . . 6-75
MPS tactical . . . 3-66
Off-line controls . . . 1-11, 2-15
Pilot . . . 1-10, 1-46, 2-9, 2-45
SENSO MPD . . . 1-11, 2-9
TACCO MPD . . . 1-11, 2-9
Tactical plot . . . 1-46
Test pattern . . . 6-47
Display control functions . . . 1-63, 2-61
COTAC display control . . . 1-74, 2-72
Pilot display control . . . 1-77, 2-75
TACCO/SENSO display control . . . 1-63, 2-61
Display symbology . . . 1-37, 2-35
Aircraft . . . 1-37, 2-35
Aircraft own track history . . . 1-44, 2-42
Area search symbol . . . 1-38, 2-36
ASW search center . . . 1-46, 2-44
Basic contact . . . 1-42, 2-40
Basic fix . . . 1-44, 2-42
Classification aids cursor . . . 1-38, 2-36
Computer intersection — fix dissimilar sources . . . 1-43, 2-41
Continuous predict . . . 1-43, 2-41
CV . . . 1-41, 2-39
Datum (local or remote) . . . 1-40, 2-38
Destruct point . . . 1-38, 2-37
Distressed vessel (local or remote) . . . 1-41, 2-39
Downed aircraft (local or remote) . . . 1-41, 2-39
Enable point . . . 1-38, 2-37
ESM bearing sector inhibit . . . 1-42, 2-40
ESM contact . . . 1-42, 2-41
ESM emitter . . . 1-42, 2-41
ESM threat contact . . . 1-43, 2-41

Page No.

ESM/ESM computed intersection fix . . . 1-42, 2-41
Fix history . . . 1-45, 2-42
Fly-to-point . . . 1-37, 2-36
Harpoon aim point . . . 1-39, 2-37
Harpoon destruct point envelope . . . 1-39, 2-38
Harpoon DTOT display symbology . . . 1-40, 2-38
Harpoon release envelope — BOL mode with no waypoint selected . . . 1-39, 2-38
Harpoon release envelope — RBL mode with no waypoint selected . . . 1-39, 2-38
Harpoon release envelope — waypoint selected . . . 1-39, 2-38
Harpoon waypoint . . . 1-39, 2-37
Harpoon waypoint envelope — BOL mode . . . 1-39, 2-37
Harpoon waypoint envelope — RBL mode . . . 1-39, 2-37
Hook . . . 1-37, 2-35
Latitude/longitude . . . 1-46, 2-44
Latitude/longitude (grid coordinate reference) . . . 1-46, 2-44
Lost contact . . . 1-40, 2-39
Man-in-water (local or remote) or PU emergency bailout . . . 1-41, 2-40
Nonsub (local or remote) . . . 1-41, 2-39
On top . . . 1-40, 2-38
Participating unit . . . 1-46, 2-44
Probability contour . . . 1-45, 2-44
Radar detect symbol . . . 1-38, 2-36
Range radius circle . . . 1-45, 2-44
Reference mark . . . 1-38, 2-36
Remote weapon splash point . . . 1-41, 2-40
Return to base (PU emergency) . . . 1-42, 2-40
Single predict . . . 1-43, 2-42
Smoke . . . 1-37, 2-36
Sonobuoy . . . 1-37, 2-35
Sonobuoy contact bearing . . . 1-45, 2-42
Sound underwater signal . . . 1-37, 2-36
Vector . . . 1-45, 2-43
Weapon splash point . . . 1-38, 2-36
Distressed vessel (local or remote) . . . 1-41, 2-39
DMTU power-on self-test . . . 1-5, 2-4
Doors, bomb bay . . . 3-25
Downed aircraft (local or remote) . . . 1-41, 2-39
DPOSIT SYMBOL . . . 1-69, 2-68

Page No.

DSPL IMAGE option 6-62
DSPL option 1-113, 2-111, 6-12
DSPL PPI option 6-52
DSTRY DATA 1-67, 2-65

E

ECM:
- Initiate panel 3-115
- Programmer 3-111
- Safety disable toggle switch 3-117

Electronic countermeasures system 3-107
- Control unit 3-108
- Dispenser housings and modules 3-117
- Dispenser safety switch 3-117
- ECM initiate panel 3-115
- ECM programmer 3-111
- ECN safety disable toggle switch 3-117
- Sequencing switches 3-117
- System operation 3-107
- Trigger pulse amplifier 3-117

Electronic support measures system 6-75
- AN/ALR-76 ESM 6-76

Emergency jettison 3-40
- Switch 3-29

EMI filter 2-3
Enable point 1-38, 2-37
END MSN option 1-87, 2-84
Engage status 5-5
- Option 5-23

Enhanced general purpose controller 2-1
Enter 1-53, 2-49
ENTER FIX option 6-16, 6-64
ENTER FTP 1-72, 2-70
ENTER FTP (enter fly-to-point) 4-23
Entry:
- Invalid 1-36, 2-34
- Numeric 1-61

Equipment:
- Built-in test 1-52, 2-45
- Peripheral 6-41

ERASE option 6-55
Error analysis 3-91
ESM:
- Bearing sector inhibit 1-42, 2-40
- Contact 1-42, 2-41
- Emitter 1-42, 2-41
- Option 1-115, 2-112
- Threat contact 1-43, 2-41

ESM CNTCT option 1-88, 2-86
ESM DIAG option 1-119, 2-116
ESM ORT option 1-121, 2-118
ESM T 1-79, 2-77
ESM/ESM computed intersection fix 1-42, 2-41
Executive:
- Alerts (AYK-10 only) 9-1
- Program alerts 1-35

EXPAND CIR 1-71, 2-69
EXPAND option 6-67
Expendable FTP 4-31
EXTEND option 6-6
EXTEND TRACK VECTOR 1-79, 2-77

F

Failure(s):
- CP 1-29
- IOC 1-29
- GPDC memory system 1-29

FAR ON CIRCLE option 1-92, 2-89
Faults:
- IOC 1-27
- Memory 1-28
- Program loading 1-26, 2-28

Filter, EMI 2-3
FIX DESIG option 1-99, 2-96
Fix history 1-45, 2-42
FIX HISTRY option 1-103, 2-101
FLIR:
- Option 1-116, 2-113
- Reinitialization 6-17

FLIR matrix 6-5
- ACQ TGT option 6-11
- AUTO TRK option 6-10
- BRT/CNTRST option 6-15
- COOL option 6-5
- DSPL option 6-12
- ENTER FIX option 6-16
- EXTEND option 6-6
- NAR FIELD option 6-14

Page No.

NEG IMAGE option 6-9
SRCH/ALGN option 6-7
FLIR system 6-1
AN/USH-42 mission recorder/ reproducer set 6-17
Display 6-3
FLIR matrix 6-5
FLIR reinitialization 6-17
Introduction 6-1
Off-line controls and indicators 6-1
On-line control functions 6-5
System components 6-1
Fly-to-point 1-37, 2-36, 4-27
FREEZE option 6-64
FTP:
Expendable 4-31
Intercept 4-32
Monitor 4-32
Normal 4-32
Orbital 4-32
Utilization and computer implementation . . . 4-31
Weapon 4-31
Function(s):
Activation cues 1-34, 2-33, 8-1
Alerts 1-36, 2-34, 9-2
Control 5-3
Display control 1-63, 2-61
Keyset 1-54, 2-52
KILL STORES control 3-91
On-line control 5-4, 6-5
Search stores control 3-8
TAC NAV matrix 4-23

G

Gate 4-28
GEN TRK option 1-101, 2-99
Single fix 1-102, 2-99
General purpose controller 2-1
General purpose digital computer 1-1, 2-1
Central processor 1-5
EMI filter 2-3
Enhanced general purpose controller 2-1
General purpose controller 2-1
Global memory array 2-1

Page No.

Harpoon input/output 2-3
Input/output controller 1-5
Input/output interface 1-5
Left connector interface card 2-4
Logic back plane 2-3
Main memory 1-5
Maintenance interface module 2-3
Manchester input/output 2-3
Power back plane 2-4
Power conditioner 2-3
Power regulator 2-3
Serial input/output 2-3
Generator:
Universal display 1-8, 2-8
Global memory array 2-1
GPDC memory system failures 1-29
GPS MARK TIME option 4-22
Great circle steering 4-28
GRID LOCK option 5-11
Gridlock 5-4
Ground:
Playback 6-29
Recording 6-29

H

Hardware introduction 6-31
Harpoon:
Aim point 1-39, 2-37
Destruct point envelope 1-39, 2-38
DTOT display symbology 1-40, 2-38
Input/output 2-3
LOS launch procedures 3-46
Release envelope — BOL mode with no waypoint selected 1-39, 2-38
Release envelope — RBL mode with no waypoint selected 1-39, 2-38
Release envelope — waypoint selected 1-39, 2-38
Waypoint 1-39, 2-37
Waypoint envelope — BOL mode 1-39, 2-37
Waypoint envelope — RBL mode 1-39, 2-37
Hook 1-37, 2-35
Table and display buffer 1-32, 2-31
Verify 1-53, 2-49
HRPN MSL SIM (harpoon missile simulator) 3-91
Option 3-104

Page No.

I

IFF controls and indicators 6-75
IFF ONLY option 6-71
IFF, SIF option 5-10
IFF/SIF (identification friend or foe/ selective identification feature) 5-5
Image mode 6-42
INCOS switch actions 1-53, 2-51
  Alternate action 1-53, 2-51
  Momentary action 1-53, 2-51
  Single action 1-53, 2-51
INCOS switch types 1-53, 2-51
  COTAC matrix select switches 1-54, 2-52
  Display control switches 1-54, 2-52
  Keyset switches 1-54, 2-52
  Matrix select switches 1-53, 2-51
  Option select switches 1-54, 2-52
  TACCO/SENSO matrix select switches 1-54, 2-52
INCR SCALE 1-59, 1-79, 2-57, 2-77
INDEX 1-55, 2-53
Index page 3-64
Indicator(s):
  Radio set control 5-1
  IFF controls and 6-75
  Off-line controls and 5-3, 6-1
  On-line controls and 5-4
  SRX power control and SAU temperature . . . 7-1
  Steering command 4-32
  Weapons load 3-37
In-flight:
  Performance monitoring 1-31, 2-30
  Troubleshooting 9-2
Inhibt remote 5-5
  Option 5-21
Initialization 1-25, 2-27
Input/output:
  Controller 1-5
  Interface 1-5
  Manchester 2-3
  Serial 2-3
INSERT DATA option 1-84, 2-82

Page No.

INSERT SONB (insert sonobuoy) 4-23
  Option 4-24
INTCPT FTP option 1-109, 2-107
Integrated control system 1-52, 2-45
  Built-in test equipment 1-52, 2-45
  Display control functions 1-63, 2-61
  INCOS switch actions 1-53, 2-51
  INCOS switch types 1-53, 2-51
  Introduction 1-52, 2-45
  Keyset functions 1-54, 2-52
  Switch lighting conventions 1-53, 2-49
  Trackball, hook verify, and enter 1-52, 2-49
Intercept FTP 4-32
Interface:
  Input/output 1-5
  System 5-3
Interrogator:
  Displays 6-75
  Equipment 6-73
Interrogator set 6-73
  IFF controls and indicators 6-75
  Interrogator displays 6-75
  Interrogator equipment 6-73
INVALID ENTRY 1-36, 2-34
IOC:
  Failure 1-29
  Faults 1-27
ISAR STAE option 6-71

J

Jettison:
  Emergency 3-40
  Search stores emergency 3-6
  Selective 3-40

K

Keyset alerts 1-35, 2-34, 9-2
  CAPACITY EXCD (capacity exceeded) 1-36, 2-34
  CAPACITY LIMIT 1-36, 2-34
  INVALID ENTRY 1-36, 2-34
  NO HOOK VERIFY 1-36, 2-34
  NOT AVAIL (not available) 1-36, 2-34
  REPOSITION HOOK 1-36, 2-34

Page No.

Keyset functions 1-54, 2-52
Normal mode 1-54, 2-52
TACCO/SENSO alphanumeric mode 1-61, 2-59
Keyset switches 1-54, 2-52
KG-40A secure data keyer 5-2
Kill stores 3-24, 3-106
Armament control system 3-29
Bomb bay doors 3-25
Bomb bay racks 3-27
Bomb bay stations 3-25
Introduction 3-24
Wing racks 3-27
Wing stations 3-27
KILL STORES control functions 3-91
BOMB 3-91
CLSTR BOMB (cluster bomb) 3-91
HRPN MSL SIM (harpoon missile simulator) 3-91
KILL STORES matrix 3-91
MINE 3-91
MSL (missile) 3-91
PRACT BOMB (practice bomb) 3-91
RLSE (release) 3-91
SUS (sound underwater signal) 3-91
TORP (torpedo) 3-91
WPN FTP (weapon fly-to-point) 3-91
KILL STORES matrix 3-91
TORP option 3-92
KILL STORES off-line control 3-29
Armament control panel 3-32
Bomb bay heat caution lights 3-32
Emergency jettison switch 3-29
Master arm cue light 3-29
MASTER ARM switch 3-29
STORES switch 3-29
Trigger switch 3-32
KILL STORES on-line control 3-66
Armament control subprogram interface 3-68

L

Latitude/longitude 1-46, 2-44
Grid coordinate reference 1-46, 2-44
Latitude/longitude filter (LAT/LONG/filter) 5-28
Launcher chutes 3-1
Left connector interface card 2-4
Light(s):
Bomb bay heat caution 3-32
Master arm cue 3-29
LINK CONT matrix 5-4, 5-5
ASW SUMRY (ASW summary) 5-4
ASW SUMRY option 5-14
GRID LOCK option 5-11
GRIDLOCK 5-4
IFF, SIF option 5-10
IFF/SIF (identification friend or foe/selective identification feature) 5-5
LINK PRMTR (link parameter) 5-4
LINK PRMTR option 5-6
NET ACTIVE 5-4
NET ACTIVE option 5-17
SONB STATUS (sonobuoy status) 5-5, 5-17
TRACK MANAGE 5-4
TRACK MANAGE option 5-12
LINK OPER matrix 5-5, 5-18
ACK ORDER (acknowledge order) 5-5
ACK ORDER option 5-19
ASSEM REPORT (assemble report) 5-5
ASSEM REPORT option 5-24
DATA SLNCE (data silence) 5-5
DATA SLNCE option 5-19
ENGAGE STATUS 5-5
ENGAGE STATUS option 5-23
INHIBT REMOTE 5-5
INHIBT REMOTE option 5-21
OWN EMER (own emergency) 5-5
OWN EMER option 5-21
SHORT BC (short broadcast) 5-5
SHORT BC option 5-18
SPCL POINT (special point) 5-5
SPCL POINT option 5-20
TN AMPLFY (Track number amplify) 5-5
TN AMPLIFY option 5-23
TN CALL (track number call) 5-5
TN CALL option 5-22
LINK PRMTR (link parameter) 5-4
Option 5-6

Page No.

Link setup procedure 5-25
Load procedures, normal 1-23, 2-15
Loader:
  Alerts 1-36, 2-35, 9-1
  Cues 1-34, 2-33, 8-1
LOFAR option 3-10
Logic back plane 2-3
Lost contact 1-40, 2-39
Low frequency analysis and recording (LOFAR) 3-9

M

MAD option 1-116, 2-113
MAD/RDR RANGE 1-69, 2-67
Main memory 1-5
Maintenance interface module 2-3
Manchester input/output 2-3
Man-in-water (local or remote) or PU emergency bailout 1-41, 2-40
Manual entry mark time option 4-22
Manual steering 4-32
Master arm cue light 3-29
MASTER ARM switch 3-29
Matrix:
  DIA/ORT 1-116, 2-114
  FLIR 6-5
  GEO NAV 4-8
  KILL STORES 3-91
  LINK CONT 5-4, 5-5
  LINK OPER 5-5, 5-18
  PILOT DSPL 1-110, 2-108
  PRGM CONT 1-82, 2-79
  PTA/CON PTA 1-112, 2-110
  RDR A 6-51
  RDR B 6-65
  REDSPL 1-88
  REINIT 1-113
  SEARCH MODE 1-91
  SEARCH STORES 3-9
  SONO CONT 1-110, 2-108
  TAC AIDS 1-95
  TAC NAV 4-23
Matrix select switches 1-53, 2-51
Maverick pages 3-56

Page No.

Maverick Plus System 3-46
  Armament and components 3-49
  Introduction 3-46
Maverick Plus System armament and components 3-49
  AGM-65 Maverick missile 3-49
  AGM-84 Standoff Land Attack Missile – Expanded response 3-51
  AN/AWW-13 Advanced Weapon Data Link (AWDL) pod 3-52
  Armament Control Display Navigation Unit 3-53
  Digital data set 3-53
  Missile controller 3-53
Memory:
  Faults 1-28
  Main 1-5
MIDCOURSE UPDATE option 6-72
MIN SCAN option 6-63
MINE 3-91
  Option 3-96
Missile:
  Controller 3-53
  Simulation 3-46
Mode(s):
  Harpoon waypoint envelope — BOL 1-39, 2-37
  Harpoon waypoint envelope — RBL 1-39, 2-37
  Image 6-42
  Navigation/weather avoidance 6-41
  Normal 1-54, 2-52
  Operational program degraded 1-28, 2-29
  Periscope 6-41
  Surface search 6-42
  TACCO/SENSO alphanumeric 1-61, 2-59
Modes of operation 6-41
  Image mode 6-42
  Navigation/weather avoidance mode 6-41
  Periscope mode 6-41
  Surface search mode 6-42
MODIFY CAT/ID (modify category/ID) option 1-96, 2-93
Module(s):
  Dispenser housings and 3-117
  Maintenance interface 2-3

Page No.

Momentary action 1-53, 2-51
Monitor FTP 4-32
Monitoring, in-flight performance 1-31, 2-30
MPD:
  COTAC 1-11, 1-50, 2-9, 2-45
  SENSO 1-11, 2-9
  TACCO 1-11, 2-9
  TACCO/SENSO 1-52, 2-45
MPS:
  Initialization 3-53
  Tactical displays 3-66
MSL (missile) 3-91
  Option 3-104

N

NAR FIELD option 6-14
NAV option 1-114, 2-112
NAVIGATION 4-1
  A/C TRK (aircraft track) 4-7, 4-23
  A/C TRK (aircraft track) option 4-14
  Altitude 4-5
  CV POSN (aircraft carrier position) 4-8
  CV POSN (aircraft carrier position) option 4-13
  DR DEF (dead reckoning defect) alert 4-2
  GEO CORR (geographic correct) 4-8
  GEO CORR (geographic correct) option 4-15
  GEO NAV functions 4-7
  GEO NAV matrix 4-8
  Geographic position 4-7
  Grid coord (grid coordinate) 4-7
  Grid coord (grid coordinates) option 4-12
  Groundspeed computation 4-4
  Heading selection 4-3
  Initial position 4-6
  INSERT L/L (insert latitude and longitude) 4-8
  INSERT L/L (insert latitude and longitude) option 4-10
  Introduction 4-1
  Magnetic variation 4-4
  Mark time 4-8
  Mark time option 4-22
  Navigation commencement 4-7
  Navigation data link position 4-7
  Navigation system checks 4-7
  ON TOP option 4-23
  Pitch and roll 4-3
  Position keeping 4-6
  READ L/L (read latitude and longitude) 4-7
  READ L/L (read latitude and longitude) option 4-10
  Source selection criteria 4-1
  System drift 4-6
  True track and drift angle 4-4
  Velocity defects 4-2
  Vertical velocity 4-4
  Windspeed and direction 4-5
Navigation/weather avoidance mode 6-41
Neg image option 6-9
NET ACTIVE 5-4
  Option 5-17
NO HOOK VERIFY 1-36, 2-34
Nonsub (local or remote) 1-41, 2-39
Normal:
  FTP 4-32
  Load procedures 1-23, 2-15
  Mode 1-54, 2-52
NOT AVAIL (not available) 1-36, 2-34
NUMERIC ENTRY 1-61, 2-59

O

Off-line controls and indicators 5-3, 6-1
On top 1-40, 2-38
ON TOP geographic correct 4-16
On-line control functions 5-4, 6-5
  LINK CONT matrix 5-4
  LINK OPER matrix 5-5
On-line controls and indicators 5-4
Operation:
  Modes of 6-41
  Radar 6-47
  Search stores manual mode 3-4
  System 3-107
Operational:
  Continue reload 1-28, 2-28
  Readiness tests 1-116, 2-114
Operational program degraded modes 1-28, 2-29

Page No.

CP failure 1-29
GPDC memory system failures 1-29
IOC failure 1-29
Operational program loading 1-23, 2-15
Data extraction and safe data 1-31, 2-29
Hook table and display buffer 1-32, 2-31
In-flight performance monitoring 1-31, 2-30
Initialization 1-25, 2-27
Normal load procedures 1-23, 2-15
Operational continue reload 1-28, 2-28
Operational program degraded modes 1-28, 2-29
Power transients 1-31, 2-29
Program degradation 1-30
Program loading faults 1-26, 2-28
Program/avionics shutdown 1-30, 2-29
Option:
A-SCAN SHIFT 6-68
A/B SCAN 6-63
ACK ORDER 5-19
ACQ TGT 6-11
AIR TRK 1-90, 2-88
ANT CONT 6-69
AREA SEARCH 1-94, 2-92
ARM/ORD 1-114, 2-111
ASSEM REPORT 5-24
ASW SUMRY 5-14
AUTO TRK 6-10, 6-66
BOMB 3-91
BRT/CNTRST 6-15
CLSTR BOMB 3-91
CMPT INTSCT 1-104, 2-101
COMM 1-114, 2-112
CONTIN PRED 1-102, 2-100
CONTIN SCAN 6-54
COOL 6-5
DATA SLNCE 5-19
DATUM 1-92, 2-90
DICASS 3-15
DIFAR 3-12
DSPL IMAGE 6-62
DSPL 1-113, 2-111, 6-12
DSPL PPI 6-52
END MSN 1-87, 2-84

Page No.

ENGAGE STATUS 5-23
ENTER FIX 6-16, 6-64
ERASE 6-55
ESM 1-115, 2-112
ESM CNTCT 1-88, 2-86
ESM DIAG 1-119, 2-116
ESM ORT 1-121, 2-118
EXPAND 6-67
EXTEND 6-6
FAR ON CIRCLE 1-92, 2-89
FIX DESIG 1-99, 2-96
FIX HISTRY 1-103, 2-101
FLIR 1-116, 2-113
FREEZE 6-64
GEN TRK 1-101, 2-99
GPS MARK TIME 4-44
GRID LOCK 5-11
HRPN MSL SIM 3-104
IFF ONLY 6-71
IFF, SIF 5-10
INHIBT REMOTE 5-21
INSERT DATA 1-84, 2-82
INSERT SONB 4-24
INTCPT FTP 1-109, 2-107
ISAR STAE 6-71
LINK PRMTR 5-6
LOFAR 3-10
MAD 1-116, 2-113
MANUAL ENTRY MARK TIME 4-22
MIDCOURSE UPDATE 6-72
MIN SCAN 6-63
MODIFY CAT/ID 1-96, 2-93
MSL 3-104
NAR FIELD 6-14
NAV 1-114, 2-112
NEG IMAGE 6-9
NET ACTIVE 5-17
OWN EMER 5-21
PILOT RCNTR 1-111, 2-109
PRACT BOMB 3-98
PRGM STATUS 1-82, 2-80
PROB CONTOR 1-107, 2-105
RADAR 1-114, 2-112
RADAR DIAGNOSTIC 1-117, 2-114
RADAR ORT 1-119, 2-117

Page No.

RADAR TRK 1-89, 2-86
REINIT SYSTEM 1-84, 2-81
REMOTE 1-90, 2-88
REPOSN CURSOR 6-68
RLOAD PRGM 1-83, 2-80
RLSE 3-23, 3-105
SECRET LOCK 1-85, 2-82
SEL MODE 6-53
Select switches 1-54, 2-52
SET PRMTR 6-56
SHORT BC 5-18
SINGLE PRED 1-108, 2-106
SMOKE 3-17
SONB PATT 3-14
SPCL PATT 1-112, 2-109
SPCL POINT 5-20
SRCH/ALGN 6-7
STR LOAD 3-21
SUB TRK 1-89, 2-87
SUR TRK 1-90, 2-87
SUS 3-104
SYSTEM STATUS 1-85, 2-83
TGT AIDS 3-106
TN AMPLFY 5-23
TN CALL 5-22
TORP 3-92
TRACK MANAGE 5-12
VLAD 3-18
WPN FTP 3-102
XFR ITEM 1-111, 2-109
ORBIT option 1-109, 2-107
Orbital:
Capture 4-29
FTP 4-32
Own aircraft (OAC filter) 5-28
OWN EMER (own emergency) 5-5
Option 5-21

P

Panel:
AN/USH-42 remote control and advisory . . . 6-17
Armament control 3-32
Bomb bay doors ground control 3-26
ECM initiate 3-115
Power control 1-23, 2-15
Sonobuoy monitor 7-1
Participating unit 1-46, 2-44
Peripheral:
Equipment 6-41
Readouts 6-42
Periscope mode 6-41
Pilot display 1-10, 1-46, 2-9, 2-45
Control 1-77, 2-75
PILOT DSPL matrix 1-110, 2-108
PILOT RCNTR option 1-111, 2-109
SPCL PATT option 1-112, 2-109
XFR ITEM option 1-111, 2-109
PILOT RCNTR option 1-111, 2-109
Playback:
Airborne 6-28
Ground 6-29
Point-to-point:
Designated steering 4-29
Steering 4-29
Power:
Back plane 2-4
Conditioner 2-3
Control panel 1-23, 2-15
Regulator 2-3
Supply — video converter 6-1
Transients 1-31, 2-29
PP-7813/APS-137 programmer/power supply 6-38
PRACT BOMB (practice bomb) 3-91
Option 3-98
PRGM CONT matrix 1-82, 2-79
END MSN option 1-87, 2-84
INSERT DATA option 1-84, 2-82
PRGM STATUS option 1-82, 2-80
REINIT SYSTEM option 1-84, 2-81
RLOAD PRGM option 1-83, 2-80
SECRET LOCK option 1-85, 2-82
SYSTEM STATUS option 1-85, 2-83
PRGM STATUS option 1-82, 2-80
PROB CONTOR option 1-107, 2-105
Probability contour 1-45, 2-44
Procedure(s):
AN/USH-42 mission recorder/ reproducer set 6-26

Page No.

Harpoon LOS launch 3-46
Link setup 5-25
Normal load 1-23, 2-15
Processor, central 1-5
Program degradation 1-30
Program loading faults 1-26, 2-28
IOC faults 1-27
Memory faults 1-28
Program/avionics shutdown 1-30, 2-29
PTA/CON PTA matrix 1-112, 2-110

R

R-2231/APS-137 receiver pulse compressor 6-35
Rack lock controls 3-27
Radar:
Detect symbol 1-38, 2-36
Display formats 6-42
Operation 6-47
RADAR:
Geographic correct 4-20
Option 1-114, 2-112
RADAR DIAGNOSTIC option 1-117, 2-114
ESM DIAG option 1-119
ESM ORT option 1-121
RADAR ORT option 1-119
RADAR ORT option 1-119, 2-117
RADAR TRK option 1-89, 2-86
Radio set control indicator 5-1
RANGE CIR 1-71, 2-69
RANGE RADIUS 1-67, 2-65
Range radius circle 1-45, 2-44
RCNTR 1-58, 2-56
RCNTR ON A/C 1-80, 2-78
RCNTR ON FTP 1-81, 2-78
RDR A matrix 6-51
A/B SCAN option 6-63
CONTIN SCAN option 6-54
DSPL IMAGE option 6-62
DSPL PPI option 6-52
ENTER FIX option 6-64
ERASE option 6-55
FREEZE option 6-64
MIN SCAN option 6-63

Page No.

SEL MODE option 6-53
SET PRMTR option 6-56
RDR B matrix 6-65
A-SCAN SHIFT option 6-68
ANT CONT option 6-69
AUTO TRK option 6-66
EXPAND option 6-67
IFF ONLY option 6-71
ISAR STAE option 6-71
MIDCOURSE UPDATE option 6-72
REPOSN CURSOR option 6-68
Recording:
Airborne 6-28
Ground 6-29
Recovery alerts 1-37, 2-35
AYK-10 only 9-2
REDSPL matrix 1-88, 2-85
AIR TRK option 1-90, 2-88
ESM CNTCT option 1-88, 2-86
RADAR TRK option 1-89, 2-86
REMOTE option 1-90, 2-88
SUB TRK option 1-89, 2-87
SUR TRK option 1-90, 2-87
REF/AC MARK 1-64, 2-62
Reference mark 1-38, 2-36
Regulator, power 2-3
REINIT matrix 1-113, 2-111
ARM/ORD option 1-114, 2-111
COMM option 1-114, 2-112
DSPL option 1-113, 2-111
ESM option 1-115, 2-112
FLIR option 1-116, 2-113
MAD option 1-116, 2-113
NAV option 1-114, 2-112
RADAR option 1-114, 2-112
REINIT SYSTEM option 1-84, 2-81
Reinitialization 3-106
Kill stores 3-106
Search stores 3-107
Release (RLSE) 3-9
Reload, operational continue 1-28, 2-28
REMOTE option 1-90, 2-88
Remote weapon splash point 1-41, 2-40
REPEAT 1-58, 2-56
REPOSITION HOOK 1-36, 2-34

Page No.

REPOSN CURSOR option 6-68
RETAIN SYMBOL 1-68, 2-66
Return to base (PU emergency) 1-42, 2-40
RLOAD PRGM option 1-83, 2-80
RLSE (release) 3-91
  Option 3-23, 3-105

S

Safe data, data extraction and 1-31, 2-29
SAU:
  Power ON/OFF switch 7-2
  Temperature indicator, SRX power control and 7-1
Search and rescue sonobuoy release 3-8
SEARCH MODE matrix 1-91, 2-89
  AREA SEARCH option 1-94
  DATUM option 1-92
  FAR ON CIRCLE option 1-92, 2-89
Search power (SRCH PWR) switch 3-4
Search stores 3-1, 3-107
  Emergency jettison 3-6
  Introduction 3-1
  Launcher chutes 3-1
  Manual mode operation 3-4
  Search stores on-line control 3-8
Search stores control 3-4
  Search and rescue sonobuoy release 3-8
  Search power (SRCH PWR) switch 3-4
  Search stores emergency jettison 3-6
  Search stores manual mode operation 3-4
Search stores control functions 3-8
  Directional command activated sonobuoy system (DICASS) 3-9
  Directional frequency analysis and recording (DIFAR) 3-9
  Low frequency analysis and recording (LOFAR) 3-9
  Release (RLSE) 3-9
  SEARCH STORES matrix 3-9
  SMOKE 3-9
  Stores load (STR LOAD) 3-9
  Vertical line array DIFAR (VLAD) 3-9
SEARCH STORES matrix 3-9
  DICASS option 3-15
  DIFAR option 3-12
  LOFAR option 3-10
  RLSE option 3-23
  SMOKE option 3-17
  SONB PATT option 3-14
  STR LOAD option 3-21
  VLAD option 3-18
SECRET LOCK option 1-85, 2-82
SEL MODE option 6-53
SELECT LINE 1-59, 2-58
Selective jettison 3-40
SENSO MPD 1-11, 2-9
Sensor/turret assembly 6-1
Sequencing switches 3-117
Serial input/output 2-3
SET PRMTR option 6-56
SHORT BC (short broadcast) 5-5
  Option 5-18
Shutdown, program/avionics 1-30, 2-29
Signal, sound underwater 1-37, 2-36
Single:
  Action 1-53, 2-51
  Predict 1-43, 2-42
  Target automatic tracking 6-45
SINGLE PRED option 1-108, 2-106
SKIP CUE 1-58, 2-56
SLAM-ER:
  Automatic target acquisition (ATA) 3-51
  Page 3-62
  Pre-planned missions 3-51
  Target parameters, launch parameters and mission data pages 3-62
  Target-of-opportunity missions 3-51
Smoke 1-37, 2-36
SMOKE 3-9
  Option 3-17
SN-546/APS-137 synchronizer/exciter 6-35
SONB 1-77, 2-75
SONB PATT option 3-14
SONB STATUS (sonobuoy status) 5-5, 5-17
SONO CONT matrix 1-110, 2-108
Sonobuoy 1-37, 2-35
  Contact bearing 1-45, 2-42
  Monitor panel 7-1
Sound underwater signal 1-37, 2-36

Page No.

SPCL PATT option 1-112, 2-109
SPCL POINT (special point) 5-5
  Option 5-20
SRCH/ALGN option 6-7
SRX power control and SAU temperature indicator 7-1
Station(s):
  Bomb bay 3-25
  Select switches 3-32
  Wing 3-27
Steering 4-27
  Command indicators 4-32
  Manual 4-32
Steering description 4-27
  Fly-to-point 4-27
  FTP utilization and computer implementation 4-31
  Gate 4-28
  Great circle steering 4-28
  Manual steering 4-32
  Orbital capture 4-29
  Point-to-point designated steering 4-29
  Point-to-point steering 4-29
  Steering command indicators 4-32
Stores:
  Inventory page 3-56
  Load (STR LOAD) 3-9
STORES switch 3-29
STR LOAD option 3-21
SUB TRK option 1-89, 2-87
SUR CNTCT 1-80, 2-77
SUR TRK option 1-90, 2-87
Surface search mode 6-42
SUS (sound underwater signal) 3-91
  Option 3-104
Switch(es):
  COTAC matrix select 1-54, 2-52
  Dispenser safety 3-117
  Display control 1-54, 2-52
  ECM safety disable toggle 3-117
  Emergency jettison 3-29
  Keyset 1-54, 2-52
  Lighting conventions 1-53, 2-49
  MASTER ARM 3-29
  Matrix select 1-53, 2-51
  Option select 1-54, 2-52
  SAU power ON/OFF 7-2
  Search power (SRCH PWR) 3-4
  Sequencing 3-117
  STATION SELECT 3-32
  STORES 3-29
  TACCO/SENSO matrix select 1-54, 2-52
  TORP PRESET 3-25
  Trigger 3-32
Symbol:
  Area search 1-38, 2-36
  Radar detect 1-38, 2-36
System:
  Acoustic 7-1
  Alerts 1-35, 2-33, 9-1
  APS-137(V) radar 6-31
  Armament 3-1
  Armament control 3-29
  Electronic countermeasures 3-107
  Electronic support measures 6-75
  FLIR 6-1
  Integrated control 1-52, 2-45
  Interface 5-3
  Operation 3-107
  Status pages 3-64
  Tactical display 1-8, 2-8
  Test pages 3-64
System components 5-1, 6-1
  Communications controller 5-1
  Control and servo electronics unit 6-1
  Data terminal set 5-1
  KG-40A secure data keyer 5-2
  Power supply — video converter 6-1
  Radio set control indicator 5-1
  Sensor/turret assembly 6-1
  System interface 5-3
SYSTEM STATUS option 1-85, 2-83

T

T-1203/APS-116 transmitter 6-35
TABLE EXTRCT 1-69, 2-67
TAC AIDS matrix 1-95, 2-93
  CMPT INTSCT option 1-104, 2-101

Page No.

CONTIN PRED option 1-102, 2-100
FIX DESIG option 1-99, 2-96
FIX HISTRY option 1-103, 2-101
GEN TRK option 1-101, 2-99
GEN TRK option (single fix) 1-102, 2-99
INTCPT FTP option 1-109, 2-107
MODIFY CAT/ID (modify category/ ID option) 1-96, 2-93
ORBIT option 1-109, 2-107
PROB CONTOR option 1-107, 2-105
SINGLE PRED option 1-108, 2-106
TAC NAV matrix 4-23
A/C TRK (aircraft track) option 4-26
INSERT SONB (insert sonobuoy) option 4-24
TAC NAV matrix functions 4-23
A/C TRK (aircraft track) 4-23
Enter FTP (enter fly-to-point) 4-23
Insert SONB (insert sonobuoy) 4-23
TAC NAV matrix 4-23
TACAN geographic correct 4-17
TACCO MPD 1-11, 2-9
TACCO/SENSO:
Alphanumeric mode 1-61, 2-59
Display control 1-63, 2-61
Matrix select switches 1-54, 2-51
MPD 1-52, 2-45
Tactical diagnostic tests 1-116, 2-114
Tactical diagnostic/operational readiness tests 1-116, 2-114
DIA ORT MATRIX 1-116, 2-114
Introduction 1-116, 2-114
Operational readiness tests 1-116, 2-114
Radar diagnostic option 1-117
Tactical diagnostic tests 1-116, 2-114
Tactical display system 1-8, 2-8
Display off-line controls 1-11, 2-15
Displays 1-10, 2-9
Introduction 1-8, 2-8
Power control panel 1-23, 2-15
Universal display generator 1-8, 2-8
Tactical plot display 1-46, 2-45
COTAC MPD 1-50, 2-45

Page No.

Pilot display 1-46, 2-45
TACCO/SENSO MPD 1-52, 2-45
Tape installation 6-26
Target designator and hook symbol 6-42
TERM CUE SEQ 1-60, 2-58
Test(s):
Operational readiness 1-116, 2-114
Pattern displays 6-47
Tactical diagnostic 1-116, 2-114
TGT AIDS (target aids) 3-91
Option 3-106
TN AMPLFY (track number amplify) 5-5
Option 5-23
TN CALL (track number call) 5-5
Option 5-22
TORP (torpedo) 3-91
Option 3-92
TORP PRESET SWITCH 3-25
Track manage 5-4
Option 5-12
Trackball, hook verify, and enter 1-52, 2-49
Enter 1-53, 2-49
Hook verify 1-53, 2-49
Trackball 1-52, 2-49
Trigger:
Pulse amplifier 3-117
Switch 3-32

U

Unit:
Armament control display navigation 3-53
C-11229/APS-137(V) off-line control 6-40
CV11164/APS-137 radar interface 6-33
Control 3-108
Control and servo electronics 6-1
Participating 1-46, 2-44
Universal display generator 1-8, 2-8

V

Vector 1-45, 2-43
VECTOR 1-63, 2-61
Vertical line array DIFAR (VLAD) 3-9
Video switch assembly 6-26

Page No.

VISUAL CNTCT 1-74, 2-72
VLAD option 3-18

W

Waypoint, harpoon 1-39, 2-37
Weapon(s):
  Fly-to-point 3-89
  FTP 4-31
  Inventory 3-90
  Load indicators 3-37
  Selection 3-68
  Splash point 1-38, 2-36
Window, B-scan autotrack 6-45
Wing racks 3-27
  Wing station rack lock controls 3-29
Wing station(s) 3-27
  Rack lock controls 3-29
WPN FTP (weapon fly-to-point) 3-91
  Option 3-102

X

XFR ITEM option 1-111, 2-109

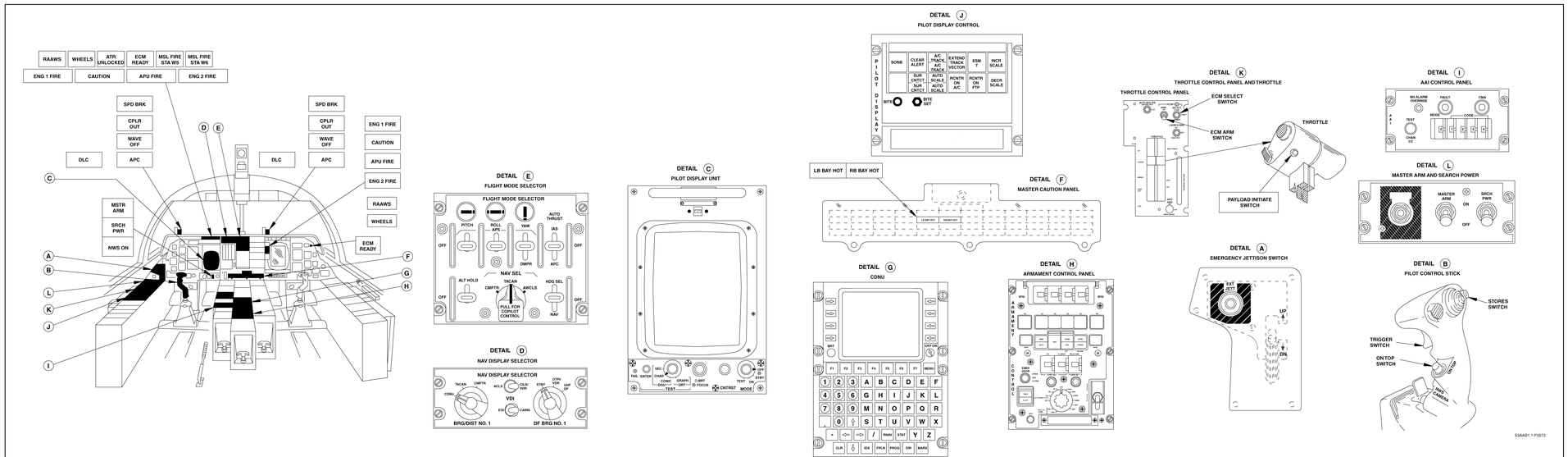

Pilot Station Weapon System Displays and Controls

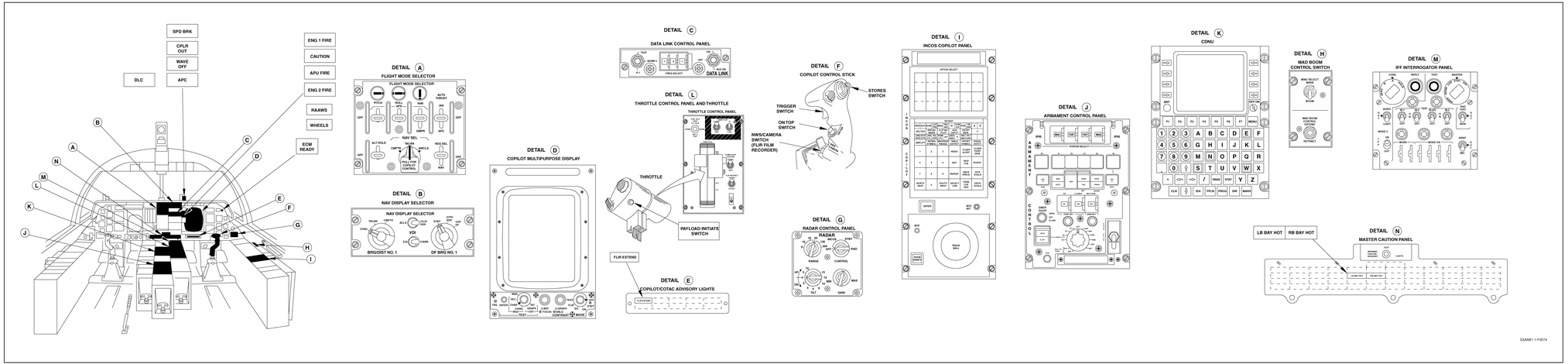

Copilot/COTAC Station Weapon System Displays and Controls

FO-2 (Reverse Blank)

ORIGINAL

TACCO FORWARD PANELS

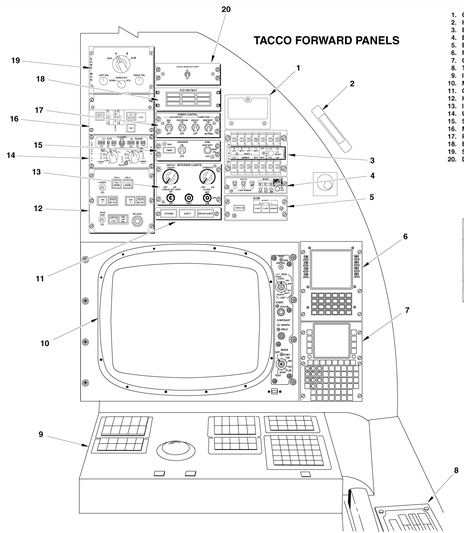

1. CHECKLIST HOLDER
2. HATCH SEVERANCE HANDLE
3. ECM PROGRAMMER PANEL
4. ECM CONTROL PANEL
5. ECM INITIATE PANEL
6. RSCI
7. CDNU
8. TACCO SIDE CONSOLE
9. INCOS TACCO TRAY
10. MPD AND CONTROL PANEL
11. OXYGEN/EJECT ADVISORY LIGHT
12. HACLCS CONTROL PANEL
13. INTERIOR LIGHTS PANEL
14. USH-42 REMOTE CONTROL AND ADVISOR
15. SONOBUOY POWER AND ESM GND TEST PANEL
16. MANUAL SEARCH STORES CONTROL PANEL
17. POWER CONTROL PANEL
18. ECS FAN FAULT PANEL
19. SONOBUOY MONITOR PANEL
20. DISPLAY GENERATOR POWER PANEL

DETAIL (5)
ECM INITIATE PANEL

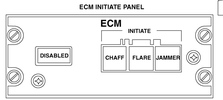

DETAIL (3)
ECM PROGRAMMER PANEL

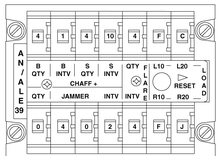

DETAIL (4)
ECM CONTROL PANEL

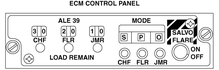

DETAIL (19)
SONO MONITOR PANEL

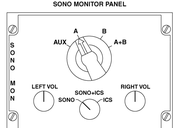

DETAIL (8)
TACCO SIDE CONSOLE

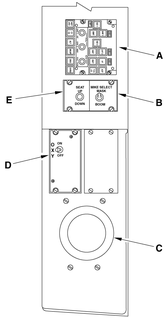

A CCG CONTROL INDICATOR
B MICROPHONE SELECT PANEL
C THERMOS JUG HOLDER
D OXYGEN PANEL
E SEAT ADJUSTMENT PANEL

DETAIL (9)
INCOS TACCO TRAY

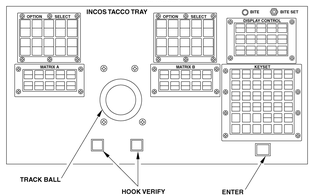

DETAIL (12)
HACLCS CONTROL PANEL

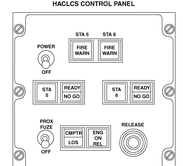

DETAIL (15)
SONO POWER/ESM GND TEST PANEL

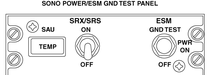

DETAIL (20)
DISPLAY GENERATOR POWER PANEL

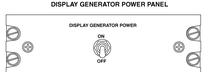

DETAIL (17)
POWER CONTROL PANEL

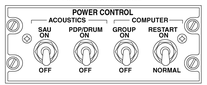

DETAIL (16)
MANUAL SEARCH STORES CONTROL PANEL

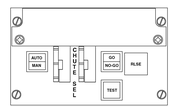

DETAIL (14)
USH-42 REMOTE CONTROL AND ADVISOR

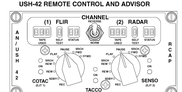

S3AAB1.1-F0575

TACCO Station Weapon System Displays and Controls

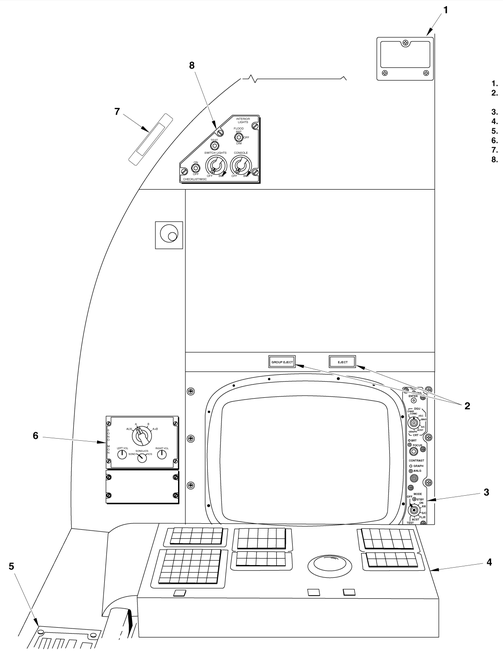

1. CHECKLIST HOLDER
2. EJECT ALERT WARNING AND GROUP EJECT ADVISORY LIGHTS
3. MPD AND CONTROL PANEL
4. INCOS SENSO TRAY
5. SENSO SIDE PANEL
6. SONO MONITOR PANEL
7. HATCH SEVERENCE PANEL
8. INTERIOR LIGHTS PANEL

DETAIL (3)
MULTIPURPOSE DISPLAY UNIT

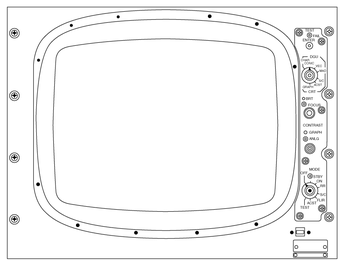

DETAIL (4)
INCOS SENSO TRAY

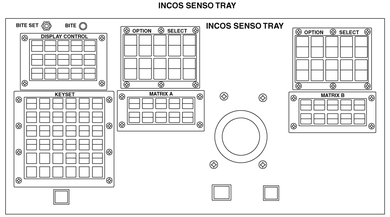

DETAIL (5)
SENSO SIDE CONSOLE

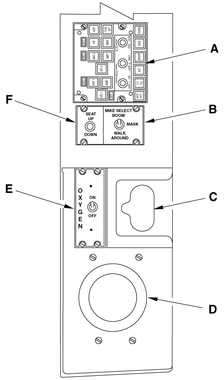

A CCG CONTROL INDICATOR
B MICROPHONE SELECT PANEL
C LIFE SUPPORT (OXYGEN) CONNECTION
D THERMOS JUG HOLDER
E OXYGEN PANEL
F SEAT ADJUSTMENT PANEL

DETAIL (6)
SONO MONITOR PANEL

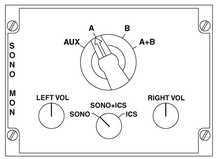

DETAIL (8)
INTERIOR LIGHTS PANEL

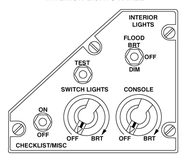

S3AAB1.1-F0576

SENSO Station Weapon System Displays and Controls

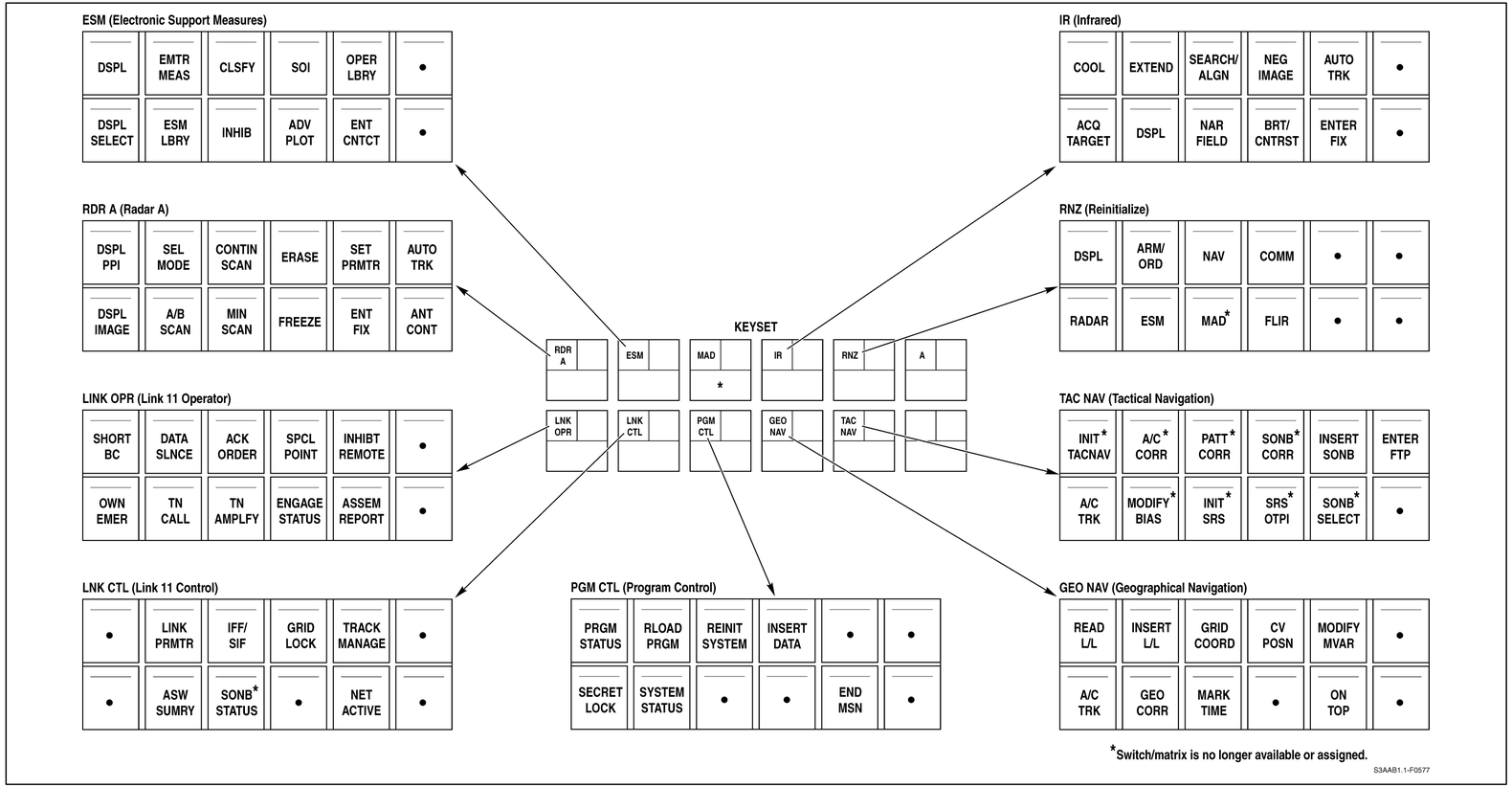

COTAC Matrix A Option Select Legends

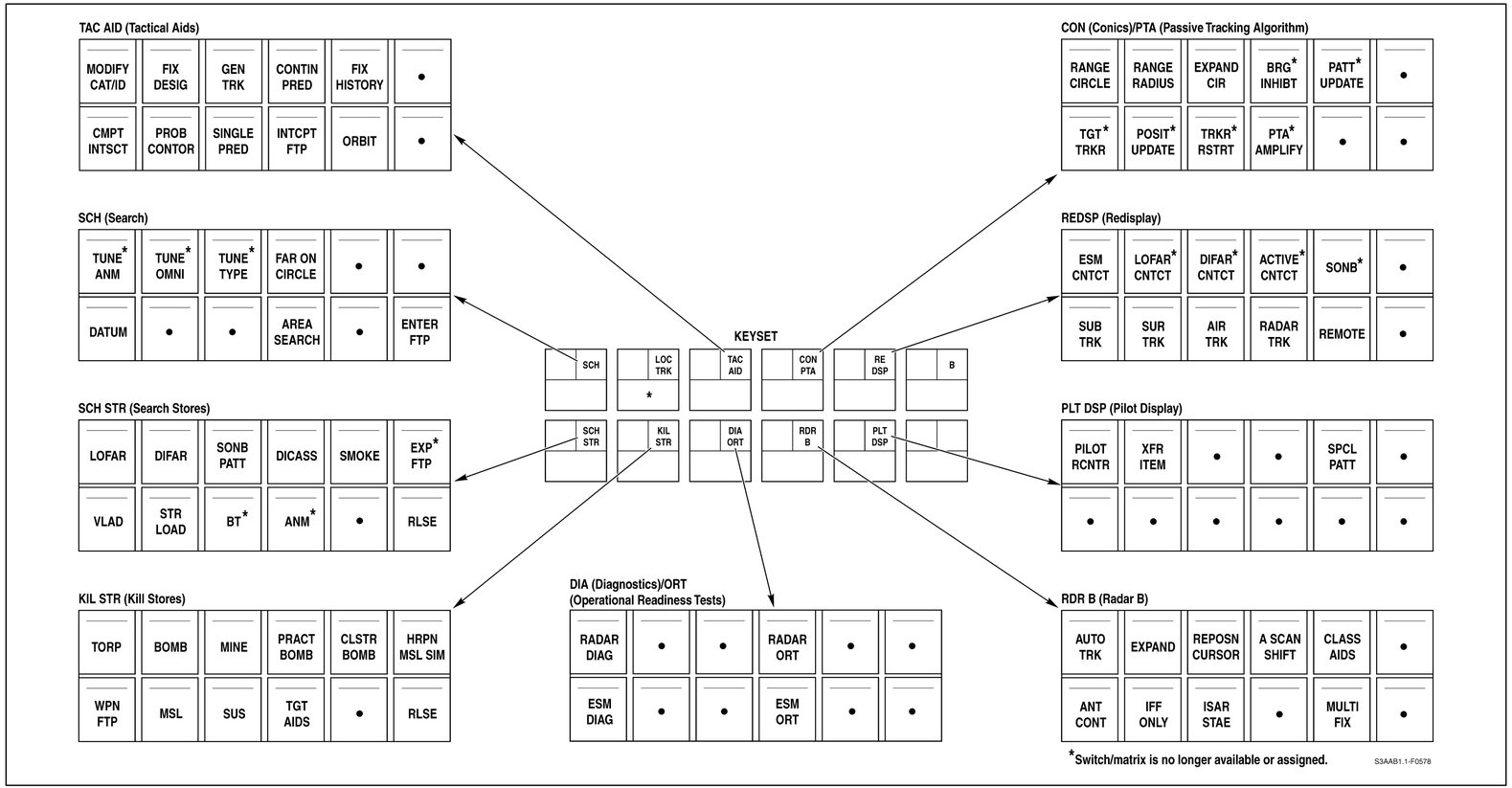

COTAC Matrix B Option Select Legends

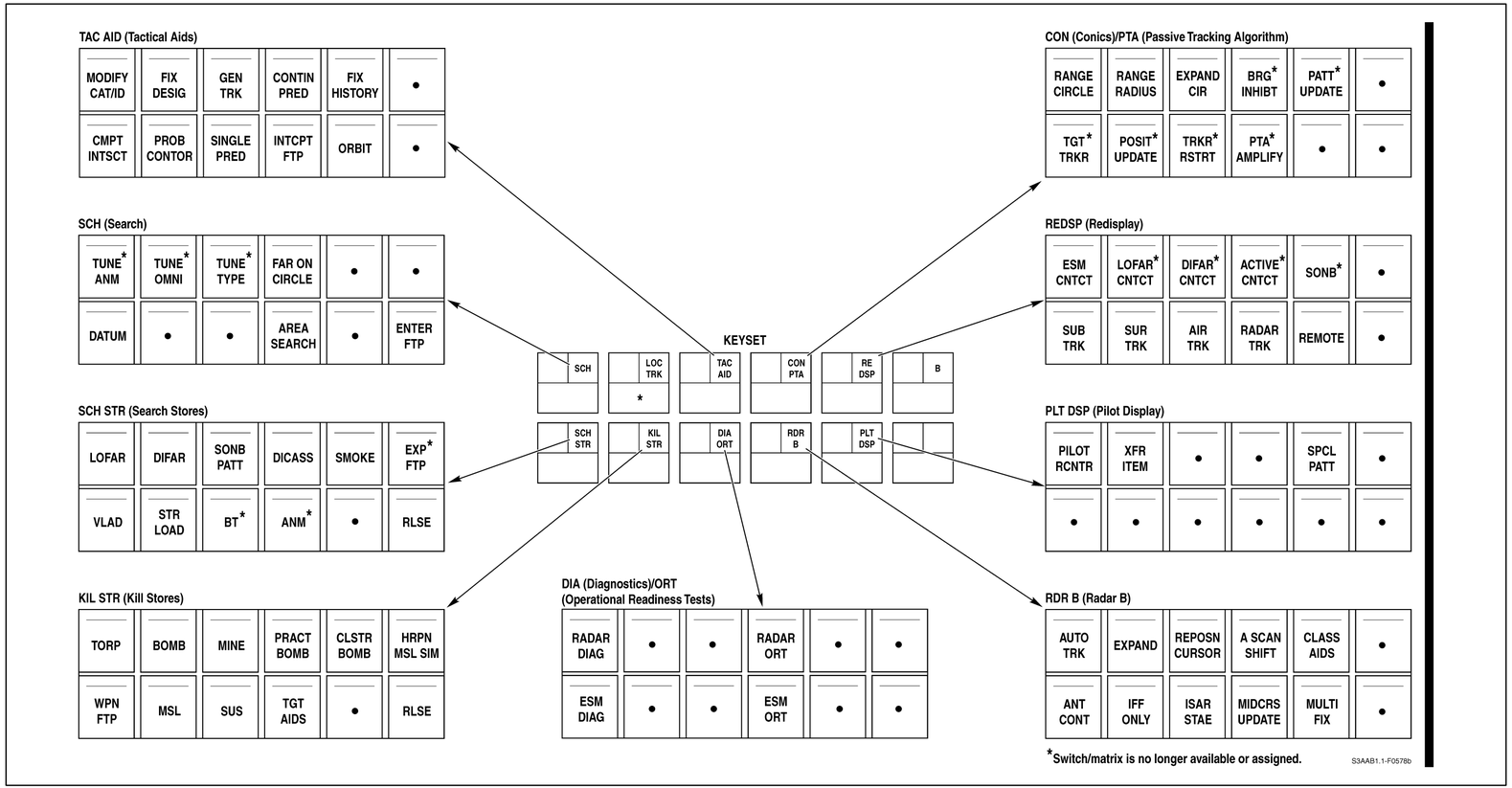

COTAC Matrix B Option Select Legends (Aircraft Incorporating AFC-287)

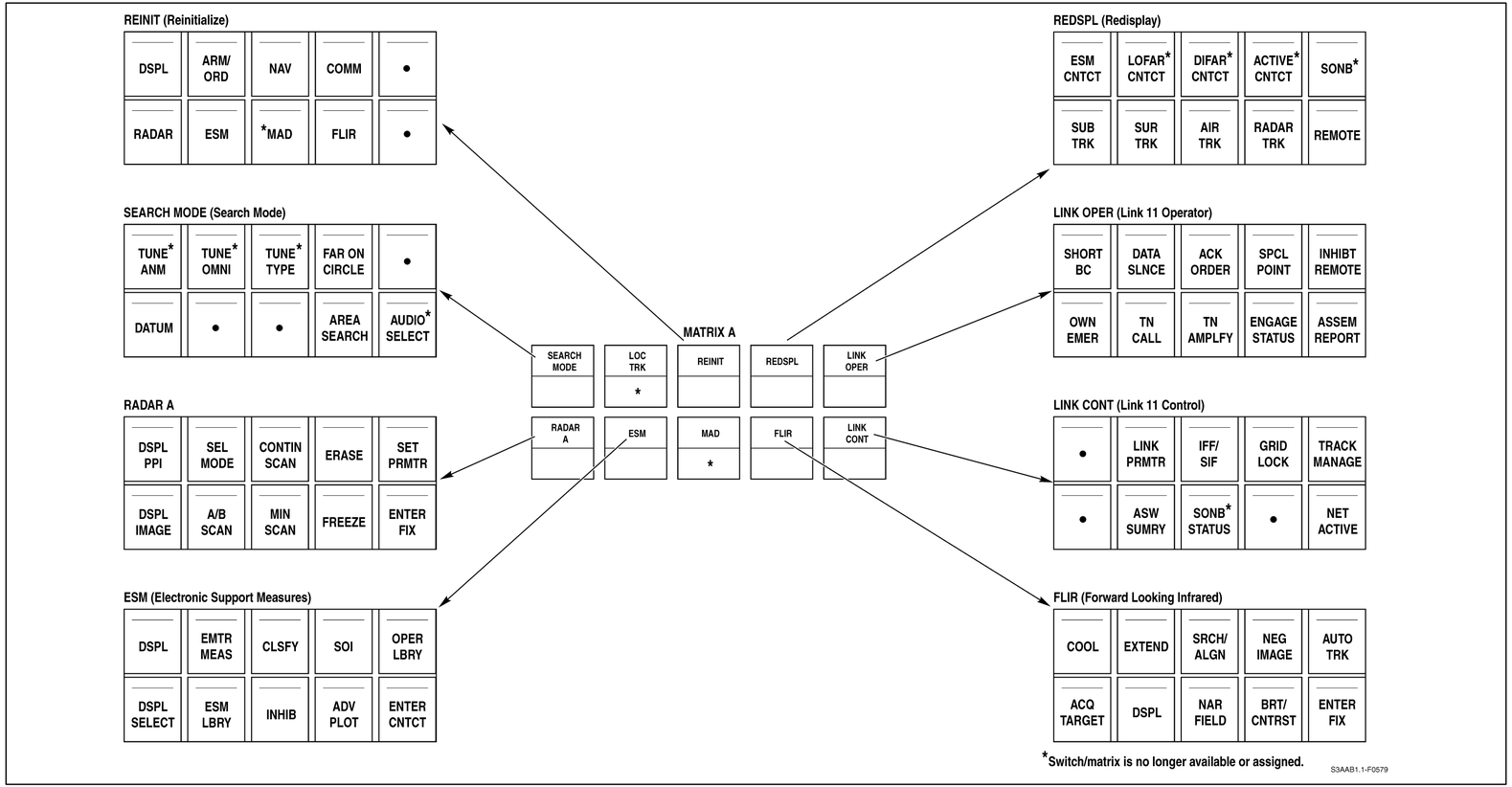

TACCO Matrix A Option Select Legends

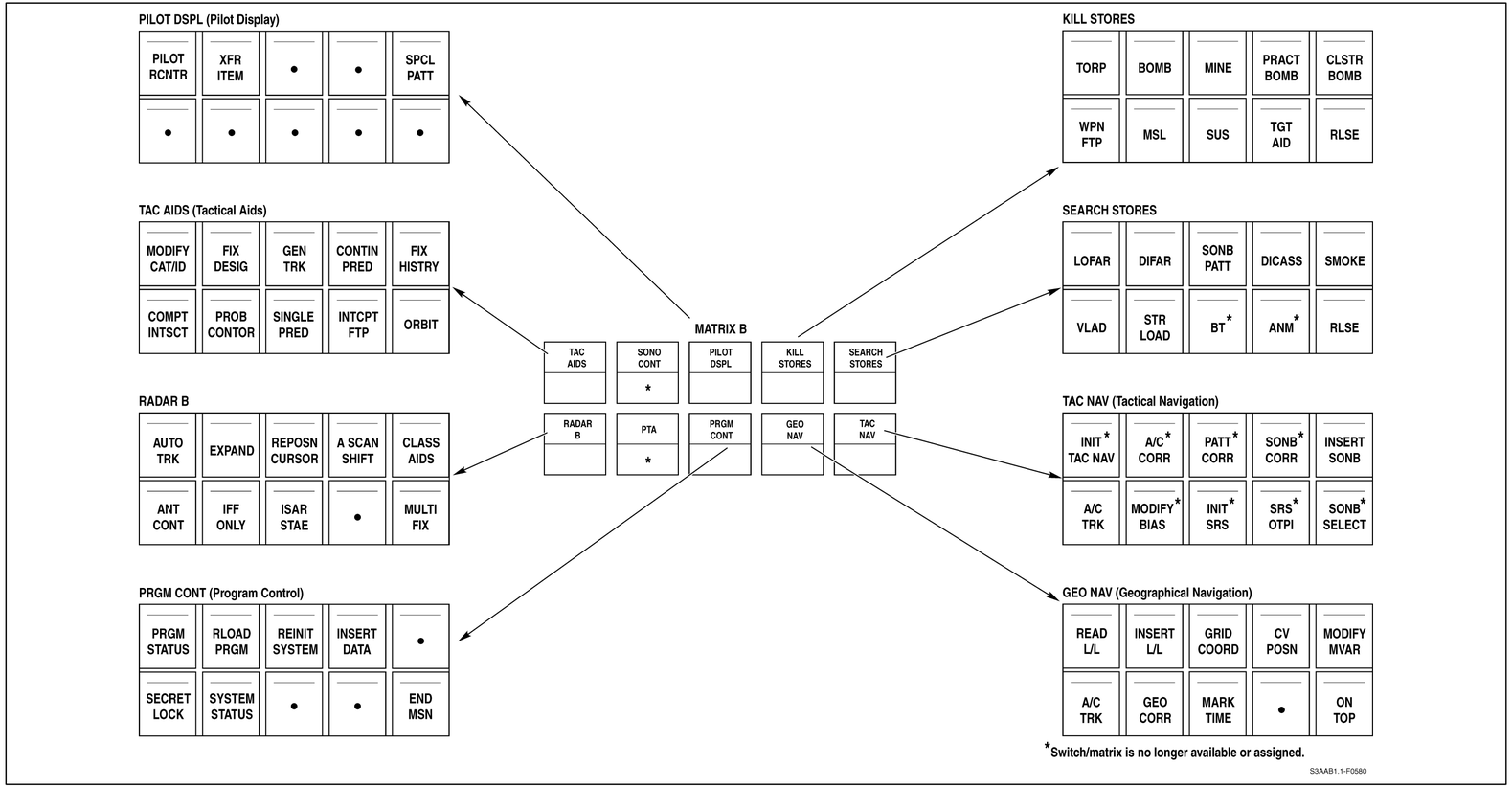

TACCO Matrix B Option Select Legends

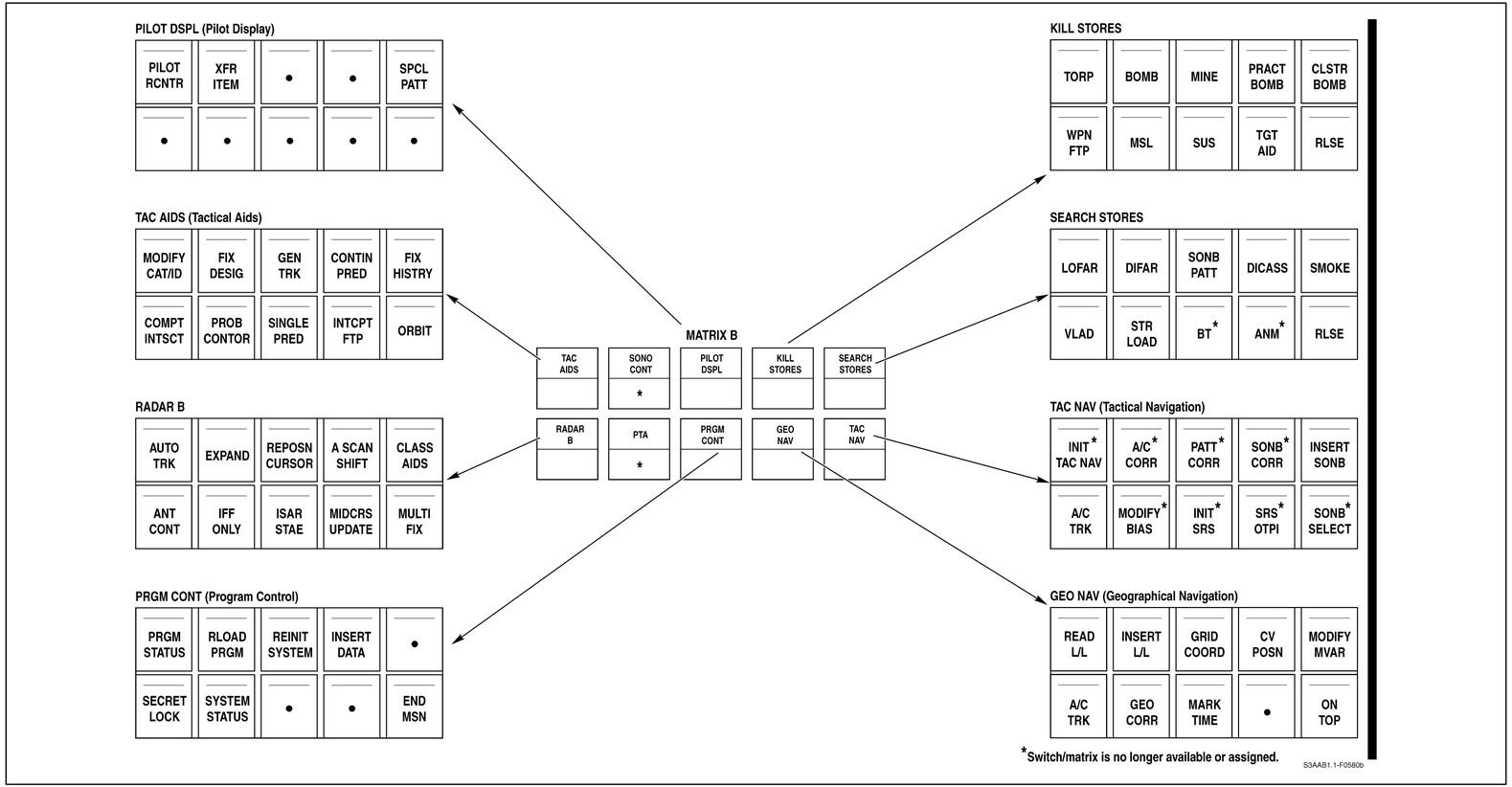

TACCO Matrix B Option Select Legends (Aircraft Incorporating AFC-287)

ITEM	TYPE DESIGNATOR	NOMENCLATURE	
L1	R-1623/APN	RADAR BEACON RECEIVER	NOSE
L2	RT-1028/APN-202	RADAR RECEIVER-TRANSMITTER	
L3	KY-651/ARA-63	PULSE DECODER	
L4	AS-2625/ARA-63	ANTENNA	
L5	R-1379/ARA-63	RADIO RECEIVER	
L6	SN-416A/APX-76A	SYNCHRONIZER	
L7	RT-868A/APX-76A(V)	RECEIVER-TRANSMITTER	L FWD EXT BAY
L8	KIR-IA/TSEC	COMPUTER	
L9	SA-1568A/APX-76A	SWITCH-AMPLIFIER	
L10	SA-1769( )119	RF TRANSMISSION LINE SWITCH	
L11	TS-1843B/APX	TEST SET	
L12	AM-3624/ARA-50	AMPLIFIER-RELAY	
L13	KIT-1A/TSEC	COMPUTER	
L14	RT-859A/APX-72	RECEIVER-TRANSMITTER	
L15	IP 1214/AA	INFRARED VIEWER	
L16	AN/USH-42	MISSION RECORDER/REPRODUCER SET	ENTRY FLOOR
L17		ENGINE TIME-TEMP RECORDER	
L18	TRU-161/A	RATE GYROSCOPE TRANSMITTER	
L19	CN-1263/ASW-92(V)	INERTIAL MEASURING UNIT	CABIN
L20	KYK-13	CRYPTO FILL PANEL	
L21	AN/ASQ-194	DIGITAL DATA SET	

ITEM	TYPE DESIGNATOR	NOMENCLATURE	
L22	ASA-82/UDG	CONVERTER-DIGITAL TO ANALOG	L INT BAY
L23	ASA-82/UDG	CONVERTER-DIGITAL TO ANALOG	
L24	PP6664/ASQ-147	POWER SUPPLY	
L25	C-8759B/AA	INFRARED CONTROL CONVERTER	
L26	RD-348/ASH	SIGNAL DATA RECORDER-REPRODUCER	
L27	PP-7197/AA	POWER SUPPLY VIDEO CONVERTER	
L28	AN/AYK-10/23	DIGITAL COMPUTER	FUSELAGE BOTTOM
L29	SONOBUOY SAFETY SWITCH		
L30	SA-1874/ALE-39	SEQUENCE SWITCH (3)	ECS COMP'T
L31	AM-7218/ALE-39	TRIGGER PULSE AMPLIFIER	
L32	MX-7721/ALE-29A	DISPENSER HOUSING	AFT FUSELAGE
L33	MX-7721/ALE-29A	DISPENSER HOUSING	
L34	KY-747/ASQ-147	COMMAND DECODER-PROGRAMMER	ECS COMP'T
L35	ANTI-SKID CONTROL BOX		
L36	AN/ASH-37	SDRS DATA ENTRY	CABIN

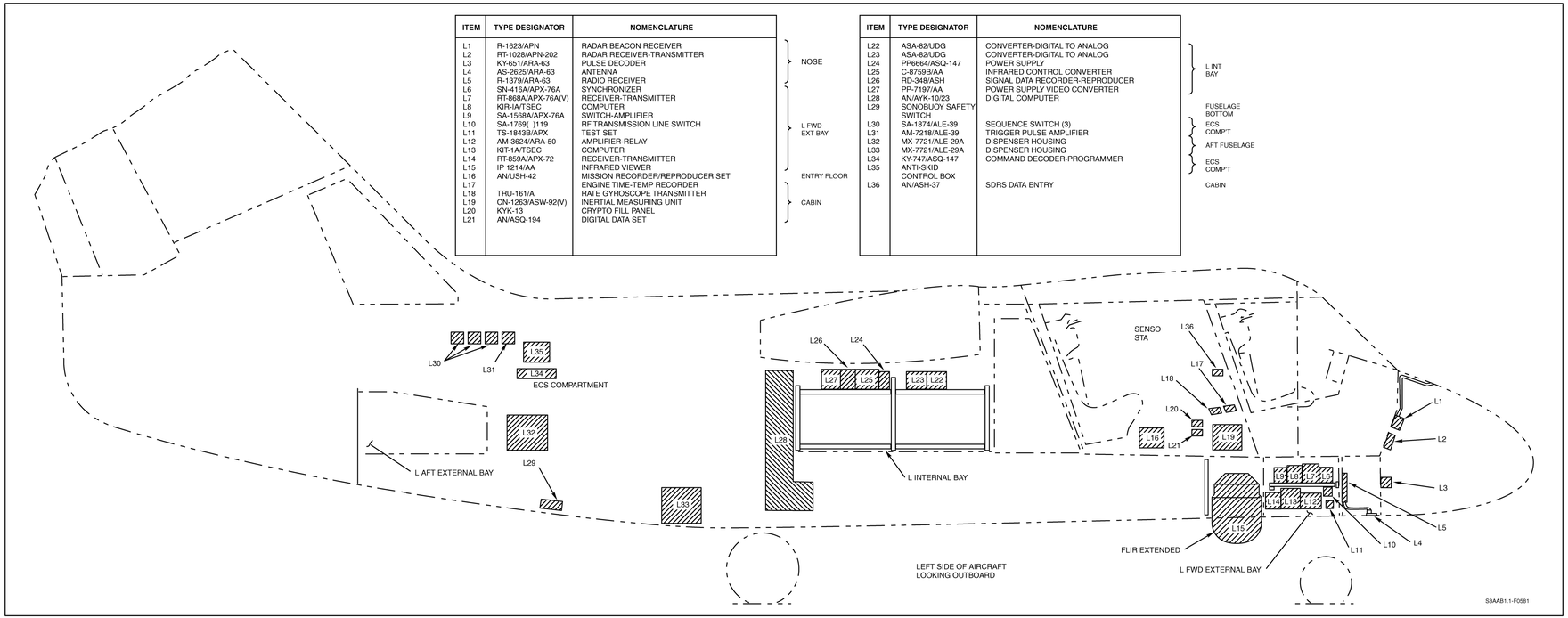

Avionics Equipment Location (Left)

ITEM	TYPE DESIGNATOR	NOMENCLATURE	
L1	R-1623/APN	RADAR BEACON RECEIVER	NOSE
L2	RT-1028/APN-202	RADAR RECEIVER-TRANSMITTER	
L3	KY-651/ARA-63	PULSE DECODER	
L4	AS-2625/ARA-63	ANTENNA	
L5	R-1379/ARA-63	RADIO RECEIVER	
L6	SN-416A/APX-76A	SYNCHRONIZER	L FWD EXT BAY
L7	RT-868A/APX-76A(V)	RECEIVER-TRANSMITTER	
L8	KIR-IA/TSEC	COMPUTER	
L9	SA-1568A/APX-76A	SWITCH-AMPLIFIER	
L10	SA-1769( )119	RF TRANSMISSION LINE SWITCH	
L11	TS-1843B/APX	TEST SET	
L12	AM-3624/ARA-50	AMPLIFIER-RELAY	
L13	KIT-1A/TSEC	COMPUTER	
L14	RT-859A/APX-72	RECEIVER-TRANSMITTER	
L15	IP 1214/AA	INFRARED VIEWER	ENTRY FLOOR
L16	AN/USH-42	MISSION RECORDER/REPRODUCER SET	
L17		ENGINE TIME-TEMP RECORDER	
L18	TRU-161/A	RATE GYROSCOPE TRANSMITTER	
L19	CN-1263/ASW-92(V)	INERTIAL MEASURING UNIT	CABIN
L20	KYK-13	CRYPTO FILL PANEL	
L21	AN/ASQ-194	DIGITAL DATA SET	

ITEM	TYPE DESIGNATOR	NOMENCLATURE	
L22	ASA-82/UDG	CONVERTER-DIGITAL TO ANALOG	L INT BAY
L23	ASA-82/UDG	CONVERTER-DIGITAL TO ANALOG	
L24	PP6664/ASQ-147	POWER SUPPLY	
L25	C-8759/AA	INFRARED CONTROL CONVERTER	
L26	RD-348/ASH	SIGNAL DATA RECORDER-REPRODUCER	
L27	PP-7197/AA	POWER SUPPLY VIDEO CONVERTER	
L28	AN/AYK-10/23	DIGITAL COMPUTER	
L29	MIB	AGM-32 MISSILE INTERFACE BOX	
L30		AGM-32 DTS	FUSELAGE BOTTOM
L31	SONOBUOY SAFETY SWITCH		ECS COMP'T
L32	SA-1874/ALE-39	SEQUENCE SWITCH (3)	
L33	AM-7218/ALE-39	TRIGGER PULSE AMPLIFIER	AFT FUSELAGE
L34	MX-7721/ALE-29A	DISPENSER HOUSING	
L35	MX-7721/ALE-29A	DISPENSER HOUSING	ECS COMP'T
L36	KY-747/ASQ-147	COMMAND DECODER-PROGRAMMER	
L37	ANTI-SKID CONTROL BOX		CABIN
L38	AN/ASH-37	SDRS DATA ENTRY	

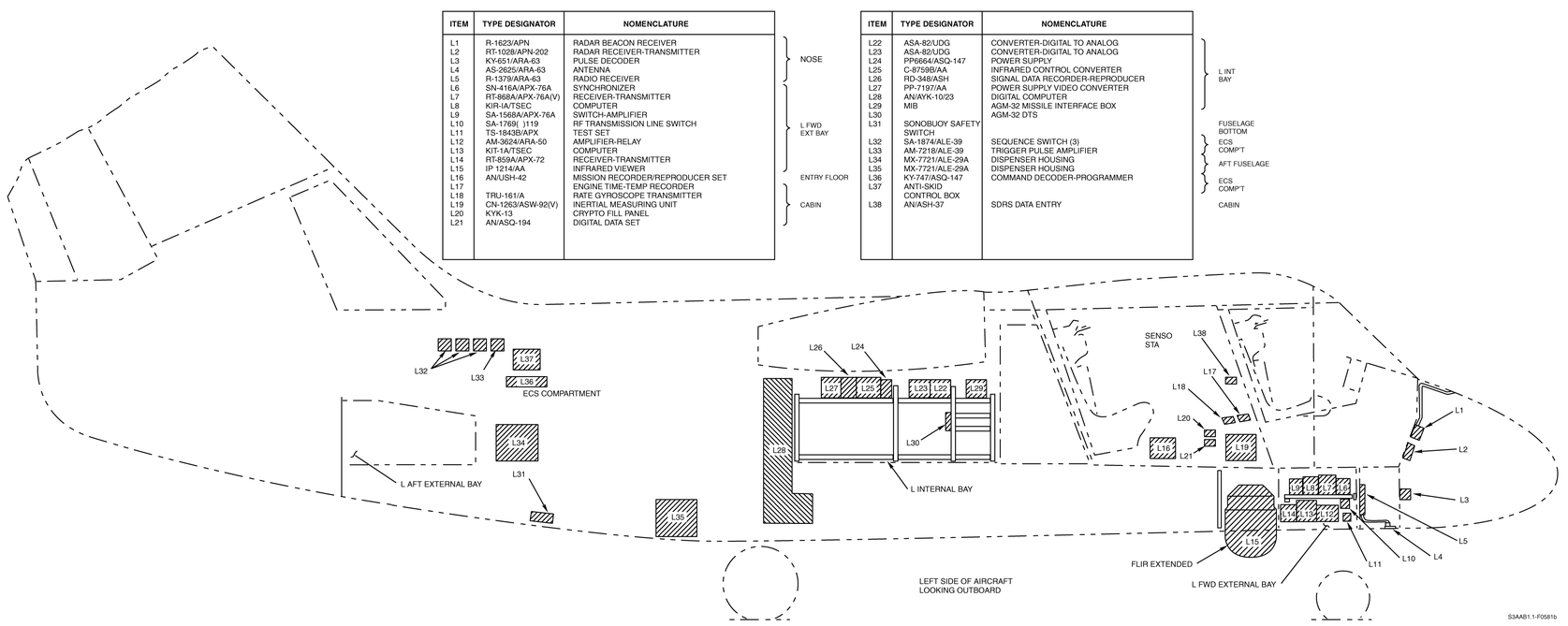

Avionics Equipment Location (Left) (Aircraft Incorporating AFC-287)

AVIONICS EQUIPMENT LOCATION DIAGRAM

ITEM	TYPE DESIGNATOR	NOMENCLATURE	
R1	AS-3637A/APS-137	ANTENNA	NOSE
R2	R2231/APS-137	RECEIVER-PULSE COMPRESSOR	R FWD EXT BAY
R3	SN-5468/APS-137	SYNCHRONIZER-EXCITER	
R4	T-1203/APS-116	RADAR TRANSMITTER	
R5	CV-2230B/ASW-26B	CONVERTER-RECEIVER	R FWD EXT BAY CABIN
R6		STEERING CONTROL AMPLIFIER	
R7	CN-1366/ASN-107	DISPLACEMENT GYROSCOPE	
R8	J-3036/ASQ-147	ARMAMENT DISTRIBUTION BOX	R BOMB BAY
R9	KY-746/ASQ-147	COMMAND SIGNALS DECODER	
R10		PITCH RATE SENSOR	
R11	MX-8967/ASW-33	ELECTRICAL ACCELEROMETER (2) (FWD & AFT)	R INT BAY
R12	CN-1370/ASW-33	RATE GYROSCOPE ASSEMBLY (2)	
R13	KG-40/TSEC	SECURE DATA KEYER	
R14	R-139/ARN-83	RADIO RECEIVER	
R15	672792-121	SPEED BRAKE AND TRIM CONTROL UNIT	
R16	KY-58/TSEC	SECURE VOICE KEYER	
R17	CPU-152/A	SCADC	
R18		EGPS TSEC FILL	
R19	CV-3744/APS-137(V)	SIGNAL DATA CONVERTER	
R20		DIGITAL FLIGHT DATA CONTROL BOX	
R21	CM499/ALR-76	SIGNAL COMPARATOR	

ITEM	TYPE DESIGNATOR	NOMENCLATURE	
R22	PP6188/ASN-92V	INERTIAL NAVIGATION POWER SUPPLY	R INT BAY
R23		NAVIGATION INTERFACE UNIT	
R24	C-11164/APS-137(V)	RADAR INTERFACE UNIT	
R25		AFCS SELECTOR ■	
R26	PP7813/APS-137(V)	POWER SUPPLY	
R27	RT-1627/ARN-153V-2	TACAN RCVR-XMTR	
R28	R-2414/U	GPS RCVR (MAGR)	
R29	AN/AYK-10/23	DIGITAL COMPUTER	
R30	LS 602/A1	INTERCOM STA	R AFT EXT BAY
R31	CV-2830/AYC	DIGITAL TO ANALOG CONVERTER	
R32	CV-3048A/A1	INTERCONNECTING CONVERTER	
R33	RT-1017/ARC-156	RADIO RECEIVER-TRANSMITTER (2)	
R34	RT-1016/ARC-153	RADIO RECEIVER-TRANSMITTER	
R35	AM-6384/ARC-153	RF AMPLIFIER	
R36	RT-1042/APN-194	RADAR RECEIVER-TRANSMITTER	
R37	CU-1985/ARC-153	ANTENNA COUPLER	VERT STAB
R38	MX-7721/ALE-29	DISPENSER	AFT FUSELAGE
R39	AS-3675/AR	ANTENNA	
R40	MX-7721/ALE-29	DISPENSER	
R41		DFDC MAINT DISPLAY PANEL ■	

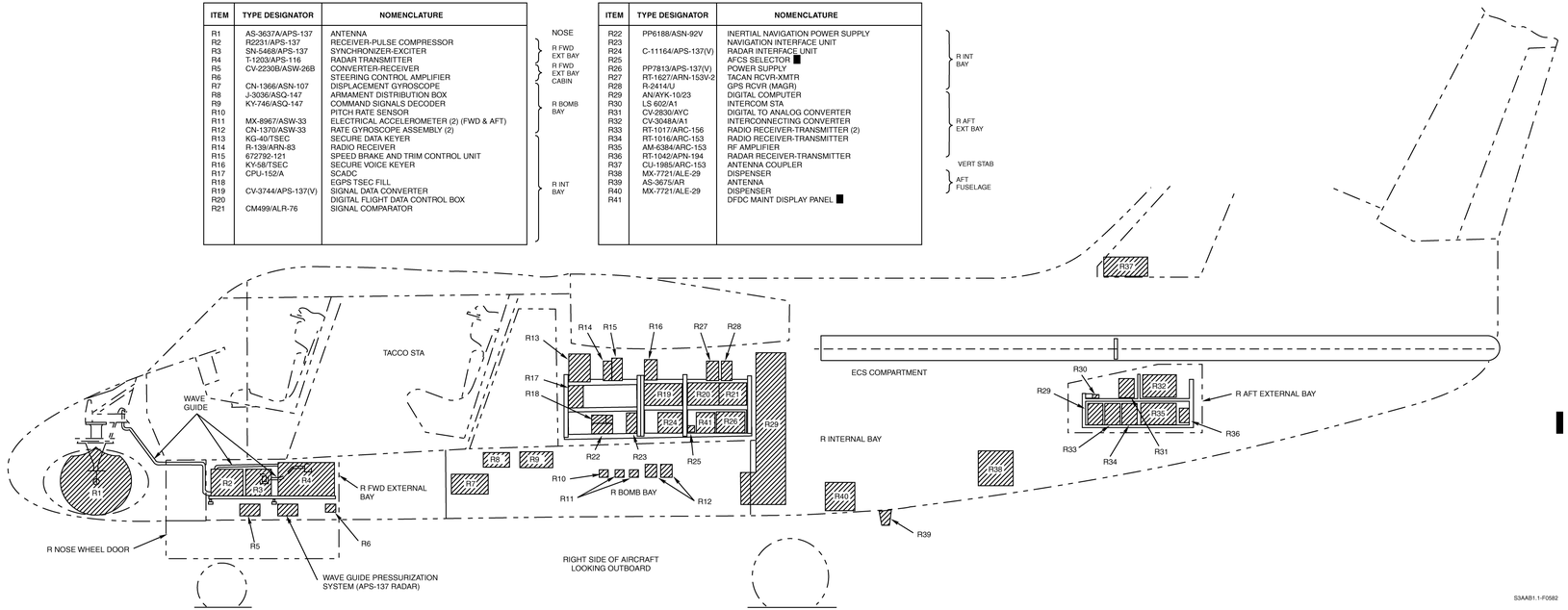

Avionics Equipment Location (Right)

AVIONICS EQUIPMENT LOCATION DIAGRAM

ITEM	TYPE DESIGNATOR	NOMENCLATURE	
R1	AS-3637A/APS-137	ANTENNA	NOSE
R2	R2231/APS-137	RECEIVER-PULSE COMPRESSOR	R FWD EXT BAY
R3	SN-5468/APS-137	SYNCHRONIZER-EXCITER	
R4	T-1203/APS-116	RADAR TRANSMITTER	R FWD EXT BAY CABIN
R5	CV-2230B/ASW-26B	CONVERTER-RECEIVER	
R6		STEERING CONTROL AMPLIFIER	
R7	CN-1366/ASN-107	DISPLACEMENT GYROSCOPE	R BOMB BAY
R8	J-3036/ASQ-147	ARMAMENT DISTRIBUTION BOX	
R9	KY-746/ASQ-147	COMMAND SIGNALS DECODER	
R10		PITCH RATE SENSOR	
R11	MX-8967/ASW-33	ELECTRICAL ACCELEROMETER (2) (FWD & AFT)	
R12	CN-1370/ASW-33	RATE GYROSCOPE ASSEMBLY (2)	
R13	KG-40/TSEC	SECURE DATA KEYER	R INT BAY
R14	672792-121	SPEED BRAKE AND TRIM CONTROL UNIT	
R15	KYV-5	SATCOM ANDVT	
R16	KY-58/TSEC	SECURE VOICE KEYER	
R17	CPU-152/A	SCADC	
R18		EGPS TSEC FILL	
R19		UHF 1 HAVE QUICK FILL	
R20		UHF 2 HAVE QUICK FILL	
R21	CV-3744/APS-137(V)	SIGNAL DATA CONVERTER	
R22		DIGITAL FLIGHT DATA CONTROL BOX	
R23	CM499/ALR-76	SIGNAL COMPARATOR	

ITEM	TYPE DESIGNATOR	NOMENCLATURE	
R24	PP6188/ASN-92V	INERTIAL NAVIGATION POWER SUPPLY	R INT BAY
R25		NAVIGATION INTERFACE UNIT	
R26	C-11164/APS-137(V)	RADAR INTERFACE UNIT	
R27	MD-1324	SATCOM MODEM	
R28		AFCS SELECTOR	
R29	PP7813/APS-137(V)	POWER SUPPLY	
R30	RT-1627/ARN-153V-2	TACAN RCVR-XMTR	R AFT EXT BAY
R31	R-2414/U	GPS RCVR-XMTR	
R32	AN/AYK-10/23	DIGITAL COMPUTER	
R33	LS 602/A1	INTERCOM STA	
R34	CV-2830/AYC	DIGITAL TO ANALOG CONVERTER	
R35	CV-3048/AA1	INTERCONNECTING CONVERTER	
R36	RT-1017/ARC-156	RADIO RECEIVER-TRANSMITTER (2)	
R37	RT-1016/ARC-153	RADIO RECEIVER-TRANSMITTER	
R38	AM-6384/ARC-153	RF AMPLIFIER	
R39	RT-1042/APN-194	RADAR RECEIVER-TRANSMITTER	
R40	CU-1985/ARC-153	ANTENNA COUPLER	VERT STAB AFT FUSELAGE
R41	MX-7721/ALE-29	DISPENSER	
R42	AS-3675/AR	ANTENNA	
R43	MX-7721/ALE-29	DISPENSER	
R44		DFDC MAINT DISPLAY PANEL	

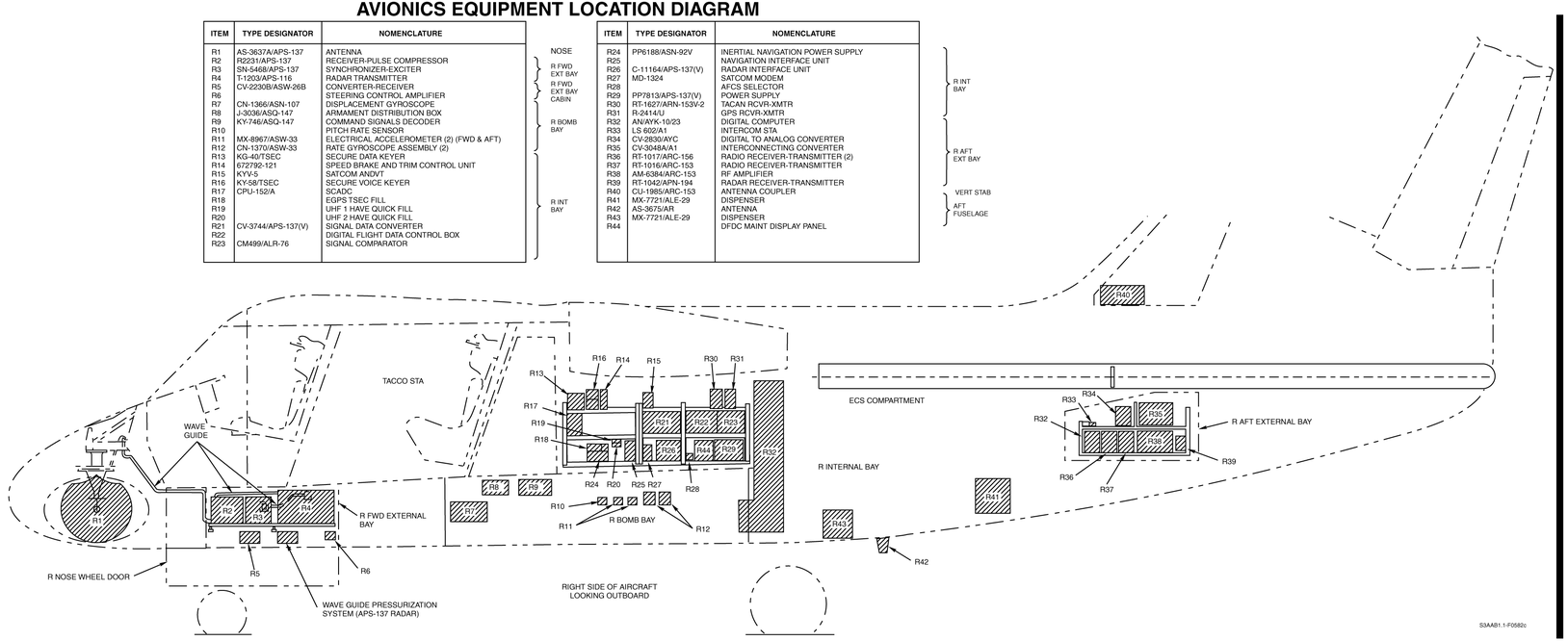

Avionics Equipment Location (Right) (Aircraft Incorporating AFC-281)

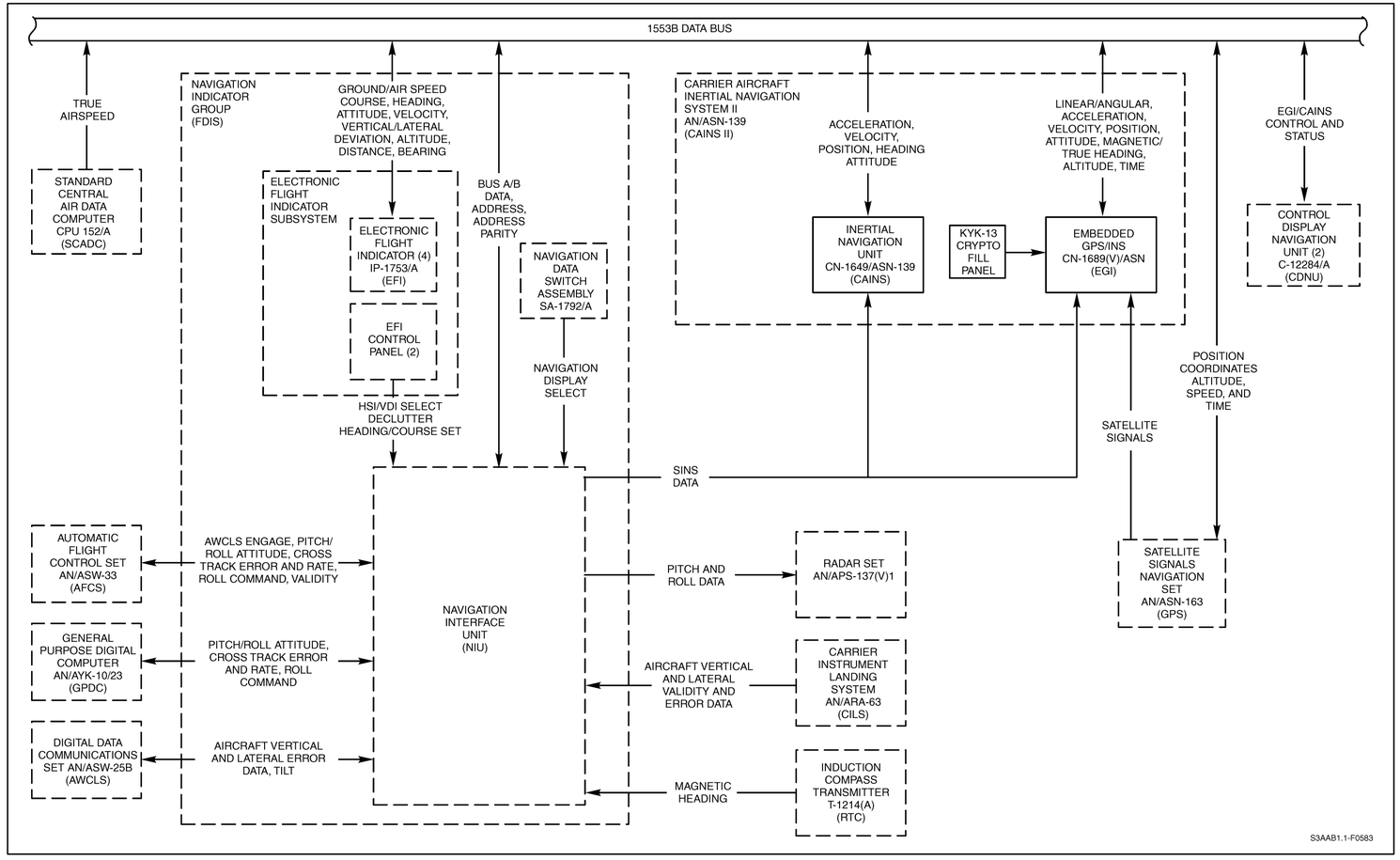

CAINS II Interface Diagram

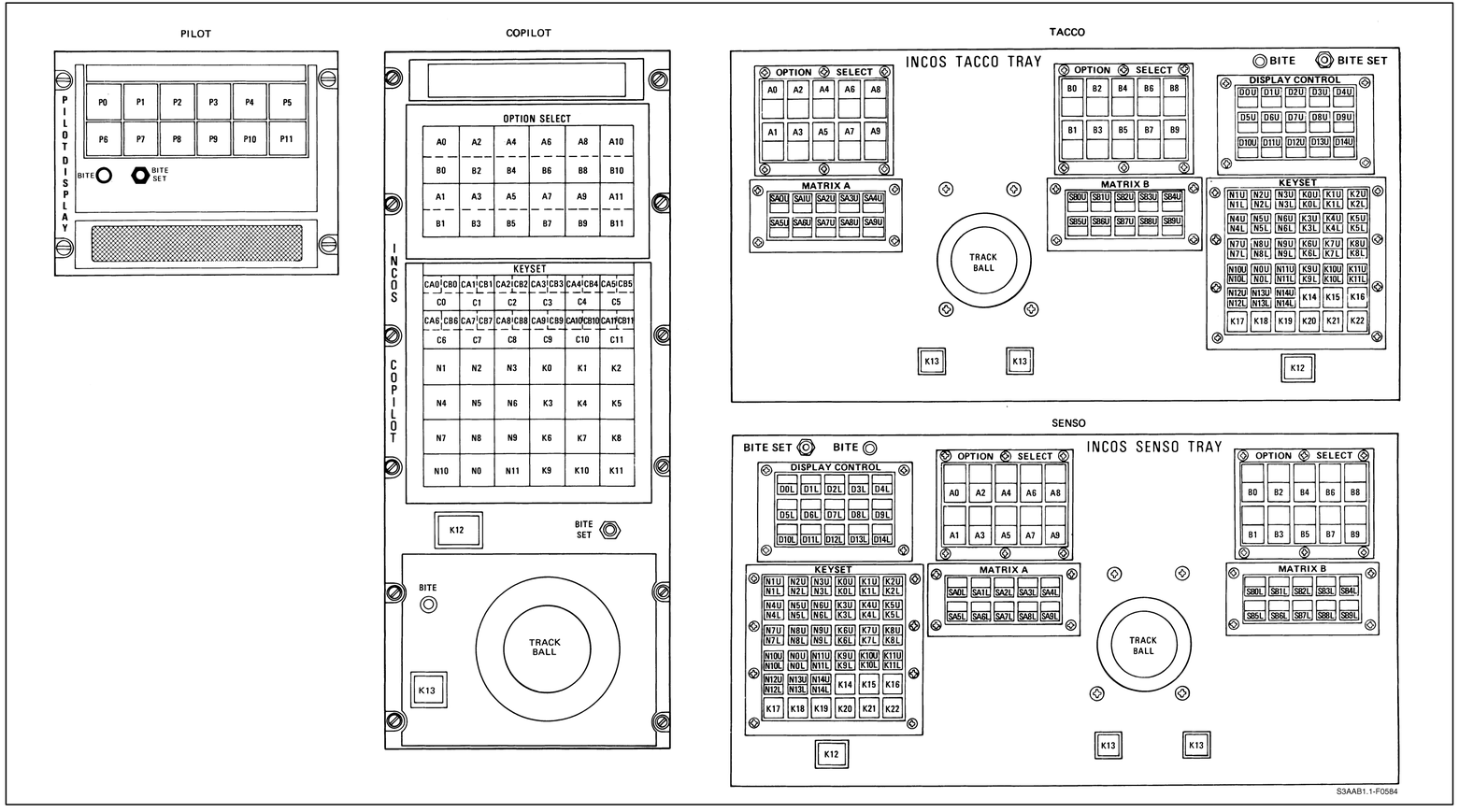

INCOS Tray Switch Designations

LIST OF EFFECTIVE PAGES

Effective Pages	Page Numbers
Original	1 (Reverse Blank)
Original	3 (Reverse Blank)
Original	5 (Reverse Blank)
Original	7 (Reverse Blank)
Original	9 (Reverse Blank)
Original	11 thru 23 (Reverse Blank)
Original	25 thru 31 (Reverse Blank)
Original	33 thru 49 (Reverse Blank)
Original	1-1 thru 1-121 (Reverse Blank)
Original	2-1 thru 2-119 (Reverse Blank)
Original	51 (Reverse Blank)
Original	3-1 thru 3-118
Original	53 (Reverse Blank)
Original	4-1 thru 4-33 (Reverse Blank)
Original	55 (Reverse Blank)
Original	5-1 thru 5-28
Original	57 (Reverse Blank)
Original	6-1 thru 6-77 (Reverse Blank)
Original	59 (Reverse Blank)
Original	7-1 thru 7-3 (Reverse Blank)
Original	61 (Reverse Blank)
Original	8-1 thru 8-36

Effective Pages	Page Numbers
Original	63 (Reverse Blank)
Original	9-1 thru 9-28
Original	65 (Reverse Blank)
Original	10-1 thru 10-84
Original	Index-1 thru Index-17 (Reverse Blank)
Original	FO-1 (Reverse Blank)
Original	FO-2 (Reverse Blank)
Original	FO-3 (Reverse Blank)
Original	FO-4 (Reverse Blank)
Original	FO-5 (Reverse Blank)
Original	FO-6 (Reverse Blank)
Original	FO-7 (Reverse Blank)
Original	FO-8 (Reverse Blank)
Original	FO-9 (Reverse Blank)
Original	FO-10 (Reverse Blank)
Original	FO-11 (Reverse Blank)
Original	FO-12 (Reverse Blank)
Original	FO-13 (Reverse Blank)
Original	FO-14 (Reverse Blank)
Original	FO-15 (Reverse Blank)
Original	FO-16 (Reverse Blank)
Original	LEP-1 (Reverse Blank)